SPARE PARTS PRICE LIST

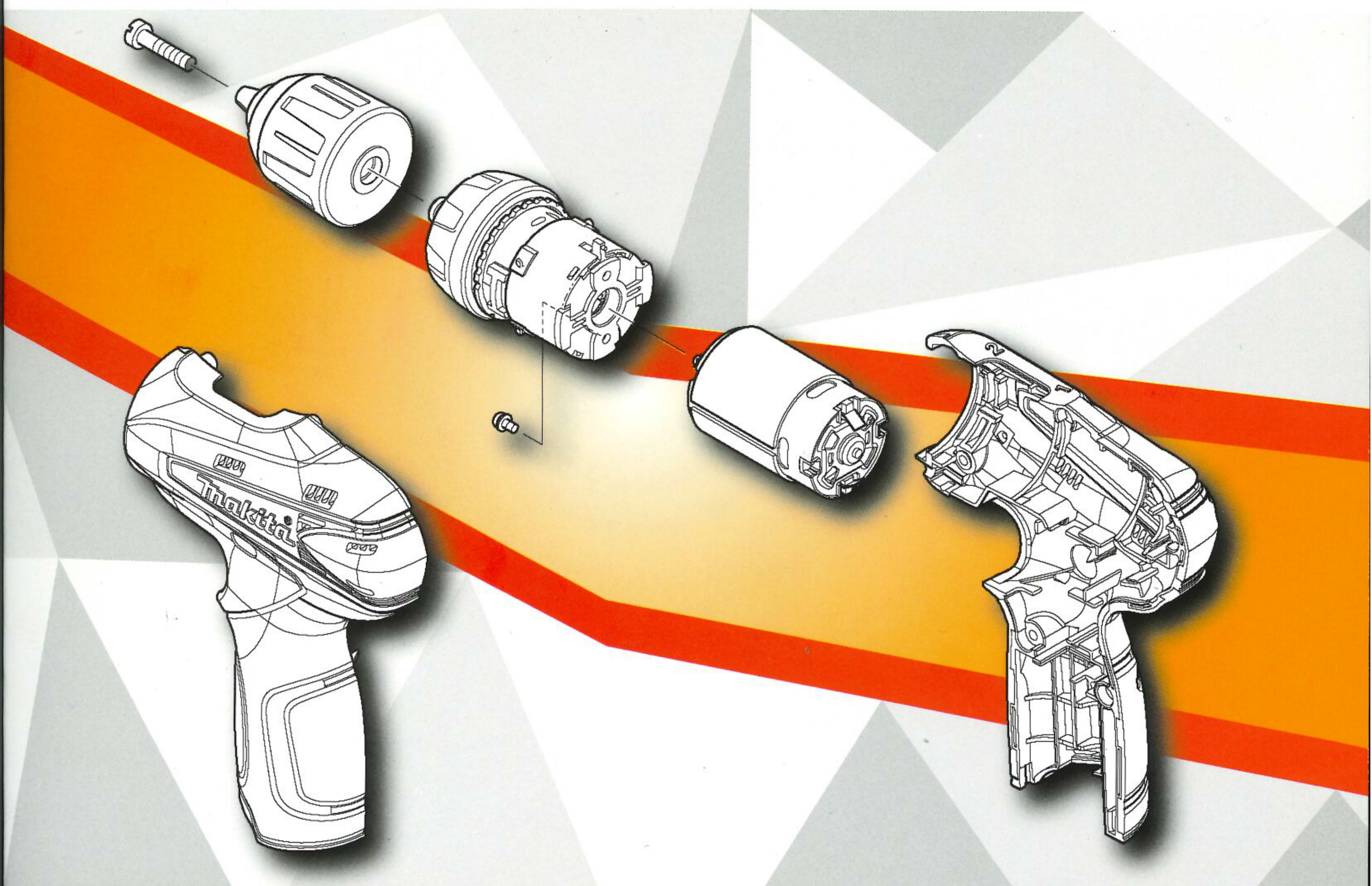

makita

2017 Ver.1

Professional Power Tools

SERVICE DRAWING

MODEL NO. 1100

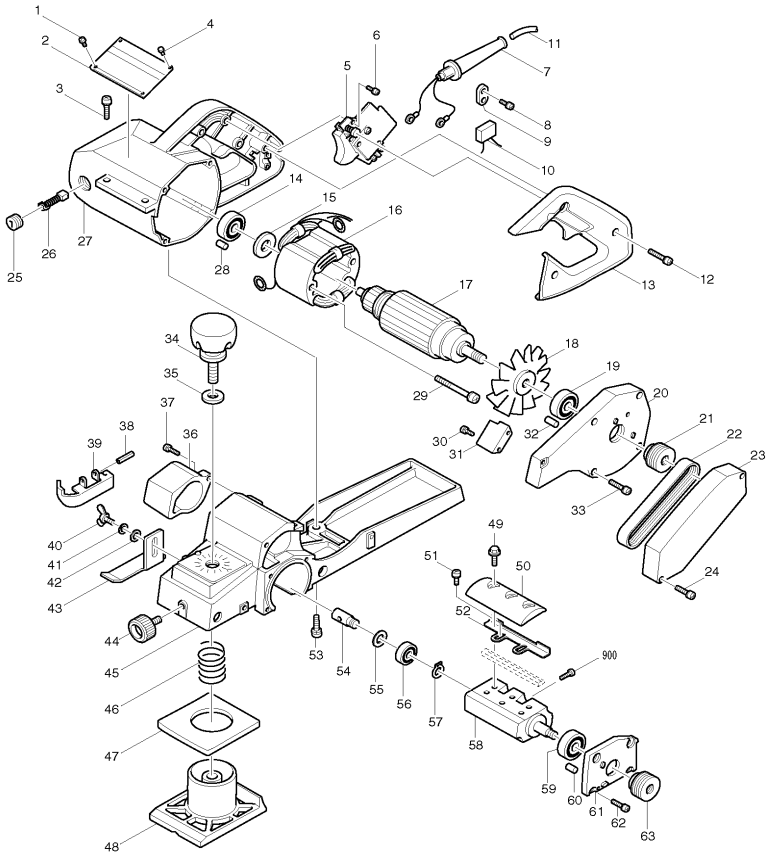

MODEL 1100

ITEM	PARTS ID	DESCRIPTION	PRICE/BAHT
001	911001-2	PAN HEAD SCREW M3X6	20
003	911228-4	PAN HEAD SCREW M5X18	40
004	953106-2	RIVET 0-5	20
005	651016-4	SWITCH HPAHR2-2	950
006	911101-8	PAN HEAD SCREW M4X6	20
007	682504-0	CORD GUARD 10-85	190
008	911133-5	PAN HEAD SCREW M4X18	50
009	687052-4	STRAIN RELIEF	80
011	691025-1	POWER SUPPLY CORD 0.75-2-5.0	1,070
012	911153-9	PAN HEAD SCREW M4X28	30
013	411632-2	HANDLE COVER	410
014	211068-3	BALL BEARING 6200LB	370
015	681623-9	INSULATION WASHER	80
016	523014-7	FIELD ASS'Y 220V	
017	513398-1	ARMATURE ASS'Y 220V	
019	211066-7	BALL BEARING 6200LLB	410
020	312246-9	BRACKET	1,240
021	222002-8	V-PULLEY 5-26.5L	410
022	A-86103	POLY V-BELT 5-285	660
023	411004-1	BELT COVER	320
024	911148-2	PAN HEAD SCREW M4X25	70
025	643600-9	BRUSH HOLDER CAP 6-10	70
026	B-80298	CARBON BRUSH SET CB-100A	
027	159529-4	MOTOR HOUSING	2,400
028	263013-4	RUBBER PIN 4	80
029	911290-9	PAN HEAD SCREW M5X65	100
030	911101-8	PAN HEAD SCREW M4X6	20
031	342148-5	BAFFLE COVER	80
032	263002-9	RUBBER PIN 4	30
033	911146-6	PAN HEAD SCREW M4X25	20
034	271226-3	KNOB 50	430
035	941251-5	FLAT WASHER 10	30
036	312004-3	CHIP COVER	390
037	911138-5	PAN HEAD SCREW M4X20	50
038	951131-7	SPRING PIN 4-40	50
039	342002-3	DRUM COVER	170
040	924206-5	WING BOLT M5X10	110
041	942101-7	SPRING WASHER 5	100
042	941101-4	FLAT WASHER 5	20
043	342001-5	DEPTH GUIDE	230
044	251804-5	SCREW M6X13	100
045	156510-6	MAIN FRAME	6,880
046	231001-9	COMPRESSION SPRING 17	150
047	421001-9	RUBBER PACKING	120
048	312002-7	FRONT BASE	1,700
049	251609-3	HEX. FLANGE HEAD BOLT M6X17	70
050	187676-1	DRUM PLATE SET	570
051	251246-3	+ PAN HEAD SCREW M4X5	30
052	345644-2	ADJUST PLATE	110
053	911228-4	PAN HEAD SCREW M5X18	40
054	323001-4	DRUM REAR SHAFT	320
055	253139-0	FLAT WASHER 8	50
056	211032-4	BALL BEARING 608ZZ	200
057	961004-6	RETAINING RING S-8	20
058	161048-8	DRUM	3,350
059	211107-9	BALL BEARING 6201ZZ	410
060	263005-3	RUBBER PIN 6	30
061	157022-2	DRUM HOUSING	620
062	911121-2	PAN HEAD SCREW M4X14	20
063	222001-0	V-PULLEY 5-29.4	470
400	934301-3	WING NUT M6	100
402	123004-6	SHARPENING HOLDER ASS'Y	250
403	251920-3	CAP SQUARE NECK BOLT M6X30	100
404	161046-2	GUIDE RULE	1,240
406	411086-3	GAUGE PLATE	100
407	911228-4	PAN HEAD SCREW M5X18	40
408	123062-2	BLADE GAUGE ASS'Y	230
411	181790-5	STEEL CARRYING CASE	5,000
412	793004-6	PLANER BLADE 82	1,150
413	794061-7	DRESSING STONE 150-1200	750

SERVICE DRAWING

MODEL NO. 1100N

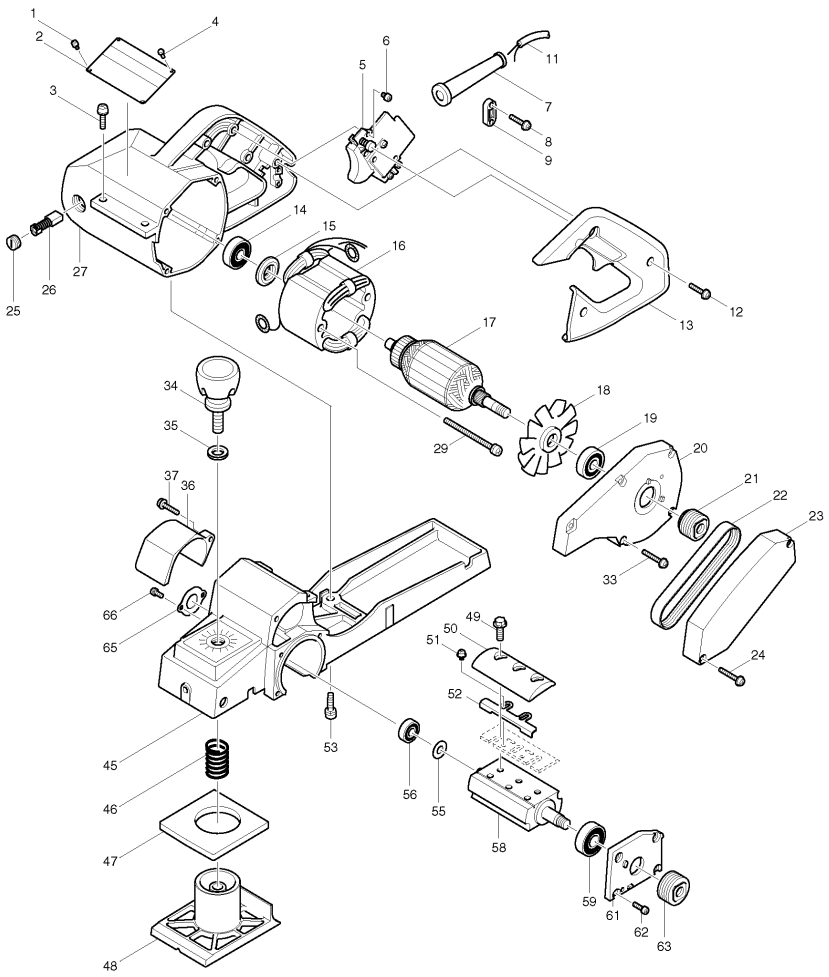

MODEL 1100N

ITEM	PARTS ID	DESCRIPTION	PRICE/BAHT
001	911001-2	PAN HEAD SCREW M3X6	20
003	911228-4	PAN HEAD SCREW M5X18	40
004	953106-2	RIVET 0-5	20
005	651016-4	SWITCH HPAHR2-2	950
006	911101-8	PAN HEAD SCREW M4X6	20
007	682504-0	CORD GUARD 10-85	190
008	911133-5	PAN HEAD SCREW M4X18	50
009	687053-2	STRAIN RELIEF	70
011	691025-1	POWER SUPPLY CORD 0.75-2-5.0	1,070
012	911153-9	PAN HEAD SCREW M4X28	30
013	411632-2	HANDLE COVER	410
014	211068-3	BALL BEARING 6200LB	370
015	681623-9	INSULATION WASHER	80
016	523014-7	FIELD ASS'Y 220V	
017	513398-1	ARMATURE ASS'Y 220V	
018	241001-1	FAN 80	
019	211066-7	BALL BEARING 6200LLB	410
020	417799-4	BRACKET	530
021	222002-8	V-PULLEY 5-26.5L	410
022	A-86103	POLY V-BELT 5-285	660
022	225087-3	POLY V BELT 5-285	710
023	411004-1	BELT COVER	320
024	911158-9	PAN HEAD SCREW M4X30	30
025	643600-9	BRUSH HOLDER CAP 6-10	70
026	B-80298	CARBON BRUSH SET CB-100A	
027	159529-4	MOTOR HOUSING	2,400
029	911290-9	PAN HEAD SCREW M5X65	100
033	911148-2	PAN HEAD SCREW M4X25	70
034	271226-3	KNOB 50	430
035	941251-5	FLAT WASHER 10	30
036	312004-3	CHIP COVER	390
037	911138-5	PAN HEAD SCREW M4X20	50
045	153320-2	MAIN FRAME COMPLETE	5,740
046	231001-9	COMPRESSION SPRING 17	150
047	421001-9	RUBBER PACKING	120
048	312002-7	FRONT BASE	1,700
049	251609-3	HEX. FLANGE HEAD BOLT M6X17	70
050	187676-1	DRUM PLATE SET	570
051	251246-3	+ PAN HEAD SCREW M4X5	30
052	345644-2	ADJUST PLATE	110
053	911228-4	PAN HEAD SCREW M5X18	40
055	253139-0	FLAT WASHER 8	50
056	211032-4	BALL BEARING 608ZZ	200
058	161138-7	DRUM	3,160
059	211107-9	BALL BEARING 6201ZZ	410
061	157022-2	DRUM HOUSING	620
062	911121-2	PAN HEAD SCREW M4X14	20
063	222001-0	V-PULLEY 5-29.4	470
065	285012-6	BEARING COVER 30	80
066	911111-5	PAN HEAD SCREW M4X10	30
A01	123004-6	SHARPENING HOLDER ASS'Y	250
A02	934301-3	WING NUT M6	100
A03	251920-3	CAP SQUARE NECK BOLT M6X30	100
A04	123062-2	BLADE GAUGE ASS'Y	230
A05	911228-4	PAN HEAD SCREW M5X18	40
A06	821202-3	WOOD CASE	4,260
A07	B-80298	CARBON BRUSH SET CB-100A	
A08	782209-3	SOCKET WRENCH 9	220
A09	A-83571	PLANER BLADE 82MM	950
A10	193617-7	GUIDE RULE SET	600
A11	411086-3	GAUGE PLATE	100

SERVICE DRAWING

MODEL NO. 1600

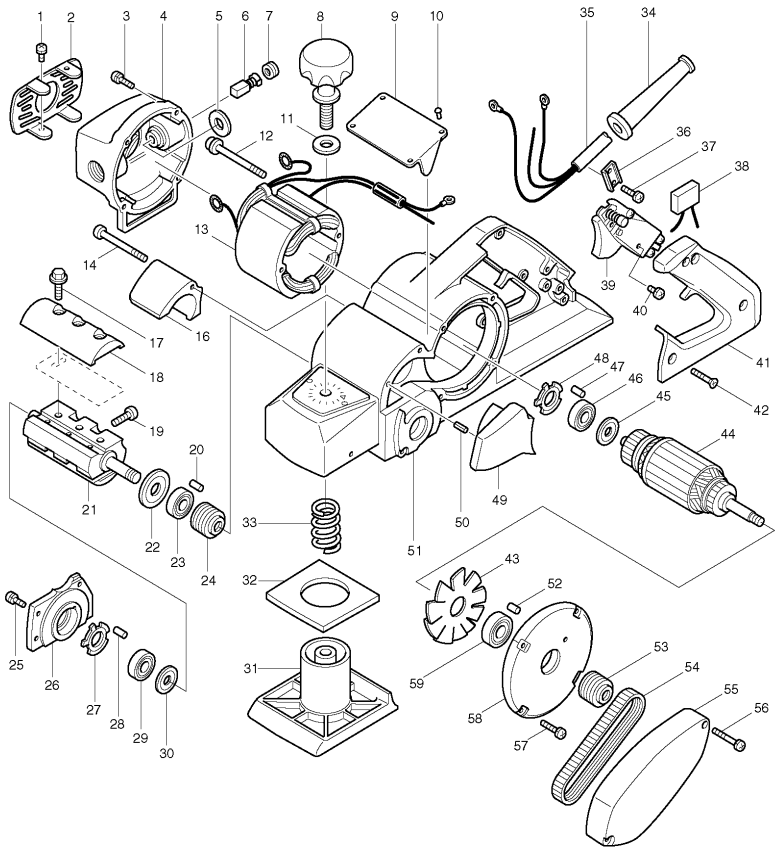

MODEL 1600

ITEM	PARTS ID	DESCRIPTION	PRICE/BAHT
001	911107-6	PAN HEAD SCREW M4X8	20
002	284046-6	REAR COVER	200
003	911126-2	PAN HEAD SCREW M4X16	30
004	156464-7	MOTOR REAR HOUSING	2,600
005	681001-3	INSULATION WASHER	30
006	B-80298	CARBON BRUSH SET CB-100A	
007	643600-9	BRUSH HOLDER CAP 6-10	70
008	271226-3	KNOB 50	430
009	811552-4	NAME PLATE 1600	190
010	953106-2	RIVET 0-5	20
011	941251-5	FLAT WASHER 10	30
012	911285-2	PAN HEAD SCREW M5X60	80
013	523014-7	FIELD ASS'Y 220V	
014	265012-2	+ PAN HEAD SCREW M5X55	610
016	312013-2	CHIP COVER	420
017	251609-3	HEX. FLANGE HEAD BOLT M6X17	70
018	187677-9	DRUM PLATE SET	550
019	251212-0	+ FLAT HEAD SCREW M5X13	40
020	263002-9	RUBBER PIN 4	30
021	161003-0	DRUM	3,070
022	213051-6	DUST SEAL 10	120
023	211066-7	BALL BEARING 6200LLB	410
024	222004-4	V-PULLEY 5-25	410
025	911121-2	PAN HEAD SCREW M4X14	20
026	156959-0	DRUM HOUSING	670
027	253935-6	PRELOAD WASHER 14	80
028	263002-9	RUBBER PIN 4	30
029	210042-8	BALL BEARING 629LLB	250
030	213052-4	DUST SEAL 9	120
031	312014-0	FRONT BASE	2,370
032	421003-5	RUBBER PACKING	150
033	231001-9	COMPRESSION SPRING 17	150
034	682505-8	CORD GUARD 10-90	150
035	691157-4	POWER SUPPLY CORD 0.75-3-5.0	1,530
036	687053-2	STRAIN RELIEF	70
037	911133-5	PAN HEAD SCREW M4X18	50
039	651016-4	SWITCH HPAHR2-2	950
040	911106-8	PAN HEAD SCREW M4X8	30
041	316566-3	HANDLE COVER	710
042	912156-6	COUNTERSUNK HEAD SCREW M4X3	50
044	513015-3	ARMATURE ASS'Y 220V	
045	213052-4	DUST SEAL 9	120
046	210042-8	BALL BEARING 629LLB	250
047	263002-9	RUBBER PIN 4	30
048	253935-6	PRELOAD WASHER 14	80
049	312008-5	BAFFLE COVER	530
050	951063-8	SPRING PIN 3-16	30
051	159688-4	MAIN FRAME COMPLETE	9,930
052	263002-9	RUBBER PIN 4	30
053	222003-6	V-PULLEY 5-25L	410
054	225002-7	POLY V-BELT 5-258	670
055	343225-6	BELT COVER	540
056	911156-3	PAN HEAD SCREW M4X30	30
057	911136-9	PAN HEAD SCREW M4X20	50
058	152193-0	BRACKET COMPLETE	1,000
059	211066-7	BALL BEARING 6200LLB	410
400	265709-3	SCREW M5X32	400
401	123007-0	SHARPENING HOLDER ASS'Y	540
403	A-07397	PLANER BLADE 80	2,250
406	762001-3	TRIANGULAR RULE	120
408	782209-3	SOCKET WRENCH 9	220
410	794061-7	DRESSING STONE 150-1200	750

SERVICE DRAWING

MODEL NO. 1804N

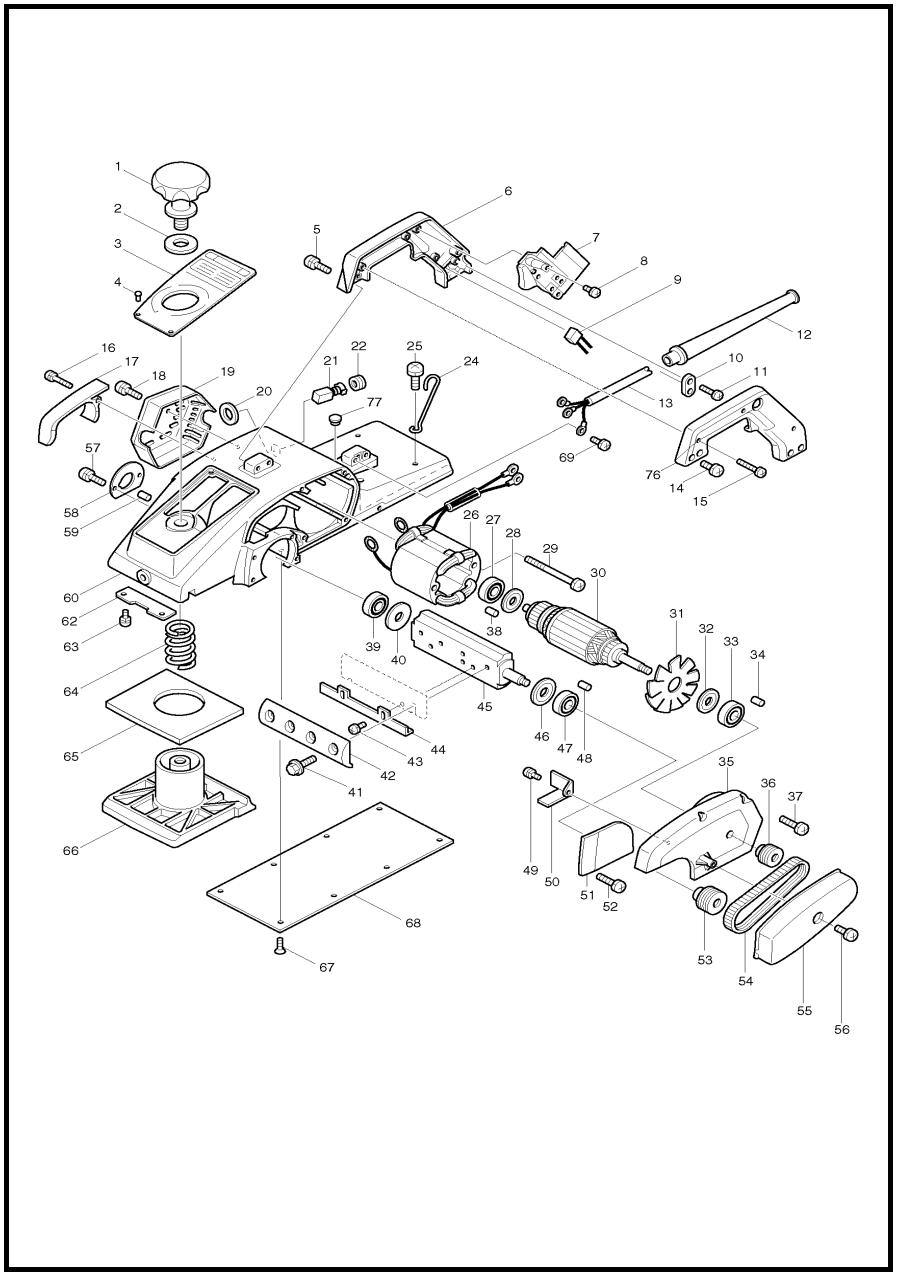

MODEL 1804N

ITEM	PARTS ID	DESCRIPTION	PRICE/BAHT
001	271249-1	KNOB 64	690
002	253004-3	FLAT WASHER 13	80
004	953106-2	RIVET 0-5	20
005	911213-7	PAN HEAD SCREW M5X12	40
006	181137-3	HANDLE SET	730
007	651030-0	SWITCH HPAHR2-2S	1,060
008	911101-8	PAN HEAD SCREW M4X6	20
010	687034-6	STRAIN RELIEF	80
011	911133-5	PAN HEAD SCREW M4X18	50
012	682507-4	CORD GUARD 12-200	160
013	691346-1	POWER SUPPLY CORD 1.25-3-5.0	1,770
014	911213-7	PAN HEAD SCREW M5X12	40
015	911158-9	PAN HEAD SCREW M4X30	30
016	911146-6	PAN HEAD SCREW M4X25	20
017	312884-7	CHIP COVER	340
018	911206-4	PAN HEAD SCREW M5X10	20
019	284040-8	REAR COVER	550
020	681002-1	INSULATION WASHER	30
021	B-80329	CARBON BRUSH SET CB-153A	
022	643650-4	BRUSH HOLDER CAP 6.5-13.5	70
024	281007-7	HOLDER	110
025	911324-8	PAN HEAD SCREW M6X16	50
026	523025-2	FIELD ASS'Y 220V	
027	211066-7	BALL BEARING 6200LLB	410
028	213051-6	DUST SEAL 10	120
029	911295-9	PAN HEAD SCREW M5X70	100
030	513145-0	ARMATURE ASS'Y 220V	
032	213102-5	DUST SEAL 12	130
033	211106-1	BALL BEARING 6201LLB	400
034	263005-3	RUBBER PIN 6	30
035	152213-0	BRACKET COMPLETE	1,470
036	222007-8	V-PULLEY 6-23L	400
037	911241-2	PAN HEAD SCREW M5X25	110
038	263002-9	RUBBER PIN 4	30
039	211067-5	BALL BEARING 6200ZZ	390
040	341376-9	WASHER 10	80
041	251609-3	HEX. FLANGE HEAD BOLT M6X17	70
042	187673-7	DRUM PLATE SET	730
043	251246-3	+ PAN HEAD SCREW M4X5	30
044	342193-0	ADJUST PLATE	170
045	161017-9	DRUM	4,290
046	341377-7	WASHER 12	100
047	211107-9	BALL BEARING 6201ZZ	410
048	263005-3	RUBBER PIN 6	30
049	911106-8	PAN HEAD SCREW M4X8	30
050	342489-9	BAFFLE PLATE	110
051	157023-0	DRUM HOUSING	690
052	911116-5	PAN HEAD SCREW M4X12	20
053	222006-0	V-PULLEY 6-30	470
054	A-86125	POLY V-BELT 6-285	730
055	343293-9	BELT COVER	440
056	911206-4	PAN HEAD SCREW M5X10	20
057	911206-4	PAN HEAD SCREW M5X10	20
058	285004-5	BEARING COVER 38	190
059	263002-9	RUBBER PIN 4	30
060	150811-4	MAIN FRAME	12,860
062	341374-3	GUIDE PLATE	80
063	911106-8	PAN HEAD SCREW M4X8	30
064	231233-8	COMPRESSION SPRING 24	170
065	421141-3	RUBBER PACKING	190
066	312885-5	FRONT BASE	2,640
067	912117-6	COUNTERSUNK HEAD SCREW M4X1	20
068	344583-3	BASE	1,100
069	652014-1	PAN HEAD SCREW M4X8	30
076	181137-3	HANDLE SET	730
077	286231-7	CAP 15	100
400	123006-2	SHARPENING HOLDER ASS'Y	460
404	911218-7	PAN HEAD SCREW M5X14	30
405	411111-0	GAUGE PLATE	170
406	251212-0	+ FLAT HEAD SCREW M5X13	40
407	123009-6	BLADE GAUGE ASS'Y	660
408	793011-9	PLANER BLADE 136	1,730
410	782209-3	SOCKET WRENCH 9	220
412	821080-1	WOODEN CARRYING CASE	5,930
900	251804-5	SCREW M6X13	100
905	164365-5	GUIDE RULE	1,150
906	794060-9	DRESSING STONE 180-1200	880

SERVICE DRAWING

MODEL NO. 1902

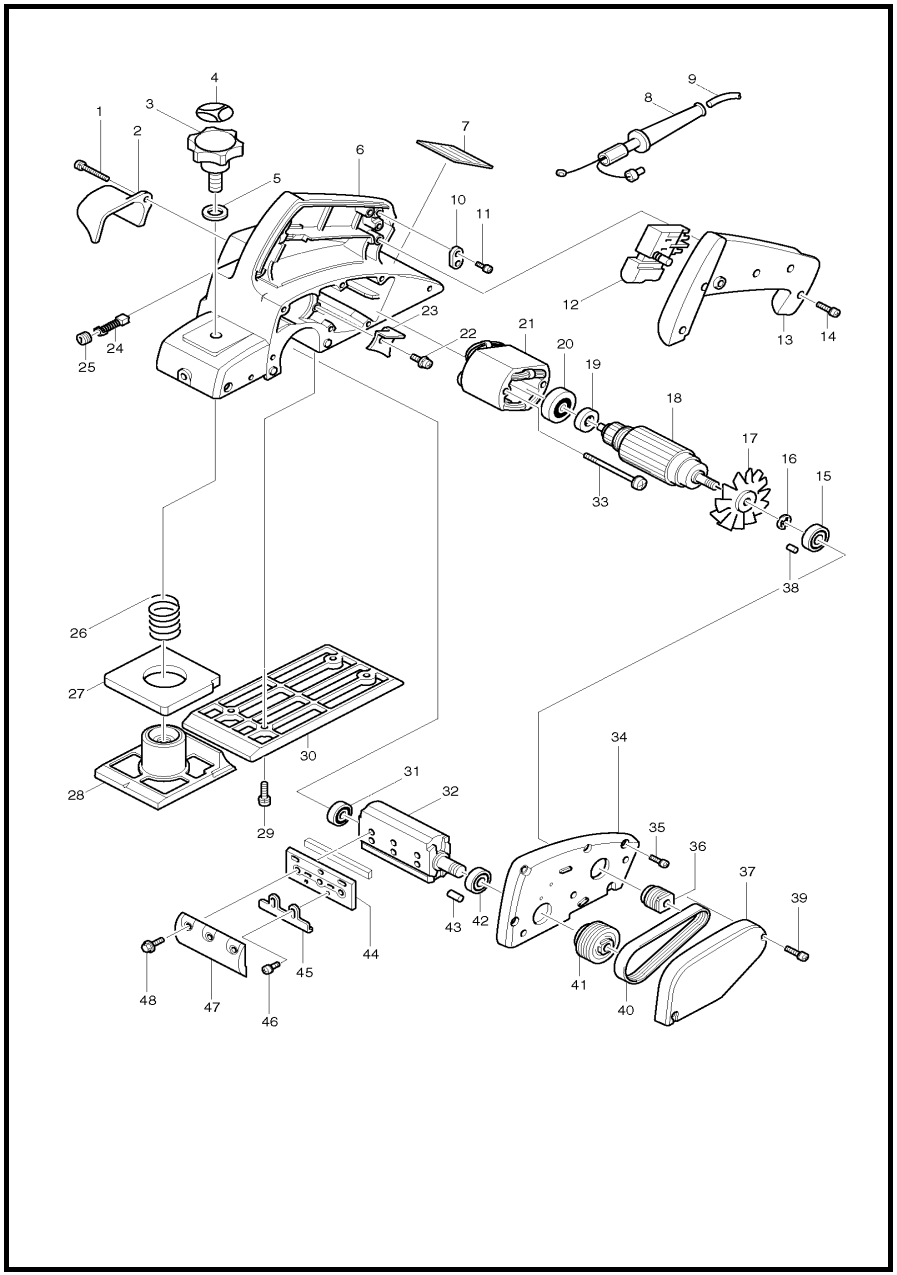

MODEL 1902

ITEM	PARTS ID	DESCRIPTION	PRICE/BAHT
001	911128-8	PAN HEAD SCREW M4X16	30
002	416523-2	CHIP COVER	160
003	271231-0	KNOB 46	250
004	812004-8	SCALE LABEL	50
005	941251-5	FLAT WASHER 10	30
006	159983-2	MAIN FRAME COMPLETE	2,420
007	859017-8	NAME PLATE 1902	80
008	682504-0	CORD GUARD 10-85	190
009	691015-4	POWER SUPPLY CORD 0.75-2-2.5	740
010	687053-2	STRAIN RELIEF	70
011	911133-5	PAN HEAD SCREW M4X18	50
012	651233-6	SWITCH SGEL106C	420
013	411170-4	HANDLE COVER	360
014	911148-2	PAN HEAD SCREW M4X25	70
015	211061-7	BALL BEARING 6000LLB	390
016	961015-1	STOP RING E-9	40
018	511938-9	ARMATURE ASS'Y 220V	
019	681614-0	INSULATION WASHER	80
020	211028-5	BALL BEARING 627LB	290
021	593118-9	FIELD ASS'Y 220V	
022	911128-8	PAN HEAD SCREW M4X16	30
023	411153-4	AUXILIARY BAFFLE PLATE	100
024	B-80232	CARBON BRUSH SET CB-51A	
025	643550-8	BRUSH HOLDER CAP 5-8	100
026	231004-3	COMPRESSION SPRING 18	130
027	421007-7	RUBBER PACKING	150
028	316963-3	FRONT BASE	1,150
029	911226-8	PAN HEAD SCREW M5X18	30
030	316964-1	BASE	900
031	211032-4	BALL BEARING 608ZZ	200
032	161061-6	DRUM	1,090
033	911586-8	PAN HEAD SCREW M4X60	80
034	152565-9	BRACKET COMPLETE	550
035	911148-2	PAN HEAD SCREW M4X25	70
036	222145-6	V-PULLEY 4-18L	230
037	411019-8	BELT COVER	250
038	263002-9	RUBBER PIN 4	30
039	911148-2	PAN HEAD SCREW M4X25	70
040	225071-8	POLY V-BELT 4-241	550
041	222146-4	V-PULLEY 4-38	400
042	211062-5	BALL BEARING 6000ZZ	360
043	263002-9	RUBBER PIN 4	30
044	343433-9	SET PLATE F/MINI BLADE	270
045	342430-2	ADJUST PLATE	100
046	251246-3	+ PAN HEAD SCREW M4X5	30
047	187679-5	DRUM PLATE SET	500
048	251609-3	HEX. FLANGE HEAD BOLT M6X17	70
A01	123062-2	BLADE GAUGE ASS'Y	230
A02	782209-3	SOCKET WRENCH 9	220
A03	A-82921	T.C.T. MINI PLANER BLADE	950
A04	123004-6	SHARPENING HOLDER ASS'Y	250

SERVICE DRAWING

MODEL NO. 1911B

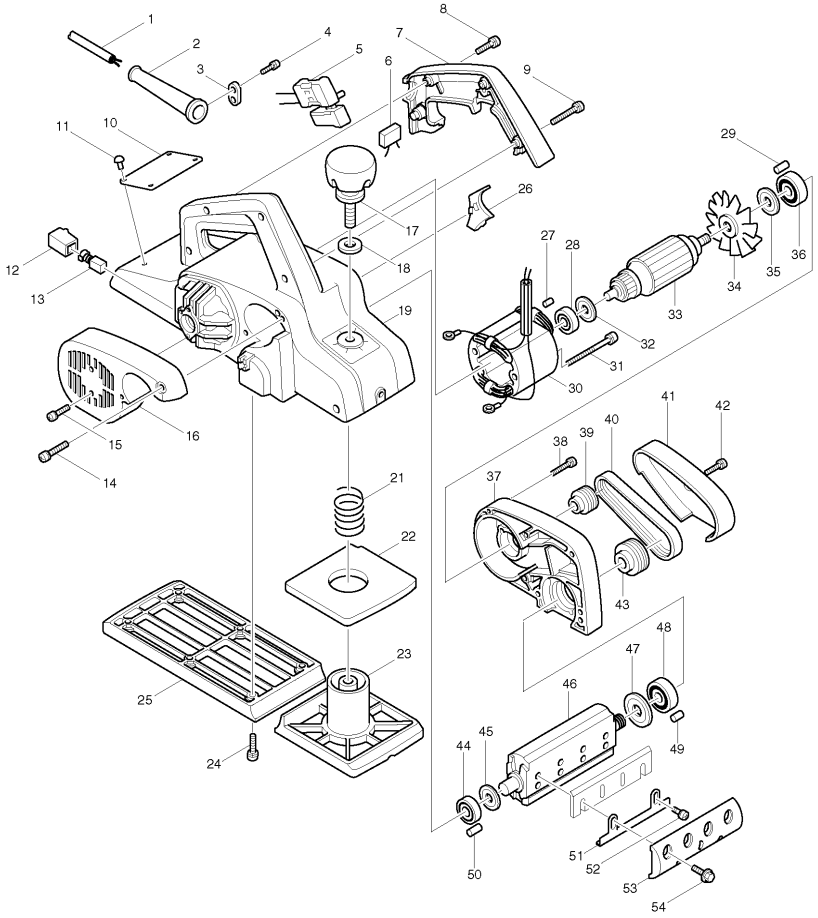

MODEL 1911B

ITEM	PARTS ID	DESCRIPTION	PRICE/BAHT
001	691227-9	POWER SUPPLY CORD 1.25-2-5.0	1,290
002	682504-0	CORD GUARD 10-85	190
003	687054-0	STRAIN RELIEF	50
004	911133-5	PAN HEAD SCREW M4X18	50
005	651204-3	SWITCH SGEL115CDY	420
007	411423-1	HANDLE COVER	400
008	911153-9	PAN HEAD SCREW M4X28	30
009	911168-6	PAN HEAD SCREW M4X40	40
011	953106-2	RIVET 0-5	20
012	643601-7	BRUSH HOLDER 6-10	150
013	B-80313	CARBON BRUSH SET CB-106A	
014	911168-6	PAN HEAD SCREW M4X40	40
015	911123-8	PAN HEAD SCREW M4X14	30
016	411425-7	REAR COVER	390
017	271226-3	KNOB 50	430
018	941251-5	FLAT WASHER 10	30
019	159336-5	MAIN FRAME	3,050
021	231004-3	COMPRESSION SPRING 18	130
022	421147-1	RUBBER PACKING	160
023	312951-8	FRONT BASE	2,150
024	911226-8	PAN HEAD SCREW M5X18	30
025	312952-6	REAR BASE	2,200
026	411428-1	BAFFLE PLATE	100
027	263014-2	RUBBER PIN 4	40
028	211031-6	BALL BEARING 608LLB	190
029	263002-9	RUBBER PIN 4	30
030	594488-9	FIELD ASS'Y 220V	
031	911295-9	PAN HEAD SCREW M5X70	100
032	681613-2	INSULATION WASHER	80
033	516083-5	ARMATURE ASS'Y 220V	
034	241519-2	FAN 68	340
035	213051-6	DUST SEAL 10	120
036	211066-7	BALL BEARING 6200LLB	410
037	152362-3	BRACKET	570
038	911158-9	PAN HEAD SCREW M4X30	30
039	222050-7	V-PULLEY 4-24L	390
040	225069-5	POLY V-BELT 4-272	670
041	411426-5	BELT COVER	210
042	911123-8	PAN HEAD SCREW M4X14	30
043	222063-8	V-PULLEY 4-38	470
044	211062-5	BALL BEARING 6000ZZ	360
045	341389-0	WASHER 10	110
046	161119-1	DRUM	3,150
047	341377-7	WASHER 12	100
048	211107-9	BALL BEARING 6201ZZ	410
049	263005-3	RUBBER PIN 6	30
050	263002-9	RUBBER PIN 4	30
051	341601-8	ADJUSTING PLATE	170
052	251246-3	+ PAN HEAD SCREW M4X5	30
053	344442-1	DRUM PLATE (2PCS/SET)	320
053	187674-5	DRUM PLATE SET	320
054	251609-3	HEX. FLANGE HEAD BOLT M6X17	70
055	232065-6	LEAF SPRING	80

ITEM	PARTS ID	DESCRIPTION	PRICE/BAHT
056	321346-4	PIN	150
057	961017-7	STOP RING E-3	20
058	321347-2	STOPPER PIN	320
059	231303-3	COMPRESSION SPRING 5	50
060	256714-1	PIN 2	50
061	252415-9	NUT N4-12	130
066	267012-8	FLAT WASHER 5	80
400	123055-9	SHARPENING HOLDER ASS'Y	250
404	123062-2	BLADE GAUGE ASS'Y	230
405	782209-3	SOCKET WRENCH 9	220
406	793008-8	PLANER BLADE 110	1,310

SERVICE DRAWING

MODEL NO. 2012NB

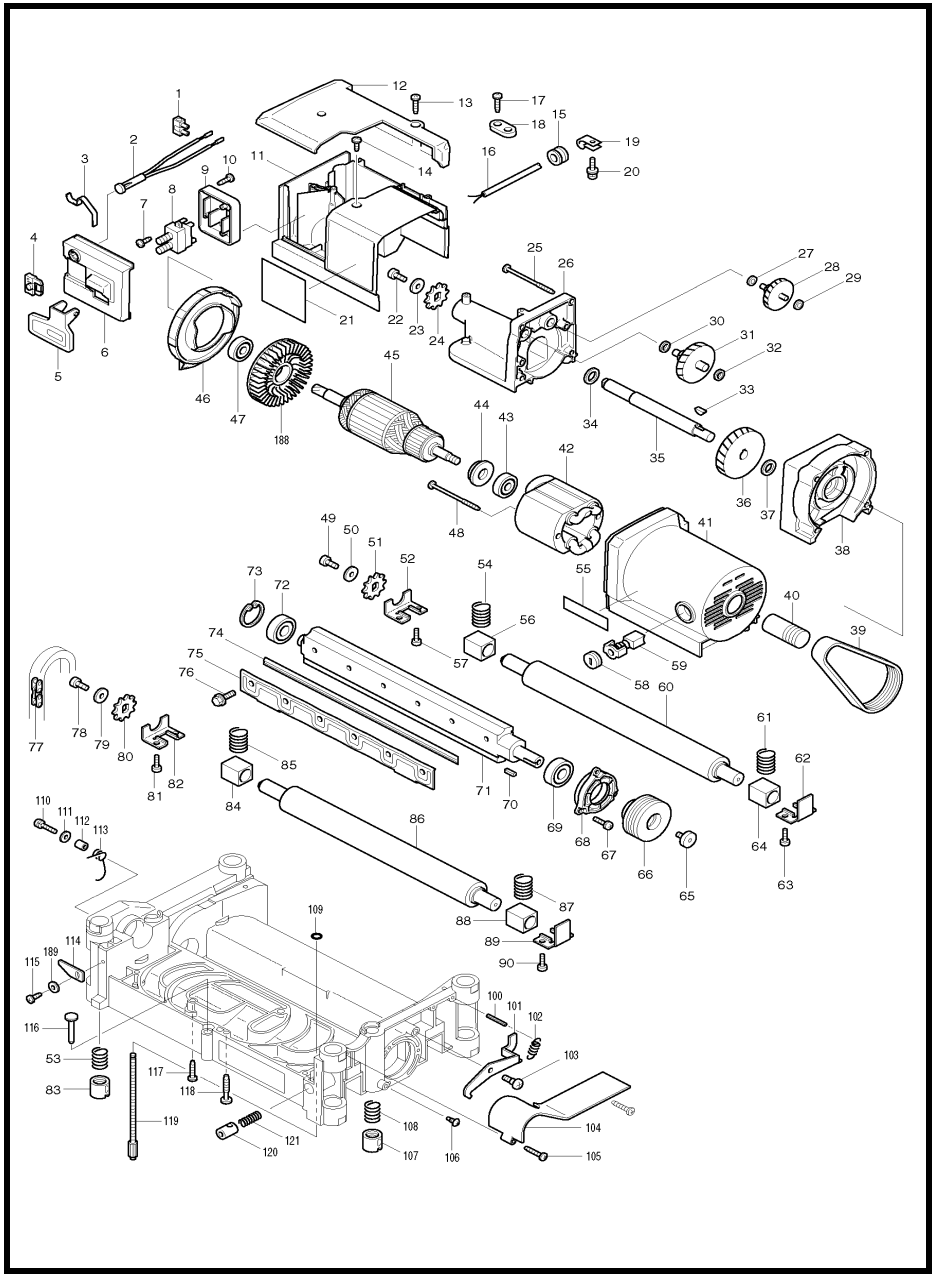

MODEL 2012NB

ITEM	PARTS ID	DESCRIPTION	PRICE/BAHT	ITEM	PARTS ID	DESCRIPTION	PRICE/BAHT
001	654561-8	TERMINAL BLOCK	260	057	922221-3	HEX. SOCKET HEAD BOLT M5X16	60
002	631371-0	PILOT LAMP COMPLETE	540	058	643650-4	BRUSH HOLDER CAP 6.5-13.5	70
005	417031-6	SWITCH LEVER	170	059	B-80329	CARBON BRUSH SET CB-153A	
006	417037-4	SWITCH COVER	250	060	162216-6	ROLLER 34-295	6,820
007	265954-0	TAPPING SCREW BIND PT3X8	40	061	231459-2	COMPRESSION SPRING 13	120
008	651529-5	SWITCH ELE115AY	1,200	062	341685-6	METAL COVER (A)	170
009	417044-7	SWITCH BASE	210	063	922221-3	HEX. SOCKET HEAD BOLT M5X16	60
010	266192-7	TAPPING SCREW 4X14	50	064	214251-1	PLANE BEARING 17	300
011	417041-3	SWITCH BOX	740	065	265854-4	HEX. SOCKET HEAD BOLT M6X12	340
012	417038-2	SWITCH BOX COVER	310	066	222154-5	V-PULLEY 8-54	500
013	265995-6	TAPPING SCREW 4X18	40	067	911128-8	PAN HEAD SCREW M4X16	30
014	266026-4	TAPPING SCREW BIND CT 4X12	30	068	317259-5	BEARING BOX	330
015	682539-1	GROMMET	80	069	211206-7	BALL BEARING 6202LLB	460
016	691015-4	POWER SUPPLY CORD 0.75-2-2.5	740	070	254204-8	KEY 4	80
017	265995-6	TAPPING SCREW 4X18	40	071	323928-8	DRUM	8,450
018	687053-2	STRAIN RELIEF	70	072	211206-7	BALL BEARING 6202LLB	460
019	687042-7	STRAIN RELIEF	80	073	962153-2	RETAINING RING R-35	80
020	911128-8	PAN HEAD SCREW M4X16	30	074	793350-7	PLANER BLADE 306	6,530
021	851968-1	NAME PLATE 2012NB	120	075	343692-5	SET PLATE	620
022	922312-0	HEX. SOCKET HEAD BOLT M6X12	110	076	251609-3	HEX. FLANGE HEAD BOLT M6X17	70
023	267080-1	FLAT WASHER 6	60	077	225520-5	CHAIN 35-46	690
024	221525-3	SPROCKET 10	110	078	922312-0	HEX. SOCKET HEAD BOLT M6X12	110
025	266059-9	TAPPING SCREW 5X75	150	079	267080-1	FLAT WASHER 6	60
026	151739-9	GEAR HOUSING COVER COMPLETE	1,240	080	221525-3	SPROCKET 10	110
027	253715-0	FLAT WASHER 6	60	081	922221-3	HEX. SOCKET HEAD BOLT M5X16	60
028	226134-3	GEAR COMPLETE 8-50	670	082	343844-8	METAL COVER (B)	180
029	253715-0	FLAT WASHER 6	60	083	252426-4	NUT M14	680
030	253215-0	FLAT WASHER 8	50	084	214251-1	PLANE BEARING 17	300
031	226135-1	GEAR COMPLETE 8-46	720	085	231459-2	COMPRESSION SPRING 13	120
032	253215-0	FLAT WASHER 8	50	086	162216-6	ROLLER 34-295	6,820
033	254001-2	WOODRUFF KEY 4	80	087	231459-2	COMPRESSION SPRING 13	120
034	253760-5	FLAT WASHER 14	70	088	214251-1	PLANE BEARING 17	300
035	323923-8	DRIVE SHAFT	1,090	089	341685-6	METAL COVER (A)	170
036	226518-5	HELICAL GEAR 47	660	090	922221-3	HEX. SOCKET HEAD BOLT M5X16	60
037	253744-3	FLAT WASHER 12	50	091	226786-0	STRAIGHT BEVEL GEAR 15	170
038	151738-1	GEAR HOUSING COMPLETE	1,190	092	253828-7	FLAT WASHER 10	80
039	225083-1	POLY V-BELT 8-341	830	093	417034-0	SHAFT RETAINER	110
040	222155-3	V-PULLEY 8-23.5L	510	094	266040-0	TAPPING SCREW CT 4X25	50
041	151737-3	MOTOR HOUSING COMPLETE	1,230	095	323926-2	SHAFT 10	470
042	526103-7	FIELD ASS'Y 220V		096	417034-0	SHAFT RETAINER	110
043	211087-9	BALL BEARING 6200DDW	380	097	266040-0	TAPPING SCREW CT 4X25	50
044	681623-9	INSULATION WASHER	80	098	253828-7	FLAT WASHER 10	80
045	516813-4	ARMATURE ASS'Y 220-240V		099	226786-0	STRAIGHT BEVEL GEAR 15	170
046	417033-2	BAFFLE PLATE	170	100	951122-8	SPRING PIN 4-28	50
047	211087-9	BALL BEARING 6200DDW	380	101	344815-8	LOCK PLATE	110
048	266059-9	TAPPING SCREW 5X75	150	102	231793-0	TENSION SPRING 5	170
049	922312-0	HEX. SOCKET HEAD BOLT M6X12	110	103	251283-7	+ PAN HEAD SCREW M5	130
050	267080-1	FLAT WASHER 6	60	104	417035-8	BELT COVER	130
051	221525-3	SPROCKET 10	110	105	266040-0	TAPPING SCREW CT 4X25	50
052	343844-8	METAL COVER (B)	180	106	251322-3	+ PAN HEAD SCREW M5X12	80
053	233016-2	COMPRESSION SPRING 15	530	107	252427-2	NUT M14L	680
054	231459-2	COMPRESSION SPRING 13	120	108	233016-2	COMPRESSION SPRING 15	530
056	214251-1	PLANE BEARING 17	300	109	213009-5	O RING 4	20

SERVICE DRAWING

MODEL NO. 2012NB

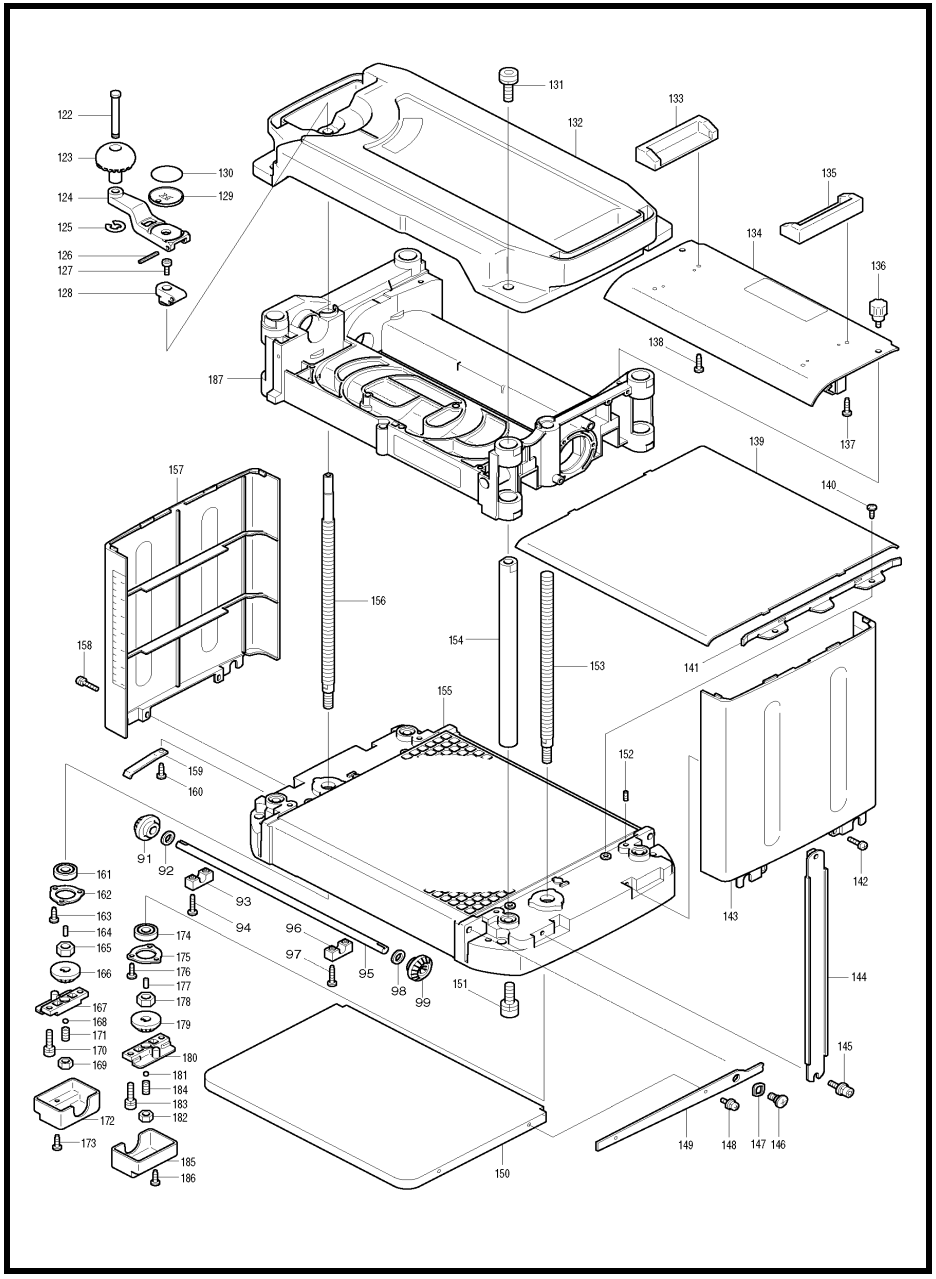

MODEL 2012NB

ITEM	PARTS ID	DESCRIPTION	PRICE/BAHT
110	911233-1	PAN HEAD SCREW M5X20	30
111	253194-2	FLAT WASHER 5	80
112	257600-9	SLEEVE 6	120
113	231588-1	TORSION SPRING 9	100
114	344068-9	POINTER	180
115	266026-4	TAPPING SCREW BIND CT 4X12	30
116	322229-1	GAUGE	140
117	266040-0	TAPPING SCREW CT 4X25	50
118	266173-1	TAPPING SCREW 5X30	60
119	265736-0	SCREW M6X135	420
120	323927-0	HALF NUT	370
121	231226-5	COMPRESSION SPRING 11	80
122	256688-6	PIN 8	300
123	271296-2	KNOB 45	210
124	272028-0	HANDLE 160	280
125	961012-7	STOP RING E-6	20
126	951122-8	SPRING PIN 4-28	50
127	266086-6	HEX. SOCKET HEAD BOLT M5X16	80
128	317760-0	JOINT	170
129	417032-4	GAUGE	150
130	816358-5	SCALE LABEL	70
131	266240-2	HEX. SOCKET HEAD BOLT M10X25	160
132	153781-6	TOP COVER COMPLETE	2,500
133	417036-6	TOOL BOX HOLDER	240
134	165379-7	CHIP COVER	650
135	417036-6	TOOL BOX HOLDER	240
136	265716-6	SCREW M5X10	180
137	265995-6	TAPPING SCREW 4X18	40
138	265995-6	TAPPING SCREW 4X18	40
139	344816-6	TABLE PLATE	1,110
140	266026-4	TAPPING SCREW BIND CT 4X12	30
141	344819-0	GUIDE PLATE	170
142	911128-8	PAN HEAD SCREW M4X16	30
143	417040-5	SIDE COVER	710
144	344820-5	SIDE BEAM	220
145	922323-5	HEX.SOCKET HEAD BOLT M6X16	80
146	251217-0	+ BINDING HEAD SCREW M8	150
147	253932-2	WAVE WASHER 10	30
148	911108-4	PAN HEAD SCREW M4X8	20
149	344818-2	ARM	150
150	344817-4	SUB TABLE PLATE	650
151	266240-2	HEX. SOCKET HEAD BOLT M10X25	160
152	266213-5	H.S.SET SCREW(FLAT POINT)M5X12	110
153	323925-4	SCREW L	860
154	331562-0	COLUMN 20	890
155	317763-4	TABLE	4,220
156	323924-6	SCREW R	1,190
157	151886-6	SIDE COVER COMPLETE	570
158	911128-8	PAN HEAD SCREW M4X16	30
159	232195-3	LEAF SPRING	110
160	266026-4	TAPPING SCREW BIND CT 4X12	30
161	211088-7	BALL BEARING 6000DDW	300
162	285698-6	BEARING RETAINER 33	110
163	266026-4	TAPPING SCREW BIND CT 4X12	30
164	256226-4	PIN 4	50
165	252164-8	HEX.NUT M10-17	100
166	226791-7	STRAIGHT BEVEL GEAR 15	250
167	317260-0	SUPPORTER	310
168	216011-7	STEEL BALL 5.6	20
169	931403-6	HEX. NUT M8	50
170	922231-0	HEX. SOCKET HEAD BOLT M5X20	40
171	265846-3	H.S.SET SCREW(CUP POINT)M8X16	50
172	417030-8	GEAR COVER	180
173	266026-4	TAPPING SCREW BIND CT 4X12	30
174	211088-7	BALL BEARING 6000DDW	300
175	285698-6	BEARING RETAINER 33	110
176	266026-4	TAPPING SCREW BIND CT 4X12	30
177	256226-4	PIN 4	50
178	252164-8	HEX.NUT M10-17	100
179	226791-7	STRAIGHT BEVEL GEAR 15	250
180	317260-0	SUPPORTER	310
181	216011-7	STEEL BALL 5.6	20
182	931403-6	HEX. NUT M8	50
183	922231-0	HEX. SOCKET HEAD BOLT M5X20	40
184	265846-3	H.S.SET SCREW(CUP POINT)M8X16	50
185	417030-8	GEAR COVER	180
186	266026-4	TAPPING SCREW BIND CT 4X12	30
187	317762-6	MAIN FRAME	4,730
188	240003-4	FAN 80	260
189	941051-3	FLAT WASHER 4	20
190	911104-2	PAN HEAD SCREW M4X6	30
A01	762014-4	MAGNETIC HOLDER	390
A02	782203-5	SOCKET WRENCH 9	390
A03	783208-8	HEX. WRENCH 2.5	80
A04	762016-0	BLADE GAUGE	320
A08	824002-0	PLASTIC CASE	270

SERVICE DRAWING

MODEL NO. 2107F

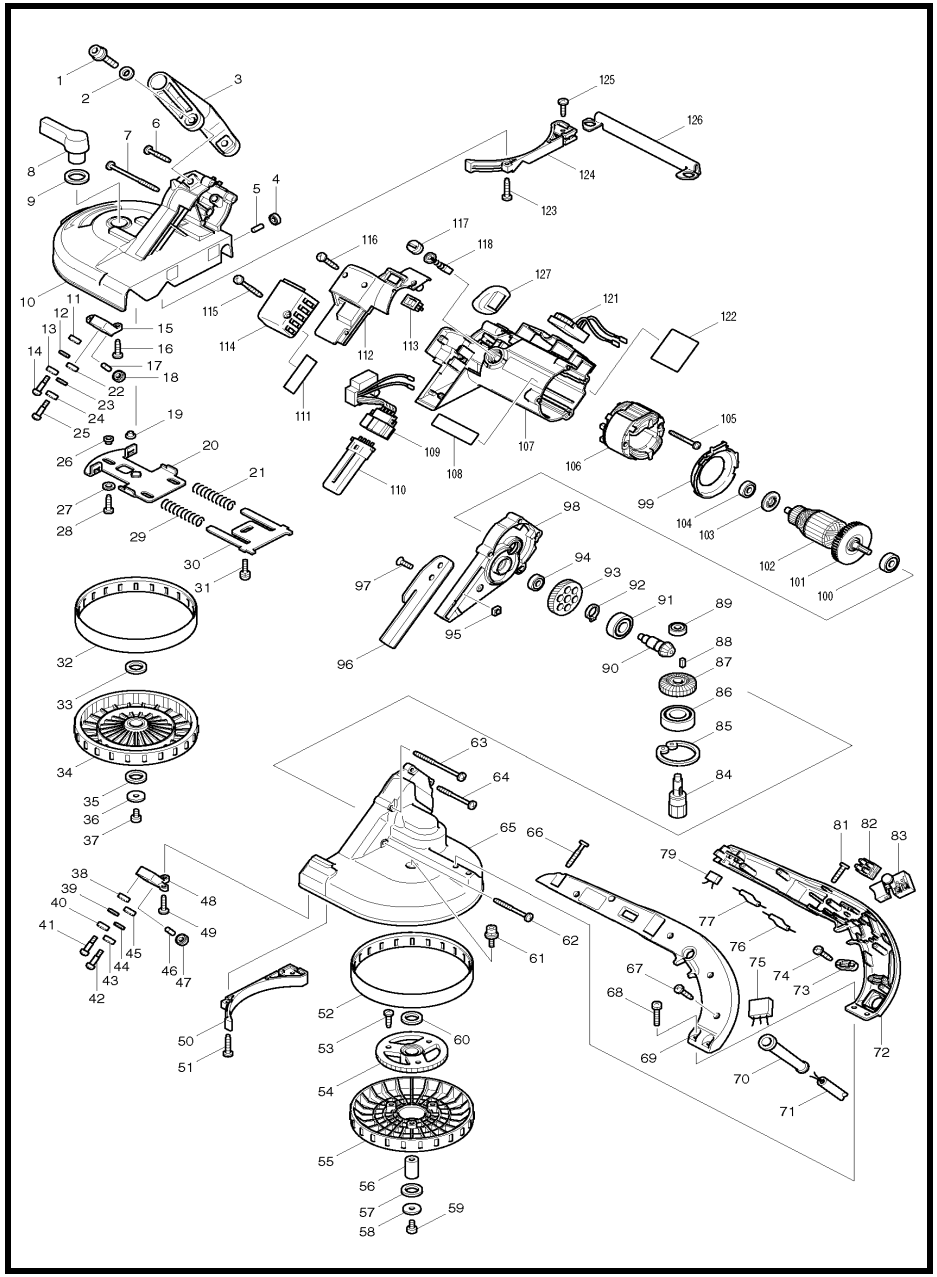

MODEL 2107F

ITEM	PARTS ID	DESCRIPTION	PRICE/BAHT	ITEM	PARTS ID	DESCRIPTION	PRICE/BAHT
001	922456-6	HEX. SOCKET HEAD BOLT M8X35	110	054	140140-3	GEAR COMPLETE	1,120
002	941202-8	FLAT WASHER 8	50	055	419506-1	WHEEL	760
003	273614-0	GRIP	450	056	324513-0	LOWER SHAFT	480
004	210033-9	BALL BEARING 696ZZ	150	057	253749-3	FLAT WASHER 16	80
005	256033-5	PIN 6	80	058	253010-8	FLAT WASHER 6	50
006	265999-8	TAPPING SCREW 4X25	30	059	922312-0	HEX. SOCKET HEAD BOLT M6X12	110
007	266147-2	TAPPING SCREW 4X55	100	060	253749-3	FLAT WASHER 16	80
008	272223-2	LEVER 60	530	061	922323-5	HEX.SOCKET HEAD BOLT M6X16	80
009	267041-1	FLAT WASHER 20	80	062	266203-8	TAPPING SCREW BIND CT 4X40	80
010	158702-3	FRONT WHEEL COVER COMPLETE	3,510	063	266147-2	TAPPING SCREW 4X55	100
011	210033-9	BALL BEARING 696ZZ	150	064	266048-4	TAPPING SCREW 4X40	60
012	941152-7	FLAT WASHER 6	50	065	317847-8	REAR WHEEL COVER	3,400
013	210033-9	BALL BEARING 696ZZ	150	066	265995-6	TAPPING SCREW 4X18	40
014	251337-0	+ PAN HEAD SCREW M5	100	067	265995-6	TAPPING SCREW 4X18	40
015	317824-0	UPPER HOLDER	440	068	911243-8	PAN HEAD SCREW M5X25	30
016	266034-5	TAPPING SCREW CT 4X16	50	069	183869-8	HANDLE SET	990
017	256033-5	PIN 6	80	070	682573-1	CORD GUARD 10	80
018	210033-9	BALL BEARING 696ZZ	150	071	691015-4	POWER SUPPLY CORD 0.75-2-2.5	740
019	343494-9	SLEEVE 5	100	072	183869-8	HANDLE SET	990
020	163276-1	SLIDE PLATE	930	073	687053-2	STRAIN RELIEF	70
021	231449-5	COMPRESSION SPRING 11	120	074	265995-6	TAPPING SCREW 4X18	40
022	210033-9	BALL BEARING 696ZZ	150	081	266042-6	TAPPING SCREW BIND CT 4X20	50
023	941152-7	FLAT WASHER 6	50	082	654531-7	TERMINAL BLOCK 2P	190
024	210033-9	BALL BEARING 696ZZ	150	083	651284-9	SWITCH SGEL115CDY-6	610
025	251337-0	+ PAN HEAD SCREW M5	100	084	227139-6	SPUR GEAR 8	1,150
026	343494-9	SLEEVE 5	100	085	962203-3	RETAINING RING R-47	120
027	941051-3	FLAT WASHER 4	20	086	211306-3	BALL BEARING 6204LLB	570
028	266034-5	TAPPING SCREW CT 4X16	50	087	227470-0	SPIRAL BEVEL GEAR 29	610
029	231449-5	COMPRESSION SPRING 11	120	088	254202-2	KEY 4	90
030	343489-2	TENSION PLATE	270	089	210029-0	BALL BEARING 608ZZ	130
031	911221-8	PAN HEAD SCREW M5X16	30	090	227481-5	SPIRAL BEVEL GEAR 11	1,080
032	421333-4	RUBBER TIRE	530	091	211241-5	BALL BEARING 6202DDW	180
033	253749-3	FLAT WASHER 16	80	092	961055-9	RETAINING RING S-15	50
034	152325-9	WHEEL COMPLETE	1,470	093	226593-1	HELICAL GEAR 64	570
035	253749-3	FLAT WASHER 16	80	094	210029-0	BALL BEARING 608ZZ	130
036	253010-8	FLAT WASHER 6	50	095	252157-5	SQUARE NUT M6	30
037	922312-0	HEX. SOCKET HEAD BOLT M6X12	110	096	345467-8	STOPPER PLATE	160
038	210033-9	BALL BEARING 696ZZ	150	097	251981-3	HEX. SOCKET HEAD BOLT M6X16	50
039	941152-7	FLAT WASHER 6	50	098	154475-6	GEAR HOUSING COMPLETE	2,030
040	210033-9	BALL BEARING 696ZZ	150	099	418785-8	BAFFLE PLATE	150
041	251337-0	+ PAN HEAD SCREW M5	100	100	211092-6	BALL BEARING 629DDW	330
042	251337-0	+ PAN HEAD SCREW M5	100	101	241850-6	FAN 60	210
043	210033-9	BALL BEARING 696ZZ	150	102	513583-6	ARMATURE ASS'Y 220-240V	
044	941152-7	FLAT WASHER 6	50	103	681644-1	INSULATION WASHER	60
045	210033-9	BALL BEARING 696ZZ	150	104	210029-0	BALL BEARING 608ZZ	130
046	256033-5	PIN 6	80	105	266056-5	TAPPING SCREW 5X45	110
047	210033-9	BALL BEARING 696ZZ	150	106	599032-7	FIELD ASS'Y 220-240V	
048	317823-2	LOWER HOLDER	440	107	154472-2	MOTOR HOUSING COMPLETE	1,930
049	266034-5	TAPPING SCREW CT 4X16	50	109	631641-7	LIGHT CIRCUIT	2,050
050	418784-0	SAW GUARD HOLDER	270	110	193730-1	FLUORESCENT LIGHT SET	290
051	266042-6	TAPPING SCREW BIND CT 4X20	50	111	418850-3	LENZ	110
052	421333-4	RUBBER TIRE	530	112	418782-4	LAMP COVER	330
053	266021-4	TAPPING SCREW 5X20	60	113	651514-8	SWITCH SLE6A	300

SERVICE DRAWING

MODEL NO. 2107F

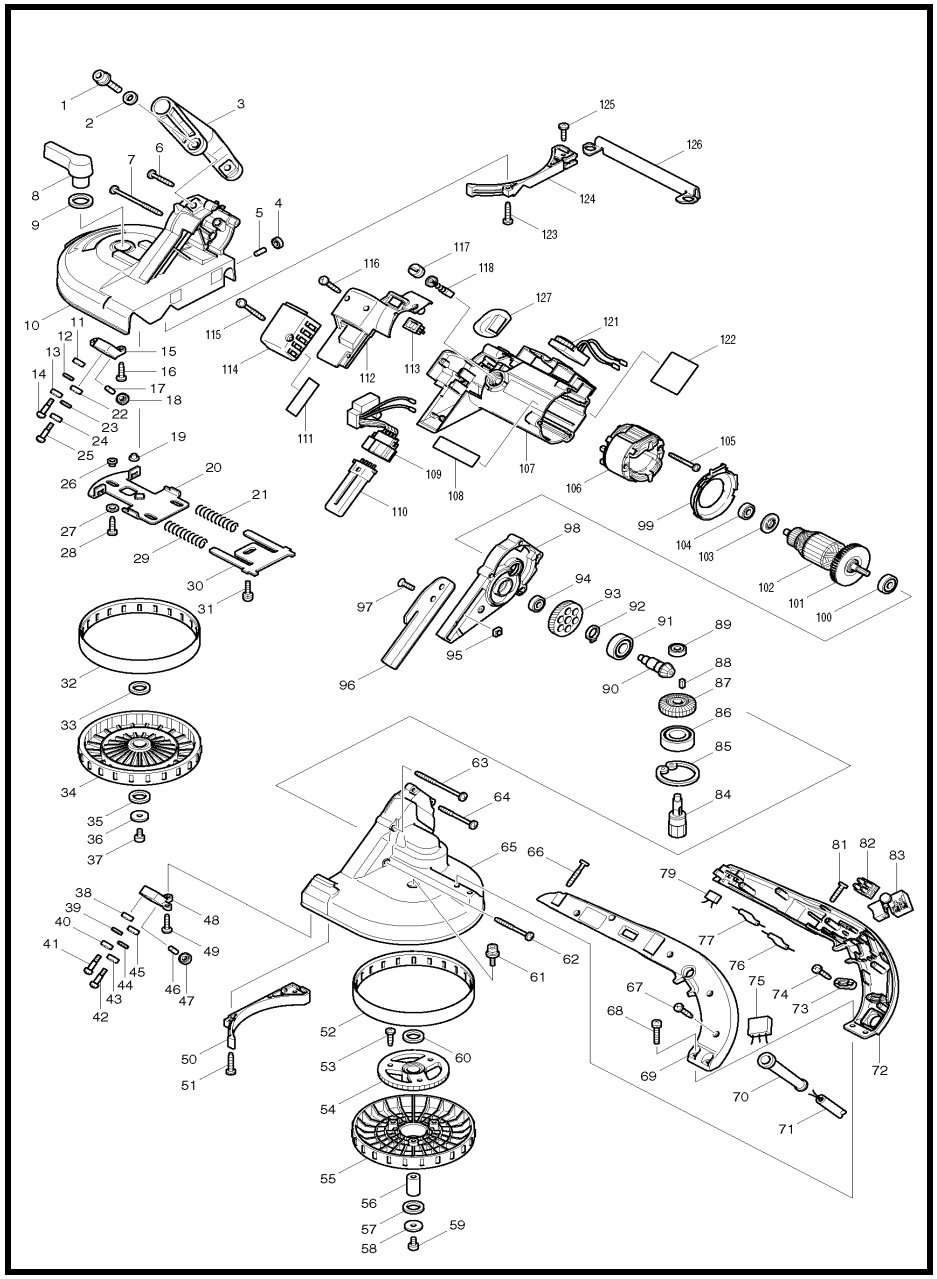

MODEL 2107F

ITEM	PARTS ID	DESCRIPTION	PRICE/BAHT
114	418783-2	LAMP BOX	230
115	266048-4	TAPPING SCREW 4X40	60
116	265935-4	TAPPING SCREW 3X20	20
117	643750-0	BRUSH HOLDER CAP	70
118	B-80379	CARBON BRUSH SET CB-303A	190
121	631639-4	CONTROLLER	1,700
123	266042-6	TAPPING SCREW BIND CT 4X20	50
124	418784-0	SAW GUARD HOLDER	270
125	266034-5	TAPPING SCREW CT 4X16	50
126	346669-9	SAW GUARD	190
127	421885-5	CAP	200
A01	410048-8	WRENCH HOLDER 3.4	50
A02	792559-8	BAND SAW BLADE 18 (C.STEEL)	2,940

SERVICE DRAWING

MODEL NO. 2414

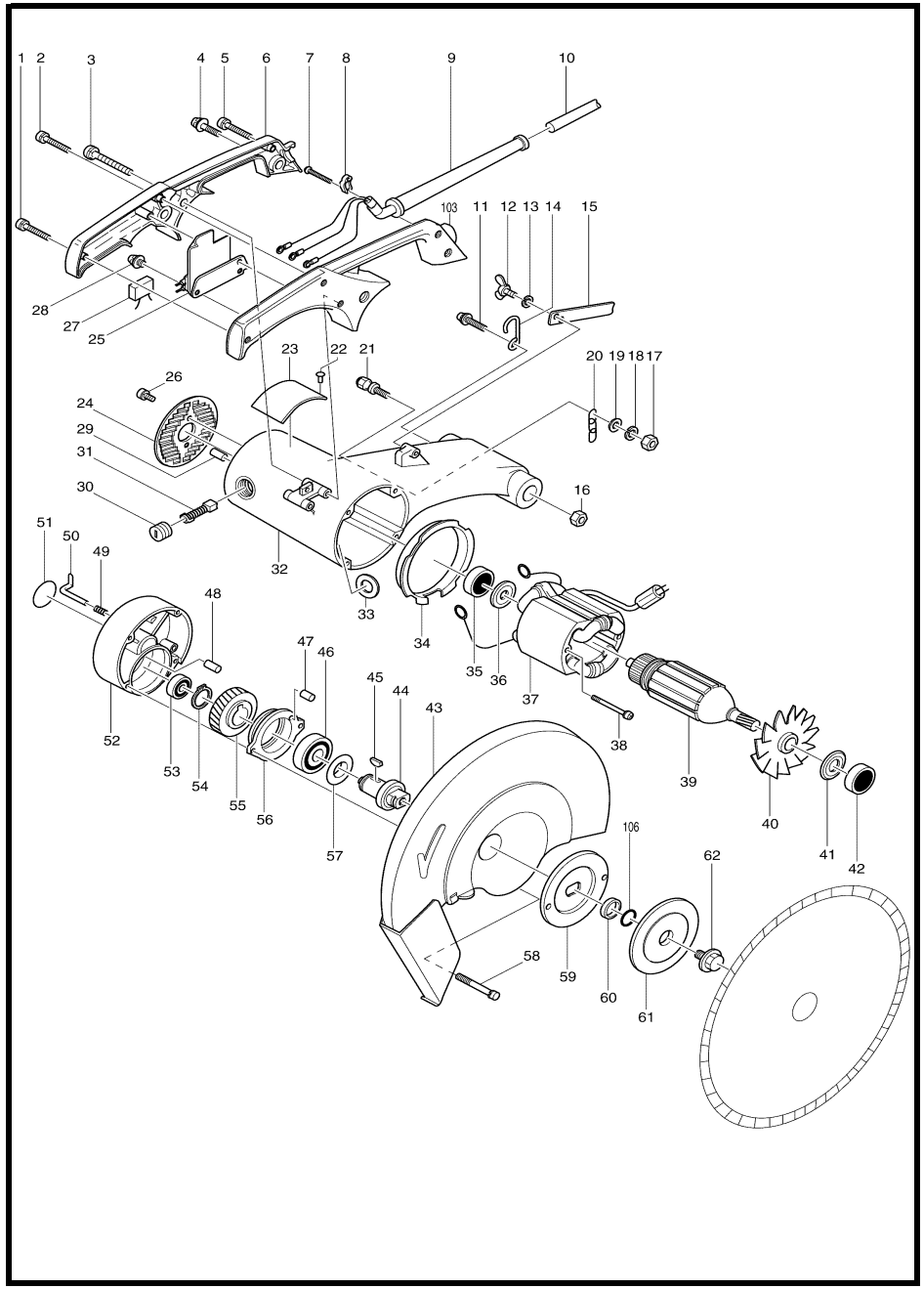

MODEL 2414

ITEM	PARTS ID	DESCRIPTION	PRICE/BAHT
001	911148-2	PAN HEAD SCREW M4X25	70
002	911148-2	PAN HEAD SCREW M4X25	70
003	911273-9	PAN HEAD SCREW M5X50	60
004	911253-5	PAN HEAD SCREW M5X30	50
005	911148-2	PAN HEAD SCREW M4X25	70
006	182751-8	HANDLE SET	960
007	265995-6	TAPPING SCREW 4X18	40
008	687054-0	STRAIN RELIEF	50
009	682507-4	CORD GUARD 12-200	160
010	691337-2	POWER SUPPLY CORD 1.25-3-2.5	1,240
011	911334-5	PAN HEAD SCREW M6X20	50
012	322049-3	HOOK	110
013	924206-5	WING BOLT M5X10	110
014	942101-7	SPRING WASHER 5	100
015	341395-5	STOPPER PLATE	110
016	931302-2	HEX. NUT M6	70
017	931302-2	HEX. NUT M6	70
018	942151-2	SPRING WASHER 6	100
019	253011-6	FLAT WASHER 6	40
020	282013-5	CHAIN	430
021	265380-3	HEX. BOLT M6X18	180
022	953106-2	RIVET 0-5	20
023	859380-9	NAME PLATE 2414	120
024	284010-7	REAR COVER	210
025	651018-0	SWITCH HPAHR2-3S	970
026	911211-1	PAN HEAD SCREW M5X12	30
028	911103-4	PAN HEAD SCREW M4X6	30
029	263002-9	RUBBER PIN 4	30
030	643650-4	BRUSH HOLDER CAP 6.5-13.5	70
031	B-80329	CARBON BRUSH SET CB-153A	
032	156409-5	MOTOR HOUSING	8,800
033	681002-1	INSULATION WASHER	30
034	343299-7	BAFFLE PLATE	180
035	211066-7	BALL BEARING 6200LLB	410
036	213051-6	DUST SEAL 10	120
037	524493-2	FIELD ASS'Y 220V	
038	911938-3	PAN HEAD SCREW M5X85	120
039	514543-1	ARMATURE ASS'Y 220V	
040	241515-0	FAN 92	210
041	213202-1	DUST SEAL 15	120
042	211206-7	BALL BEARING 6202LLB	460
043	168128-1	SAFETY COVER	4,830
044	325517-5	SPINDLE	1,410
045	254032-1	WOODRUFF KEY 5	110
046	211306-3	BALL BEARING 6204LLB	570
047	263005-3	RUBBER PIN 6	30
048	263002-9	RUBBER PIN 4	30
049	231240-1	COMPRESSION SPRING 7	20
050	325518-3	STOPPER	160
051	213460-9	O RING 35	50
052	157331-9	GEAR HOUSING	2,160
053	211061-7	BALL BEARING 6000LLB	390
054	961060-6	RETAINING RING S-20	50
055	221628-3	HELICAL GEAR 54	930
056	157026-4	BEARING HOUSING	620
057	253755-8	FLAT WASHER 20	110
058	911276-3	PAN HEAD SCREW M5X55	90
059	224141-0	INNER FLANGE 120	1,100
060	257054-0	RING 20	200
061	224142-8	OUTER FLANGE 120	1,050
062	251680-7	HEX. BOLT M10X25	230

SERVICE DRAWING

MODEL NO. 2414

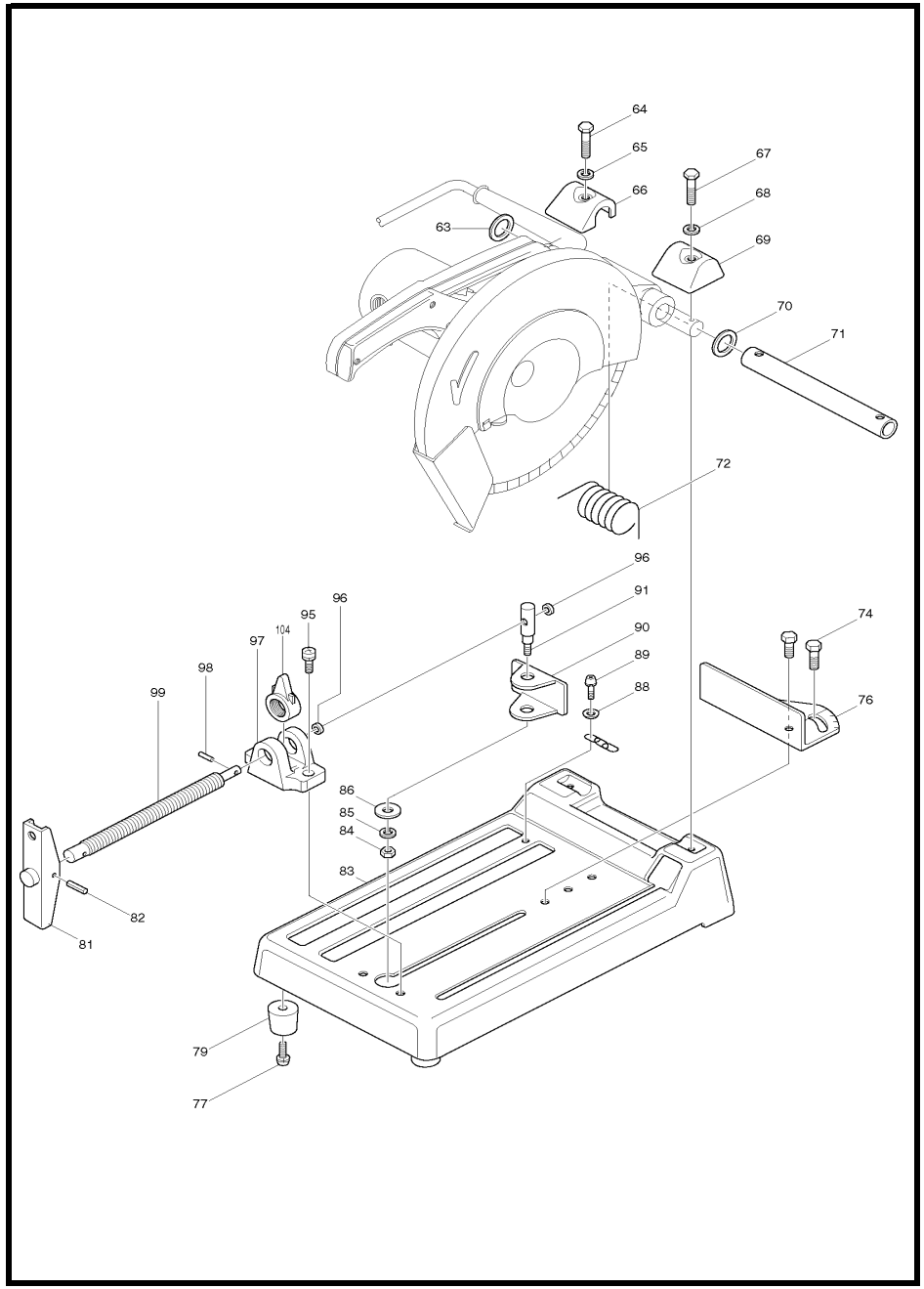

MODEL 2414

ITEM	PARTS ID	DESCRIPTION	PRICE/BAHT
063	253751-6	FLAT WASHER 24	80
064	251683-1	HEX. BOLT M8X40	100
065	942201-3	SPRING WASHER 8	110
066	345141-8	PIPE COVER (L)	360
067	251683-1	HEX. BOLT M8X40	100
068	942201-3	SPRING WASHER 8	110
069	345142-6	PIPE COVER (R)	360
070	253751-6	FLAT WASHER 24	80
071	331087-4	PIPE 24	850
072	231526-3	TORSION SPRING 26	500
074	265201-9	HEX. BOLT M10X25	120
076	345145-0	GUIDE PLATE	990
077	911349-2	PAN HEAD SCREW M6X28	90
079	421277-8	CUSHION	170
081	272021-4	HANDLE 120	190
082	951163-4	SPRING PIN 5-20	50
083	132385-7	BASE ASS'Y	6,780
084	931402-8	HEX. NUT M8	70
085	942201-3	SPRING WASHER 8	110
086	253752-4	FLAT WASHER 8	80
087	232047-8	LEAF SPRING	120
088	253011-6	FLAT WASHER 6	40
089	911316-7	PAN HEAD SCREW M6X14	50
090	343546-6	VICE PLATE	360
091	265922-3	SCREW M8	380
092	342497-0	SCREW COVER	270
093	253731-2	FLAT WASHER 8	70
094	342496-2	CONNECTOR	210
095	911451-1	PAN HEAD SCREW M8X30	70
096	253731-2	FLAT WASHER 8	70
097	311949-2	SCREW GUIDE	680
098	951066-2	SPRING PIN 3-18	30
099	322239-8	VICE SCREW	770
100	961012-7	STOP RING E-6	20
101	271607-1	KNOB 20	80
102	256614-5	PIN 8	130
103	182751-8	HANDLE SET	960
104	322209-7	VICE NUT	540
105	819064-1	MAKITA MARK	70
106	213218-6	O RING 16	20
400	782210-8	SOCKET WRENCH 17	220

SERVICE DRAWING

MODEL NO. 2414NB

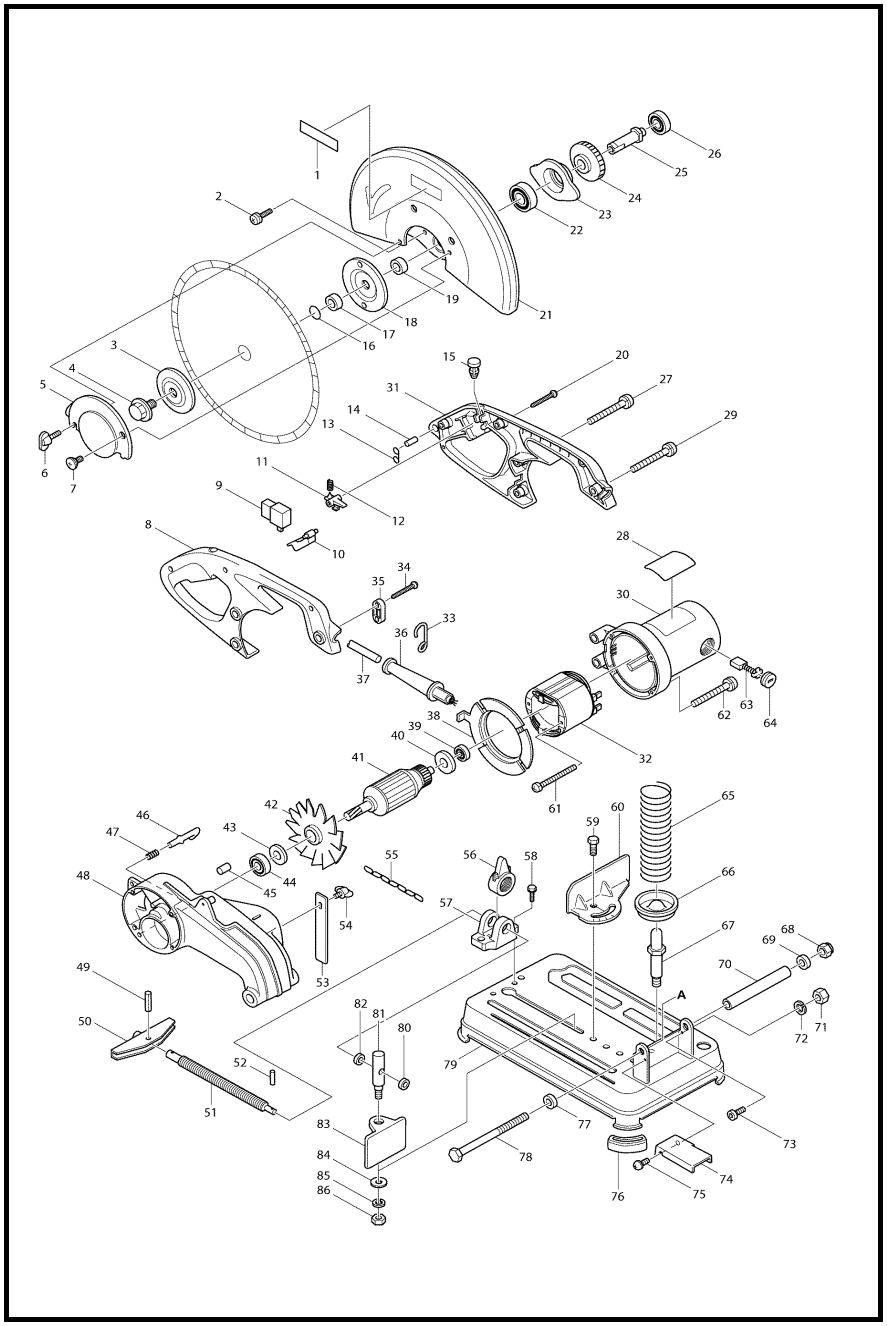

MODEL 2414NB

ITEM	PARTS ID	DESCRIPTION	PRICE/BAHT
002	911333-7	PAN HEAD SCREW M6X20	50
003	224299-5	FLANGE 90	620
004	251680-7	HEX. BOLT M10X25	230
005	344662-7	CENTER CAP	380
006	251887-5	SCREW M6X10	120
007	265121-7	+ FLAT HEAD SCREW M6	90
008	182628-7	HANDLE SET	1,290
009	651922-3	SWITCH TG71B	850
010	152448-3	SWITCH LEVER COMPLETE	210
011	415366-9	SWITCH LOCK	100
012	231397-8	COMPRESSION SPRING 4	50
013	281216-8	HANGER	70
014	256012-3	PIN 6	100
015	417113-4	SWITCH BUTTON	90
016	213162-7	O RING 14	30
017	257185-5	RING 17	160
018	224299-5	FLANGE 90	620
019	257185-5	RING 17	160
020	265995-6	TAPPING SCREW 4X18	40
021	165233-5	SAFETY COVER	2,260
022	211256-2	BALL BEARING 6203LLB	520
023	316527-3	BEARING BOX	660
024	226415-5	HELICAL GEAR 41	560
025	322633-4	SPINDLE	670
026	211064-1	BALL BEARING 6000	360
027	911273-9	PAN HEAD SCREW M5X50	60
028	859572-0	NAME PLATE 2414NB	390
029	911258-5	PAN HEAD SCREW M5X35	30
030	159750-5	MOTOR HOUSING COMPLETE	2,390
031	182628-7	HANDLE SET	1,290
032	636008-4	FIELD 220V	
033	322049-3	HOOK	110
034	265995-6	TAPPING SCREW 4X18	40
035	687054-0	STRAIN RELIEF	50
036	682505-8	CORD GUARD 10-90	150
037	691216-4	POWER SUPPLY CORD 1.25-2-2.5	950
038	415369-3	BAFFLE PLATE	170
039	210042-8	BALL BEARING 629LLB	250
040	681633-6	INSULATION WASHER	150
041	516563-1	ARMATURE ASS'Y 220V	
041	510240-7	ARMATURE ASS'Y 220V	
042	241515-0	FAN 92	210
043	267714-6	WASHER 15	120
044	211228-7	BALL BEARING 6202DDW	430
045	263005-3	RUBBER PIN 6	30
046	322665-1	STOPPER	150
047	231240-1	COMPRESSION SPRING 7	20
048	150916-0	GEAR HOUSING COMPLETE	3,700
049	951163-4	SPRING PIN 5-20	50
050	272021-4	HANDLE 120	190
051	322239-8	VICE SCREW	770
052	951066-2	SPRING PIN 3-18	30
053	344089-1	STOPPER PLATE	180
054	251887-5	SCREW M6X10	120
055	282016-9	CHAIN	130
056	322209-7	VICE NUT	540
057	311949-2	SCREW GUIDE	680
058	911451-1	PAN HEAD SCREW M8X30	70
059	265201-9	HEX. BOLT M10X25	120
060	344087-5	GUIDE PLATE	680
061	266059-9	TAPPING SCREW 5X75	150
062	911273-9	PAN HEAD SCREW M5X50	60
063	B-80341	CARBON BRUSH SET CB-203A	
064	643700-5	BRUSH HOLDER CAP 7-18	110
065	233085-3	COMPRESSION SPRING 45	630
066	165066-8	SPRING HOLDER	340
067	265407-9	HEX.BOLT M10	340
068	252130-5	HEX. LOCK NUT M10-17	140
069	267713-8	CUP WASHER 10	100
070	331428-4	PIN 16-113	290
071	931302-2	HEX. NUT M6	70
072	942151-2	SPRING WASHER 6	100
073	922312-0	HEX. SOCKET HEAD BOLT M6X12	110
074	344712-8	SPARK GUARD	170
075	911308-6	PAN HEAD SCREW M6X10	50
076	421487-7	CUSHION	130
077	267713-8	CUP WASHER 10	100
078	265406-1	HEX. BOLT M10X130	280
079	165230-1	BASE	4,430
080	253731-2	FLAT WASHER 8	70
081	321680-2	SCREW M8	300
082	253731-2	FLAT WASHER 8	70
083	342679-4	VISE PLATE	310
084	253752-4	FLAT WASHER 8	80
085	942201-3	SPRING WASHER 8	110
086	931402-8	HEX. NUT M8	70
087	253903-9	WAVE WASHER 6	90
A01	782210-8	SOCKET WRENCH 17	220

SERVICE DRAWING

MODEL NO. 2416S

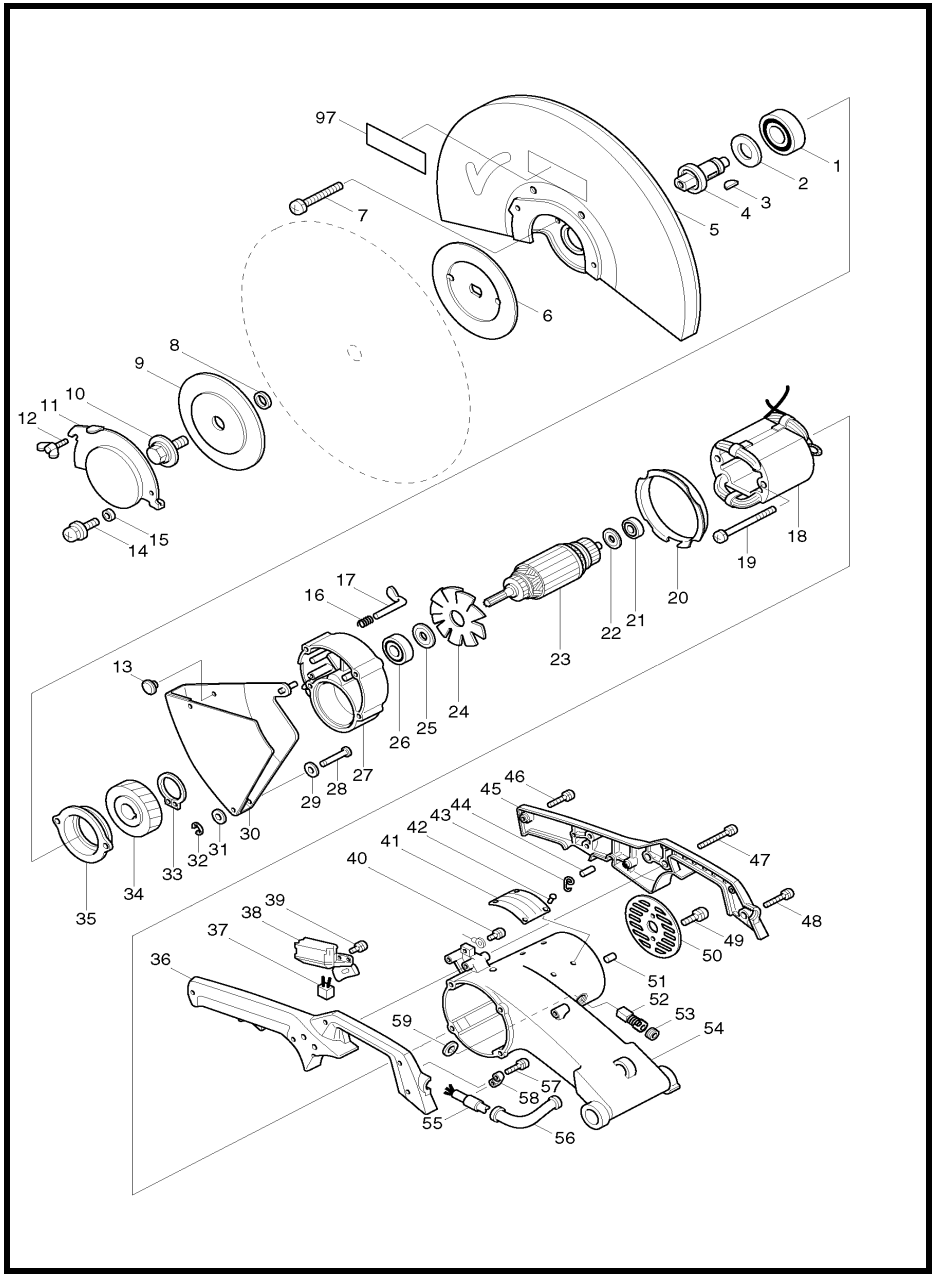

MODEL 2416S

ITEM	PARTS ID	DESCRIPTION	PRICE/BAHT
001	211361-5	BALL BEARING 6305LLB	920
002	253888-9	FLAT WASHER 25	120
003	254032-1	WOODRUFF KEY 5	110
004	321645-4	SPINDLE	2,060
005	164700-7	SAFETY COVER	3,850
006	224209-2	INNER FLANGE 140	1,300
007	911381-6	PAN HEAD SCREW M6X60	80
008	257104-1	RING 22	160
009	224208-4	OUTER FLANGE 140	1,260
010	251680-7	HEX. BOLT M10X25	230
011	342666-3	CENTER CAP	570
012	924306-1	WING BOLT M6X10	100
013	416771-3	PLUG	110
014	911309-4	PAN HEAD SCREW M6X10	80
015	257105-9	RING 6	110
016	231240-1	COMPRESSION SPRING 7	20
017	321682-8	STOPPER	160
018	524753-2	FIELD ASS'Y 220V	
019	911938-3	PAN HEAD SCREW M5X85	120
020	343299-7	BAFFLE PLATE	180
021	211066-7	BALL BEARING 6200LLB	410
022	213051-6	DUST SEAL 10	120
023	514883-7	ARMATURE ASS'Y 220V	
024	241515-0	FAN 92	210
025	253887-1	FLAT WASHER 15	100
026	211211-4	BALL BEARING 6302LLB	600
027	151829-8	GEAR HOUSING COMPLETE	2,760
028	256643-8	PIN 7	170
029	253022-1	FLAT WASHER 8	50
030	164699-6	SAFETY GUARD	
030	165276-7	SAFETY GUARD	1,720
031	253022-1	FLAT WASHER 8	50
032	961018-5	STOP RING E-5	50
033	961105-0	RETAINING RING S-25	80
034	221730-2	HELICAL GEAR 53	2,020
035	315636-5	BEARING HOUSING	690
036	181976-1	HANDLE SET	1,260
038	651128-3	SWITCH C3D-15AS	1,440
039	911113-1	PAN HEAD SCREW M4X10	30
040	652014-1	PAN HEAD SCREW M4X8	30
041	851469-9	NAME PLATE 2416S	170
042	953106-2	RIVET 0-5	20
043	281216-8	HANGER	70
044	256012-3	PIN 6	100
045	181976-1	HANDLE SET	1,260
046	911148-2	PAN HEAD SCREW M4X25	70
047	911273-9	PAN HEAD SCREW M5X50	60
048	911253-5	PAN HEAD SCREW M5X30	50
049	911211-1	PAN HEAD SCREW M5X12	30
050	284010-7	REAR COVER	210
051	263002-9	RUBBER PIN 4	30
052	B-80329	CARBON BRUSH SET CB-153A	
053	643650-4	BRUSH HOLDER CAP 6.5-13.5	70
054	157753-3	MOTOR HOUSING COMPLETE	7,440
055	691337-2	POWER SUPPLY CORD 1.25-3-2.5	1,240
056	682507-4	CORD GUARD 12-200	160
057	911133-5	PAN HEAD SCREW M4X18	50
058	687034-6	STRAIN RELIEF	80
059	681002-1	INSULATION WASHER	30
060	951163-4	SPRING PIN 5-20	50
061	272019-1	HANDLE 120	340
062	911451-1	PAN HEAD SCREW M8X30	70
063	331252-5	GUIDE	1,140
066	265201-9	HEX. BOLT M10X25	120
068	265201-9	HEX. BOLT M10X25	120
069	343422-4	STOPPER PLATE	170
070	942151-2	SPRING WASHER 6	100
071	924316-8	WING BOLT M6X15	110
072	342759-6	RETAINER	190
073	961104-2	RETAINING RING S-24	80
074	331251-7	PIPE 24	640
075	931302-2	HEX. NUT M6	70
076	942151-2	SPRING WASHER 6	100
077	922317-0	HEX. SOCKET HEAD BOLT M6X14	40
078	231569-5	TORSION SPRING 30	780
079	421277-8	CUSHION	170
080	911349-2	PAN HEAD SCREW M6X28	90
082	961104-2	RETAINING RING S-24	80
083	911316-7	PAN HEAD SCREW M6X14	50
084	342678-6	SPARK CHUTE	310
085	342679-4	VISE PLATE	310
086	931402-8	HEX. NUT M8	70
087	942201-3	SPRING WASHER 8	110
088	253752-4	FLAT WASHER 8	80
089	951066-2	SPRING PIN 3-18	30
090	321680-2	SCREW M8	300
091	253731-2	FLAT WASHER 8	70
092	253731-2	FLAT WASHER 8	70
093	164710-4	BASE	6,250
094	311714-9	VISE NUT	780
095	282016-9	CHAIN	130
096	321681-0	VISE SCREW	760
097	819064-1	MAKITA MARK	70
401	782210-8	SOCKET WRENCH 17	220

SERVICE DRAWING

MODEL NO. 2416S

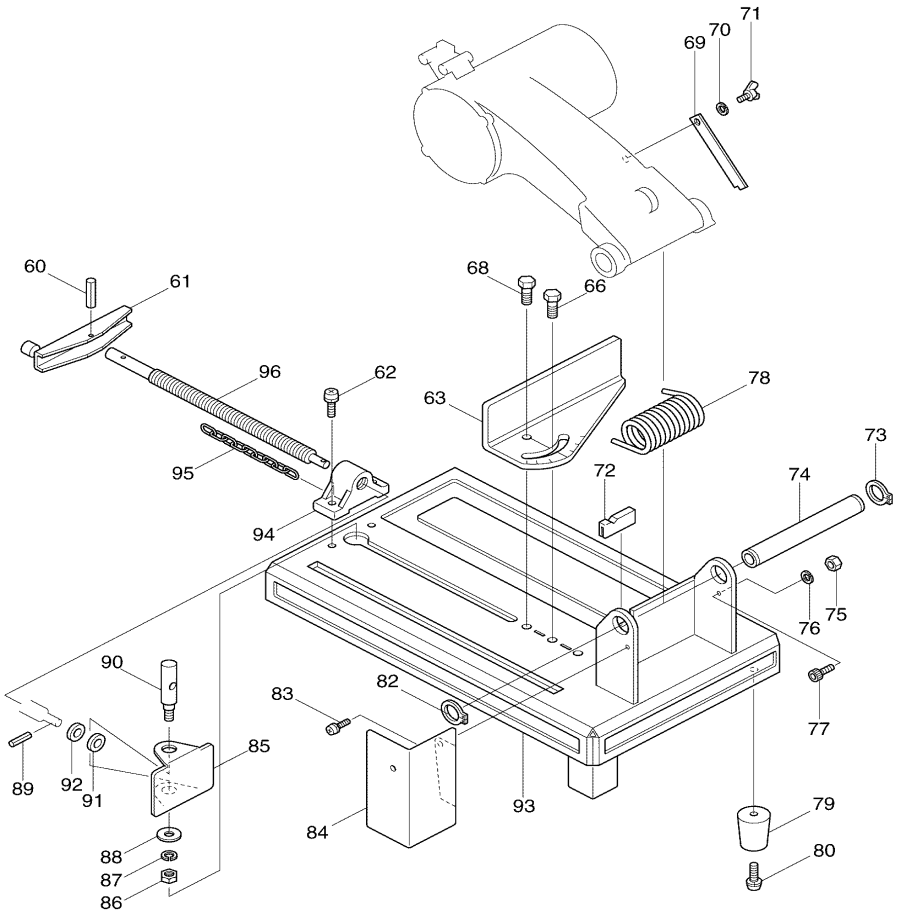

MODEL 2416S

ITEM	PARTS ID	DESCRIPTION	PRICE/BAHT
060	951163-4	SPRING PIN 5-20	50
061	272019-1	HANDLE 120	340
062	911451-1	PAN HEAD SCREW M8X30	70
063	331252-5	GUIDE	1,140
066	265201-9	HEX. BOLT M10X25	120
068	265201-9	HEX. BOLT M10X25	120
069	343422-4	STOPPER PLATE	170
070	942151-2	SPRING WASHER 6	100
071	924316-8	WING BOLT M6X15	110
072	342759-6	RETAINER	190
073	961104-2	RETAINING RING S-24	80
074	331251-7	PIPE 24	640
075	931302-2	HEX. NUT M6	70
076	942151-2	SPRING WASHER 6	100
077	922317-0	HEX. SOCKET HEAD BOLT M6X14	40
078	231569-5	TORSION SPRING 30	780
079	421277-8	CUSHION	170
080	911349-2	PAN HEAD SCREW M6X28	90
082	961104-2	RETAINING RING S-24	80
083	911316-7	PAN HEAD SCREW M6X14	50
084	342678-6	SPARK CHUTE	310
085	342679-4	VISE PLATE	310
086	931402-8	HEX. NUT M8	70
087	942201-3	SPRING WASHER 8	110
088	253752-4	FLAT WASHER 8	80
089	951066-2	SPRING PIN 3-18	30
090	321680-2	SCREW M8	300
091	253731-2	FLAT WASHER 8	70
092	253731-2	FLAT WASHER 8	70
093	164710-4	BASE	6,250
094	311714-9	VISE NUT	780
095	282016-9	CHAIN	130
096	321681-0	VISE SCREW	760
097	819064-1	MAKITA MARK	70
401	782210-8	SOCKET WRENCH 17	220

SERVICE DRAWING

MODEL NO. 3501N

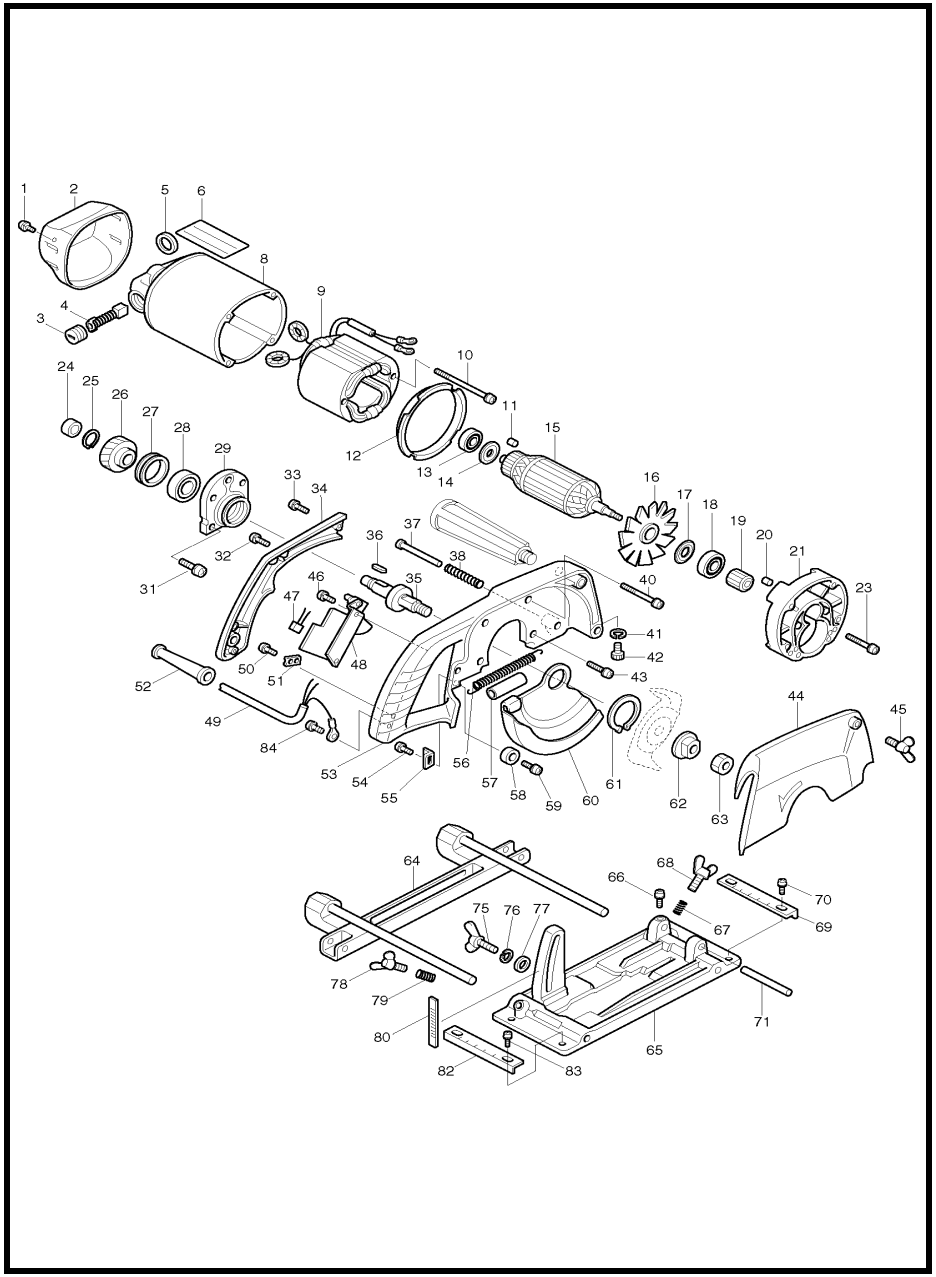

MODEL 3501N

ITEM	PARTS ID	DESCRIPTION	PRICE/BAHT
001	911211-1	PAN HEAD SCREW M5X12	30
002	284034-3	REAR COVER	520
003	643650-4	BRUSH HOLDER CAP 6.5-13.5	70
004	B-80329	CARBON BRUSH SET CB-153A	
005	681002-1	INSULATION WASHER	30
006	858576-9	NAME PLATE 3501N	120
008	156150-0	MOTOR HOUSING	3,870
009	524055-6	FIELD ASS'Y 220V	
010	911938-3	PAN HEAD SCREW M5X85	120
011	263002-9	RUBBER PIN 4	30
012	343006-8	BAFFLE PLATE	230
013	211066-7	BALL BEARING 6200LLB	410
014	213051-6	DUST SEAL 10	120
015	514485-9	ARMATURE ASS'Y 220V	
016	241513-4	FAN 92	210
017	213202-1	DUST SEAL 15	120
018	211206-7	BALL BEARING 6202LLB	460
019	221608-9	HELICAL GEAR 16	1,090
020	263005-3	RUBBER PIN 6	30
021	157027-2	GEAR HOUSING	1,740
023	265013-0	+ PAN HEAD SCREW M5X45	120
024	212101-4	NEEDLE BEARING 1210	360
025	961057-5	RETAINING RING S-17	40
026	221609-7	HELICAL GEAR 43	1,580
027	285810-8	BEARING RETAINER 29-42	160
028	211256-2	BALL BEARING 6203LLB	520
029	312924-1	BEARING BOX	810
031	911236-5	PAN HEAD SCREW M5X22	30
032	911151-3	PAN HEAD SCREW M4X28	30
033	911111-5	PAN HEAD SCREW M4X10	30
034	317392-3	HANDLE COVER	830
035	325418-7	SPINDLE	2,160
036	254206-4	KEY 4	100
037	325513-3	STOPPER	250
038	231238-8	COMPRESSION SPRING 8	50
040	265012-2	+ PAN HEAD SCREW M5X55	610
041	942101-7	SPRING WASHER 5	100
042	922202-7	HEX. SOCKET HEAD BOLT M5X8	30
043	911236-5	PAN HEAD SCREW M5X22	30
044	312902-1	CUTTER COVER	1,270
044	319065-4	CUTTER COVER	1,230
045	924336-2	WING BOLT M6X25	100
046	911106-8	PAN HEAD SCREW M4X8	30
048	651016-4	SWITCH HPAHR2-2	950
049	691346-1	POWER SUPPLY CORD 1.25-3-5.0	1,770
050	911133-5	PAN HEAD SCREW M4X18	50
051	687054-0	STRAIN RELIEF	50
052	682506-6	CORD GUARD 12-90	100
053	317391-5	CUTTER CASE	3,560
053	319063-8	CUTTER CASE	2,600
054	911109-2	PAN HEAD SCREW M4X8	40
055	816005-8	ARROW PLATE	110
056	231735-4	TENSION SPRING 4	120

ITEM	PARTS ID	DESCRIPTION	PRICE/BAHT
057	412032-9	VINYL TUBE 6.3X7.9X60	50
058	262024-6	URETHANE RING 8	150
059	251267-5	+ PAN HEAD SCREW M6	90
060	164444-9	SAFETY COVER	930
061	961202-2	RETAINING RING S-45	130
062	224002-4	FLANGE 35	270
063	931602-0	HEX. NUT M12	80
064	164443-1	GUIDE RULE	1,310
065	154274-6	BASE COMPLETE	6,370
065	143399-1	BASE COMPLETE	7,080
066	911202-2	PAN HEAD SCREW M5X8	20
067	231005-1	COMPRESSION SPRING 7	30
068	924336-2	WING BOLT M6X25	100
069	812051-9	SCALE PLATE	310
070	911109-2	PAN HEAD SCREW M4X8	40
071	256064-4	PIN 10	180
075	251854-0	WING BOLT M8X25	250
076	942201-3	SPRING WASHER 8	110
077	253022-1	FLAT WASHER 8	50
078	924326-5	WING BOLT M6X20	100
079	231005-1	COMPRESSION SPRING 7	30
080	812006-4	SCALE PLATE	120
082	812008-0	SCALE PLATE	310
083	911109-2	PAN HEAD SCREW M4X8	40
084	652014-1	PAN HEAD SCREW M4X8	30
400	224106-2	INNER FLANGE 56	960
401	224051-1	FLANGE 35	170
402	224003-2	OUTER FLANGE 56	410
403	A-87507	T.C.T.SAW BLADE 190X24TX20	1,950
404	793042-8	CUTTER BLADE 120-21.0	3,780
405	161025-0	GUIDE RULE F/SAW	700
406	273404-1	GRIP 37	270
407	133473-3	SHIPLAPPING SCALE ASS'Y	610
408	911306-0	PAN HEAD SCREW M6X10	30
409	824002-0	PLASTIC CASE	270
410	783002-8	(+) SCREWDRIVER 2	180
411	781029-2	WRENCH 21	230
412	781206-6	WRENCH 19	310
413	794063-3	DRESSING STONE 100-1200	320
414	821082-7	WOODEN CARRYING CASE	7,320

SERVICE DRAWING

MODEL NO. 3600H

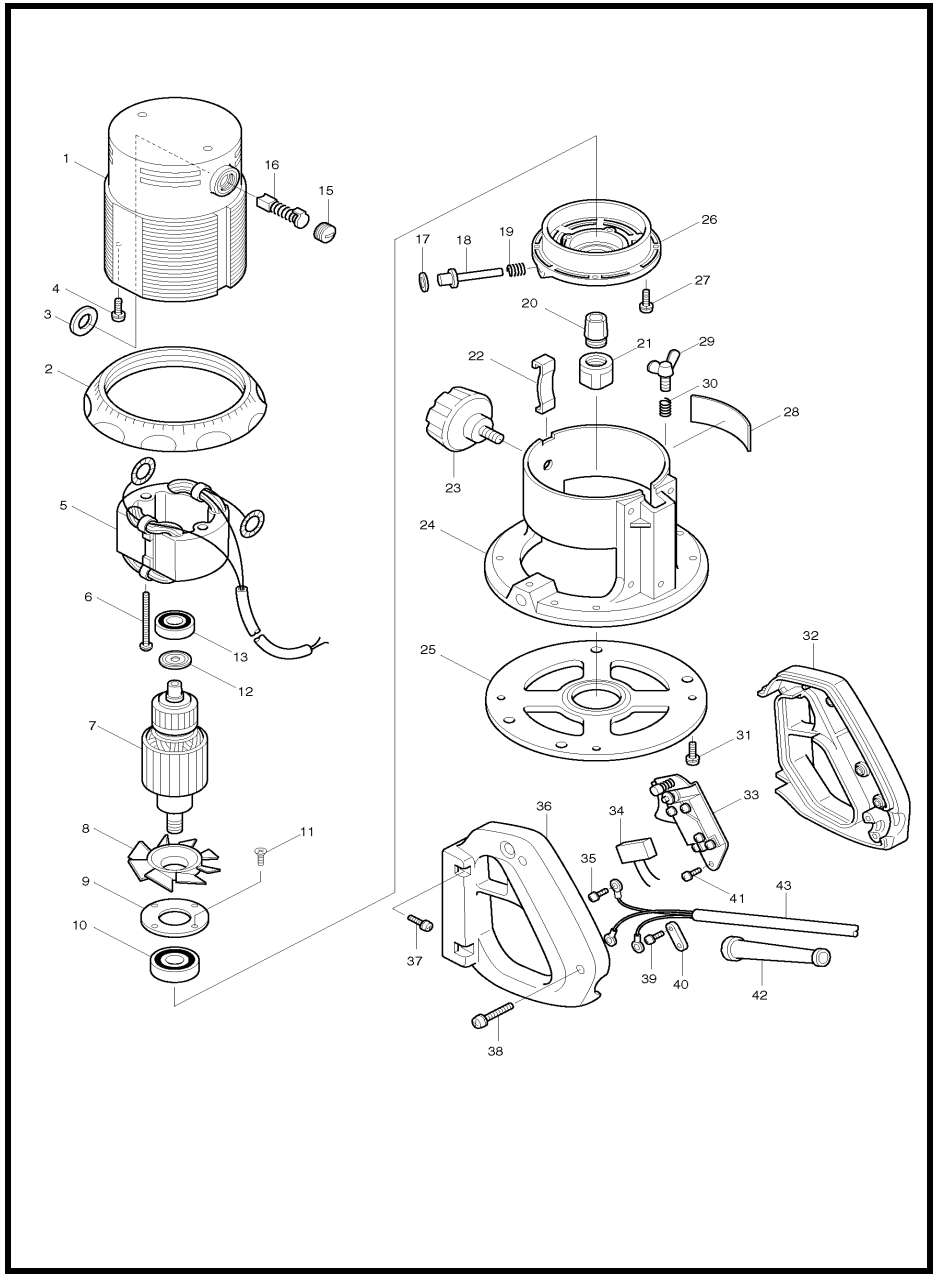

MODEL 3600H

ITEM	PARTS ID	DESCRIPTION	PRICE/BAHT
001	159247-4	MOTOR HOUSING	5,450
002	411372-2	SCALE RING	640
003	681002-1	INSULATION WASHER	30
004	652014-1	PAN HEAD SCREW M4X8	30
005	523348-8	FIELD ASS'Y 220V	
006	911300-2	PAN HEAD SCREW M5X75	100
007	514863-3	ARMATURE ASS'Y 220V	
008	241651-2	FAN 76	560
009	285657-0	BEARING RETAINER 50	150
010	211326-7	BALL BEARING 6004DDW	630
011	251295-0	+ COUNTERSUNK HEAD SCREW M4:	50
012	213051-6	DUST SEAL 10	120
013	211087-9	BALL BEARING 6200DDW	380
015	643650-4	BRUSH HOLDER CAP 6.5-13.5	70
016	B-80329	CARBON BRUSH SET CB-153A	
017	962062-5	RETAINING RING R-12	50
018	256606-4	PIN 6	150
019	231037-8	COMPRESSION SPRING 7	20
020	763622-4	COLLET CONE 1/2"	1,910
021	763629-0	COLLET NUT	890
022	342290-2	LOCK PLATE	120
023	271213-2	KNOB 52	490
024	316295-8	ROUTER BASE	3,440
025	411023-7	BASE PLATE	620
026	316294-0	MOTOR BRACKET	1,780
027	911221-8	PAN HEAD SCREW M5X16	30
028	855574-4	NAME PLATE 3600H	100
029	924326-5	WING BOLT M6X20	100
030	231005-1	COMPRESSION SPRING 7	30
031	911207-2	PAN HEAD SCREW M5X10	20
032	181148-8	HANDLE SET	960
033	651018-0	SWITCH HPAHR2-3S	970
035	652014-1	PAN HEAD SCREW M4X8	30
036	181148-8	HANDLE SET	960
037	911233-1	PAN HEAD SCREW M5X20	30
038	911153-9	PAN HEAD SCREW M4X28	30
039	911133-5	PAN HEAD SCREW M4X18	50
040	687034-6	STRAIN RELIEF	80
041	911103-4	PAN HEAD SCREW M4X6	30
042	682506-6	CORD GUARD 12-90	100
043	691346-1	POWER SUPPLY CORD 1.25-3-5.0	1,770
400	934201-7	WING NUT M5	90
401	942101-7	SPRING WASHER 5	100
402	163263-0	ROLL	450
403	342427-1	PLATE HOLDER	250
404	312038-6	TRIMMER GUIDE HOLDER	530
405	941151-9	FLAT WASHER 6	30
406	942151-2	SPRING WASHER 6	100
407	924346-9	WING BOLT M6X30	130
408	924316-8	WING BOLT M6X15	110
409	942151-2	SPRING WASHER 6	100
410	941151-9	FLAT WASHER 6	30
411	923211-9	CAP SQUARE NECK BOLT M5X12	50
412	251879-4	SCREW M10X65	340
413	924326-5	WING BOLT M6X20	100
414	312039-4	STRAIGHT GUIDE	1,150
415	231005-1	COMPRESSION SPRING 7	30
416	256902-0	ROD 10-180	390
417	323018-7	TEMPLET GUIDE 16	510
418	763803-0	COLLET SLEEVE FOR 1/4" BIT	450
419	763805-6	COLLET SLEEVE FOR 3/8" BIT	410
420	793088-4	STRAIGHT BIT 12E	2,080
421	781030-7	WRENCH 24	320
500	122343-1	TRIMMER GUIDE ASS'Y	990
501	123029-0	STRAIGHT GUIDE ASS'Y	1,320

SERVICE DRAWING

MODEL NO. 3601B

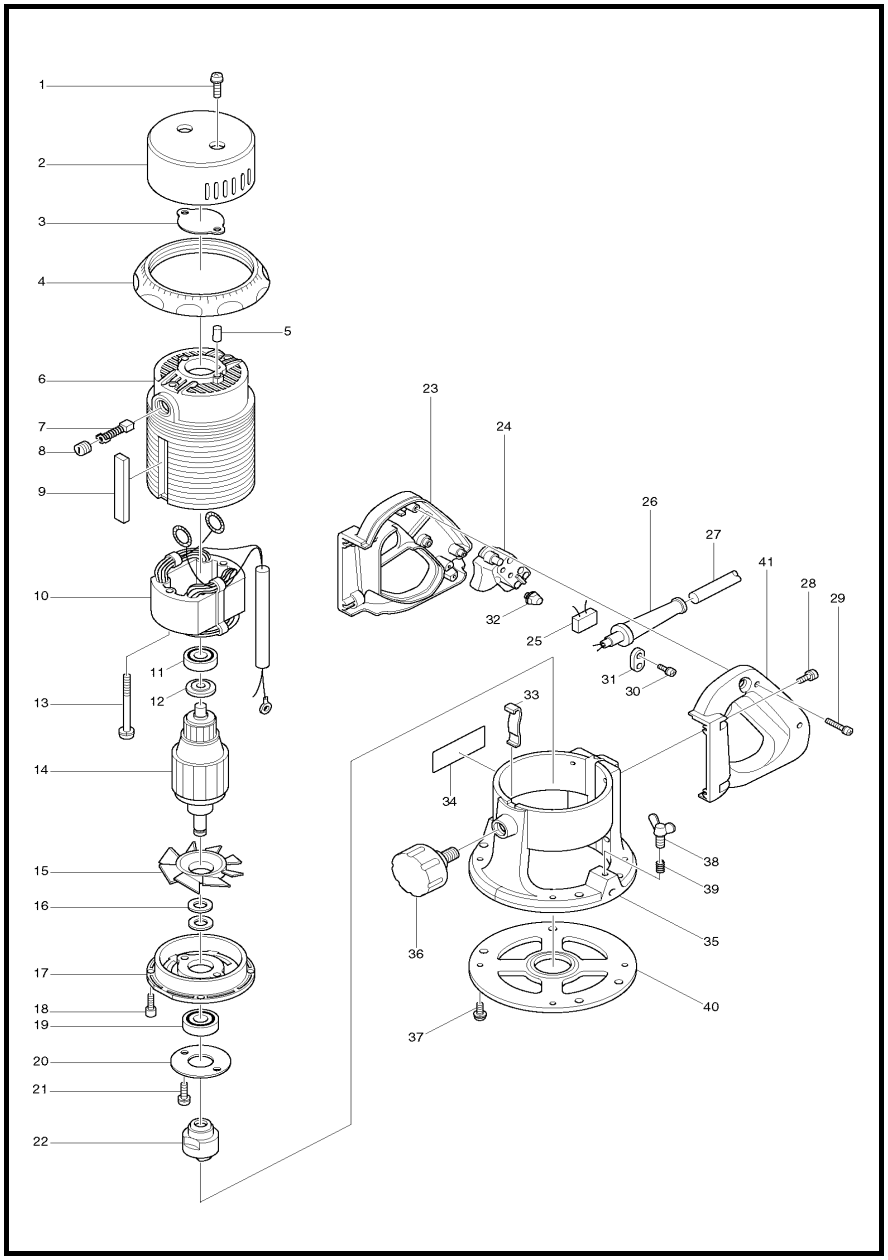

MODEL 3601B

ITEM	PARTS ID	DESCRIPTION	PRICE/BAHT
001	911216-1	PAN HEAD SCREW M5X14	30
002	284042-4	REAR COVER	670
003	285016-8	BEARING COVER 45	170
004	411372-2	SCALE RING	640
005	263002-9	RUBBER PIN 4	30
006	159246-6	MOTOR HOUSING COMPLETE	1,890
008	643650-4	BRUSH HOLDER CAP 6.5-13.5	70
009	341381-6	STAY	160
010	523035-9	FIELD ASS'Y 220V	
011	211068-3	BALL BEARING 6200LB	370
012	681635-2	INSULATION WASHER	80
013	911280-2	PAN HEAD SCREW M5X55	80
014	513304-6	ARMATURE ASS'Y 220V	
015	241621-1	FAN 76	470
016	253748-5	FLAT WASHER 12	80
017	316296-6	MOTOR BRACKET	1,260
018	911241-2	PAN HEAD SCREW M5X25	110
019	211129-9	BALL BEARING 6201DDW	300
020	285612-2	BEARING RETAINER 40	120
021	911216-1	PAN HEAD SCREW M5X14	30
022	763602-0	COLLET CHUCK 1/2"	2,400
023	181148-8	HANDLE SET	960
024	651018-0	SWITCH HPAHR2-3S	970
026	682505-8	CORD GUARD 10-90	150
027	691227-9	POWER SUPPLY CORD 1.25-2-5.0	1,290
028	911233-1	PAN HEAD SCREW M5X20	30
029	911153-9	PAN HEAD SCREW M4X28	30
030	911133-5	PAN HEAD SCREW M4X18	50
031	687000-3	STRAIN RELIEF	40
032	911103-4	PAN HEAD SCREW M4X6	30
033	342290-2	LOCK PLATE	120
034	815035-6	NAME PLATE 3601B	80
035	316297-4	ROUTER BASE	3,430
036	271213-2	KNOB 52	490
037	911207-2	PAN HEAD SCREW M5X10	20
038	924326-5	WING BOLT M6X20	100
039	231005-1	COMPRESSION SPRING 7	30
040	411023-7	BASE PLATE	620
041	181148-8	HANDLE SET	960
400	D-07901	STRAIGHT BIT 12E	860
401	763803-0	COLLET SLEEVE FOR 1/4" BIT	450
402	763805-6	COLLET SLEEVE FOR 3/8" BIT	410
403	781029-2	WRENCH 21	230
404	781012-9	WRENCH 23	270
405	924326-5	WING BOLT M6X20	100
406	231005-1	COMPRESSION SPRING 7	30
407	312039-4	STRAIGHT GUIDE	1,150
408	256902-0	ROD 10-180	390
409	323018-7	TEMPLET GUIDE 16	510
410	924316-8	WING BOLT M6X15	110
411	942151-2	SPRING WASHER 6	100
412	941151-9	FLAT WASHER 6	30
414	312038-6	TRIMMER GUIDE HOLDER	530
415	941151-9	FLAT WASHER 6	30
416	924346-9	WING BOLT M6X30	130
417	942151-2	SPRING WASHER 6	100
418	251879-4	SCREW M10X65	340
419	163263-0	ROLL	450
420	257008-7	RING 10	130
421	342427-1	PLATE HOLDER	250
422	923211-9	CAP SQUARE NECK BOLT M5X12	50
423	934201-7	WING NUT M5	90
424	942101-7	SPRING WASHER 5	100
500	123029-0	STRAIGHT GUIDE ASS'Y	1,320
501	122343-1	TRIMMER GUIDE ASS'Y	990

SERVICE DRAWING

MODEL NO. 3612

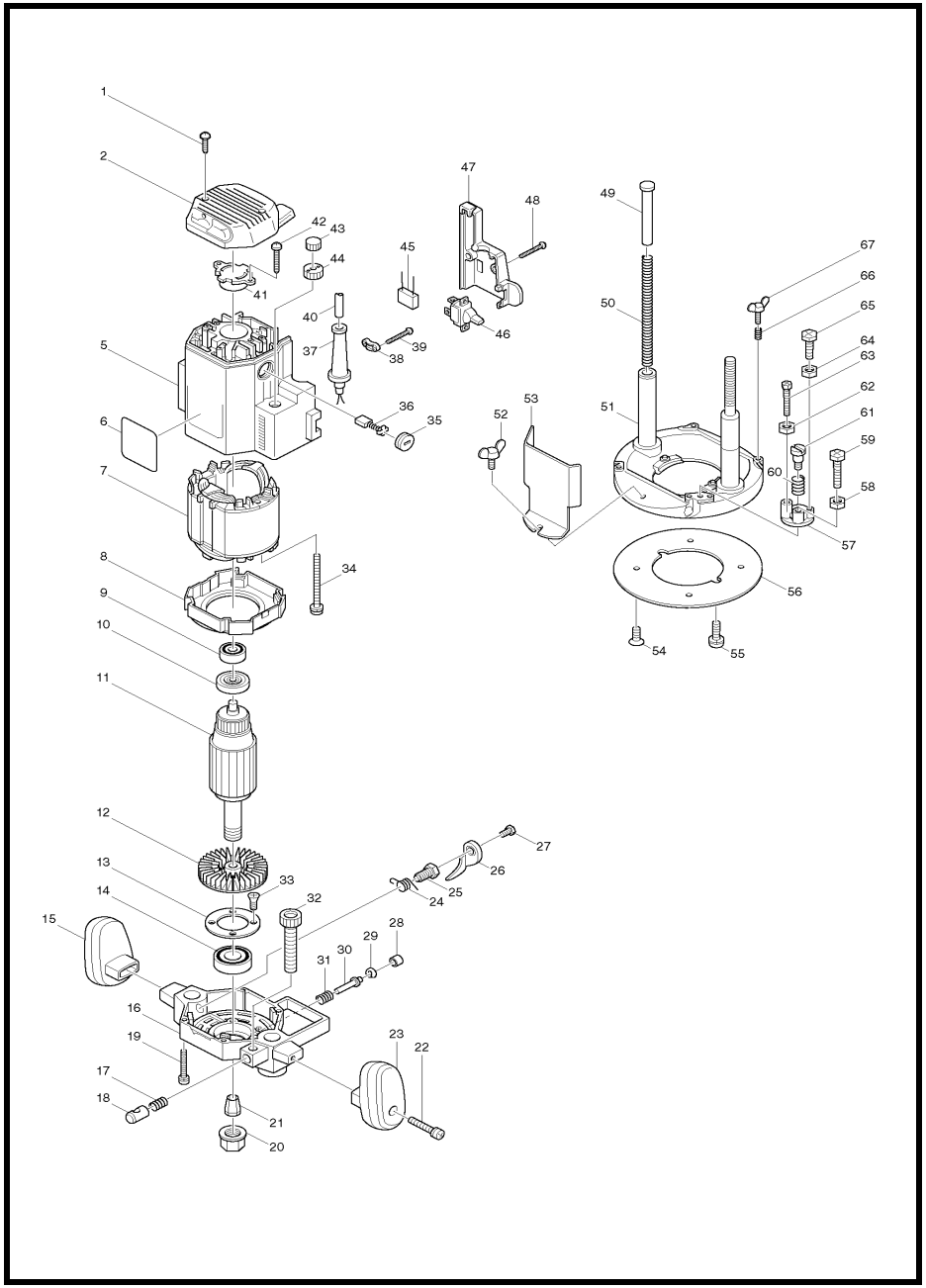

MODEL 3612

ITEM	PARTS ID	DESCRIPTION	PRICE/BAHT
001	266021-4	TAPPING SCREW 5X20	60
002	415450-0	REAR COVER	580
005	159986-6	MOTOR HOUSING COMPLETE	3,300
007	636163-2	FIELD 220V	
008	415069-5	BAFFLE PLATE	340
009	211092-6	BALL BEARING 629DDW	330
010	681633-6	INSULATION WASHER	150
011	516588-5	ARMATURE ASS'Y 220V	
012	241878-4	FAN 83	360
013	285657-0	BEARING RETAINER 50	150
014	211326-7	BALL BEARING 6004DDW	630
015	415070-0	KNOB (L)	570
016	152567-5	MOTOR BRACKET COMPLETE	3,870
017	231142-1	COMPRESSION SPRING 10	40
018	323559-3	HALF NUT	390
019	911263-2	PAN HEAD SCREW M5X40	60
020	763629-0	COLLET NUT	890
021	763622-4	COLLET CONE 1/2"	1,910
022	911368-8	PAN HEAD SCREW M6X45	80
023	415071-8	KNOB (R)	550
024	231618-8	TORSION SPRING 15	190
025	266015-9	SET BOLT M10	290
026	344097-2	LOCK LEVER	230
027	265269-5	HEX. BOLT M5X12	30
028	286235-9	CAP 11	80
029	962062-5	RETAINING RING R-12	50
030	256606-4	PIN 6	150
031	231037-8	COMPRESSION SPRING 7	20
032	251861-3	SCREW M10X77	190
033	251295-0	+ COUNTERSUNK HEAD SCREW M4.	50
034	911944-8	PAN HEAD SCREW M5X80	120
035	643700-5	BRUSH HOLDER CAP 7-18	110
036	B-80341	CARBON BRUSH SET CB-203A	
037	682505-8	CORD GUARD 10-90	150
038	687054-0	STRAIN RELIEF	50
039	265995-6	TAPPING SCREW 4X18	40
040	691216-4	POWER SUPPLY CORD 1.25-2-2.5	950
041	316499-2	BEARING BOX	510
042	265995-6	TAPPING SCREW 4X18	40
043	153764-6	KNOB 50 COMPLETE	150
044	410129-8	NYLON NUT M10	120
046	651431-2	SWITCH ELE120AY	660
047	415072-6	SWITCH COVER	470
048	265995-6	TAPPING SCREW 4X18	40
049	314062-5	POLE	180
050	231329-5	COMPRESSION SPRING 11	150
051	151158-9	BASE COMPLETE	4,650
052	924206-5	WING BOLT M5X10	110
053	410128-0	CHIP DEFLECTOR	230
054	912112-6	COUNTERSUNK HEAD SCREW M4X1	30
055	911206-4	PAN HEAD SCREW M5X10	20
056	413024-1	BASE PLATE	550
057	134205-1	STOPPER ASS'Y	1,090

ITEM	PARTS ID	DESCRIPTION	PRICE/BAHT
058	931202-6	HEX. NUT M5	70
059	265335-8	+ HEX. BOLT M5X28	90
060	231231-2	COMPRESSION SPRING 12	80
061	251423-7	- FLAT HEAD SCREW M6	170
062	931202-6	HEX. NUT M5	70
063	265336-6	+ HEX. BOLT M5X40	90
064	931202-6	HEX. NUT M5	70
065	265333-2	+ HEX. BOLT M5X16	40
066	231240-1	COMPRESSION SPRING 7	20
067	924216-2	WING BOLT M5X15	80
A01	342428-9	STRAIGHT GUIDE	540
A02	781213-9	WRENCH 8	190
A03	781030-7	WRENCH 24	320
A05	D-07901	STRAIGHT BIT 12E	860
A06	763805-6	COLLET SLEEVE FOR 3/8" BIT	410
A07	763803-0	COLLET SLEEVE FOR 1/4" BIT	450
A08	924311-8	WING BOLT M6X12	100
A09	942151-2	SPRING WASHER 6	100
A10	941151-9	FLAT WASHER 6	30
A11	122256-6	GUIDE HOLDER ASS'Y	1,640
A12	251830-4	SCREW M10X34	250
E22	192652-2	DUST COVER & SPACER SET	200
E26	123022-4	TRIMMER GUIDE ASS'Y	410

SERVICE DRAWING

MODEL NO. 3612BR

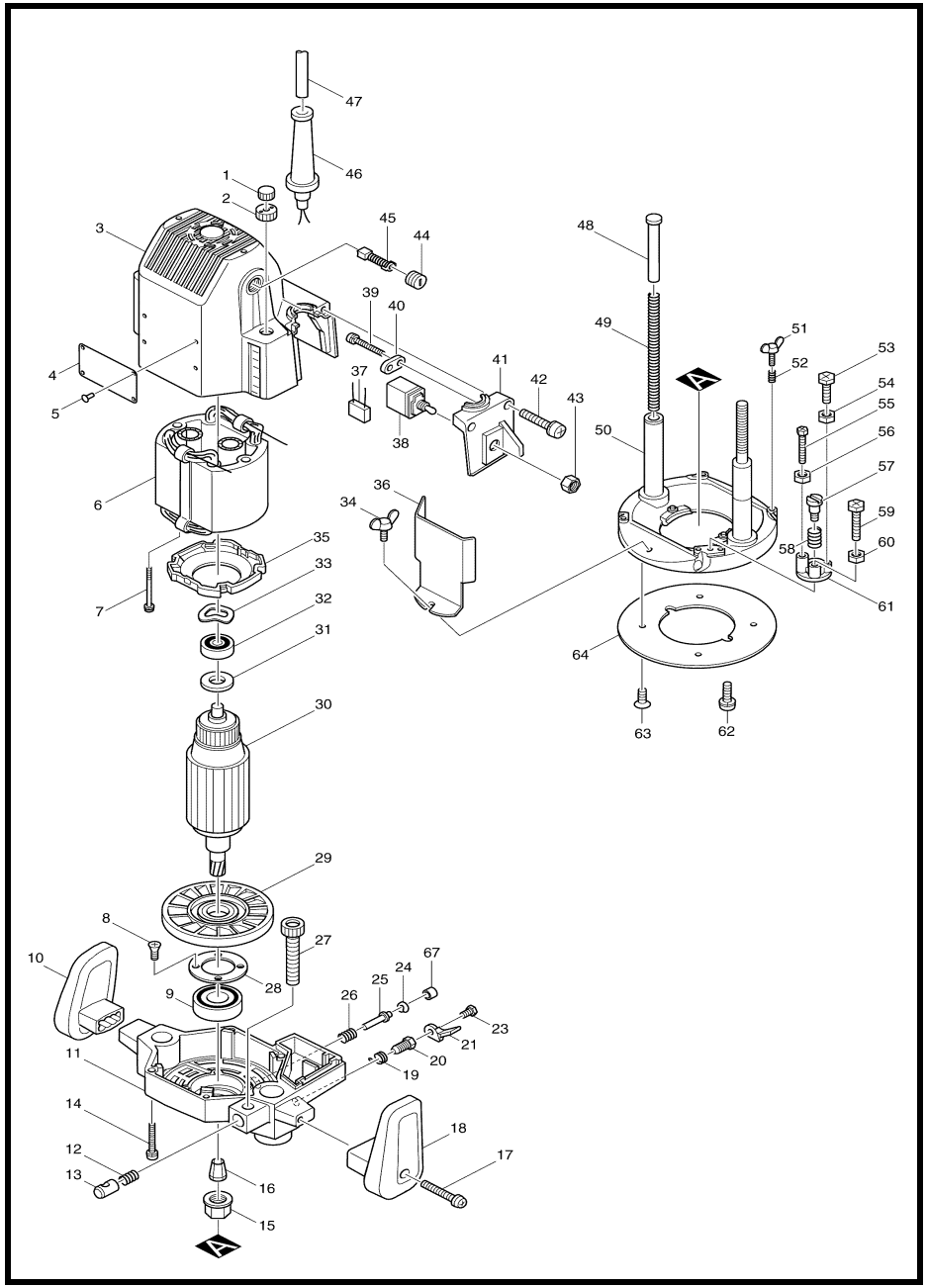

MODEL 3612BR

ITEM	PARTS ID	DESCRIPTION	PRICE/BAHT
001	252625-8	NUT M10	210
002	410129-8	NYLON NUT M10	120
003	157109-0	MOTOR HOUSING	2,980
005	953106-2	RIVET 0-5	20
006	524708-7	FIELD ASS'Y 220V	
007	911938-3	PAN HEAD SCREW M5X85	120
008	251295-0	+ COUNTERSUNK HEAD SCREW M4	50
009	211326-7	BALL BEARING 6004DDW	630
010	410127-2	KNOB L	400
011	155763-4	MOTOR BRACKET	3,630
012	231142-1	COMPRESSION SPRING 10	40
013	323559-3	HALF NUT	390
014	911263-2	PAN HEAD SCREW M5X40	60
015	763629-0	COLLET NUT	890
016	763622-4	COLLET CONE 1/2"	1,910
017	911363-8	PAN HEAD SCREW M6X40	80
018	410126-4	KNOB R	400
019	231574-2	TORSION SPRING 15	80
020	265813-8	SET BOLT M10	320
021	341933-3	LOCK LEVER	170
023	265269-5	HEX. BOLT M5X12	30
024	962062-5	RETAINING RING R-12	50
025	256606-4	PIN 6	150
026	231037-8	COMPRESSION SPRING 7	20
027	251861-3	SCREW M10X77	190
028	285657-0	BEARING RETAINER 50	150
030	514823-5	ARMATURE ASS'Y 220V	
031	681635-2	INSULATION WASHER	80
032	211087-9	BALL BEARING 6200DDW	380
033	253913-6	WAVE WASHER 20	50
034	924206-5	WING BOLT M5X10	110
035	410258-7	BAFFLE PLATE	170
036	410128-0	CHIP DEFLECTOR	230
038	651481-7	SWITCH STE215K	1,370
039	911133-5	PAN HEAD SCREW M4X18	50
040	687000-3	STRAIN RELIEF	40
041	410297-7	SWITCH COVER	230
042	911143-2	PAN HEAD SCREW M4X22	110
043	652102-4	HEX. NUT M12	80
044	643650-4	BRUSH HOLDER CAP 6.5-13.5	70
045	B-80329	CARBON BRUSH SET CB-153A	
046	682504-0	CORD GUARD 10-85	190
047	691216-4	POWER SUPPLY CORD 1.25-2-2.5	950
048	314062-5	POLE	180
049	231329-5	COMPRESSION SPRING 11	150
050	151158-9	BASE COMPLETE	4,650
051	924216-2	WING BOLT M5X15	80
052	231240-1	COMPRESSION SPRING 7	20
053	265333-2	+ HEX. BOLT M5X16	40
054	931202-6	HEX. NUT M5	70
055	265336-6	+ HEX. BOLT M5X40	90
056	931202-6	HEX. NUT M5	70
057	251423-7	- FLAT HEAD SCREW M6	170
058	231231-2	COMPRESSION SPRING 12	80
059	265335-8	+ HEX. BOLT M5X28	90
060	931202-6	HEX. NUT M5	70
061	134205-1	STOPPER ASS'Y	1,090
062	911206-4	PAN HEAD SCREW M5X10	20
063	912112-6	COUNTERSUNK HEAD SCREW M4X1	30
064	413024-1	BASE PLATE	550
067	286235-9	CAP 11	80
400	154233-0	HOLDER COMPLETE	1,870
401	251830-4	SCREW M10X34	250
402	342427-1	PLATE HOLDER	250
403	941101-4	FLAT WASHER 5	20
404	942101-7	SPRING WASHER 5	100
405	924206-5	WING BOLT M5X10	110
406	163053-1	ROLL	370
407	342428-9	STRAIGHT GUIDE	540
408	941151-9	FLAT WASHER 6	30
409	942151-2	SPRING WASHER 6	100
410	924311-8	WING BOLT M6X12	100
411	763803-0	COLLET SLEEVE FOR 1/4" BIT	450
412	763805-6	COLLET SLEEVE FOR 3/8" BIT	410
413	781213-9	WRENCH 8	190
414	781030-7	WRENCH 24	320
415	344364-5	TEMPLET GUIDE 16	190
416	D-07901	STRAIGHT BIT 12E	860
500	122256-6	GUIDE HOLDER ASS'Y	1,640
501	123022-4	TRIMMER GUIDE ASS'Y	410

SERVICE DRAWING

MODEL NO. 3612C

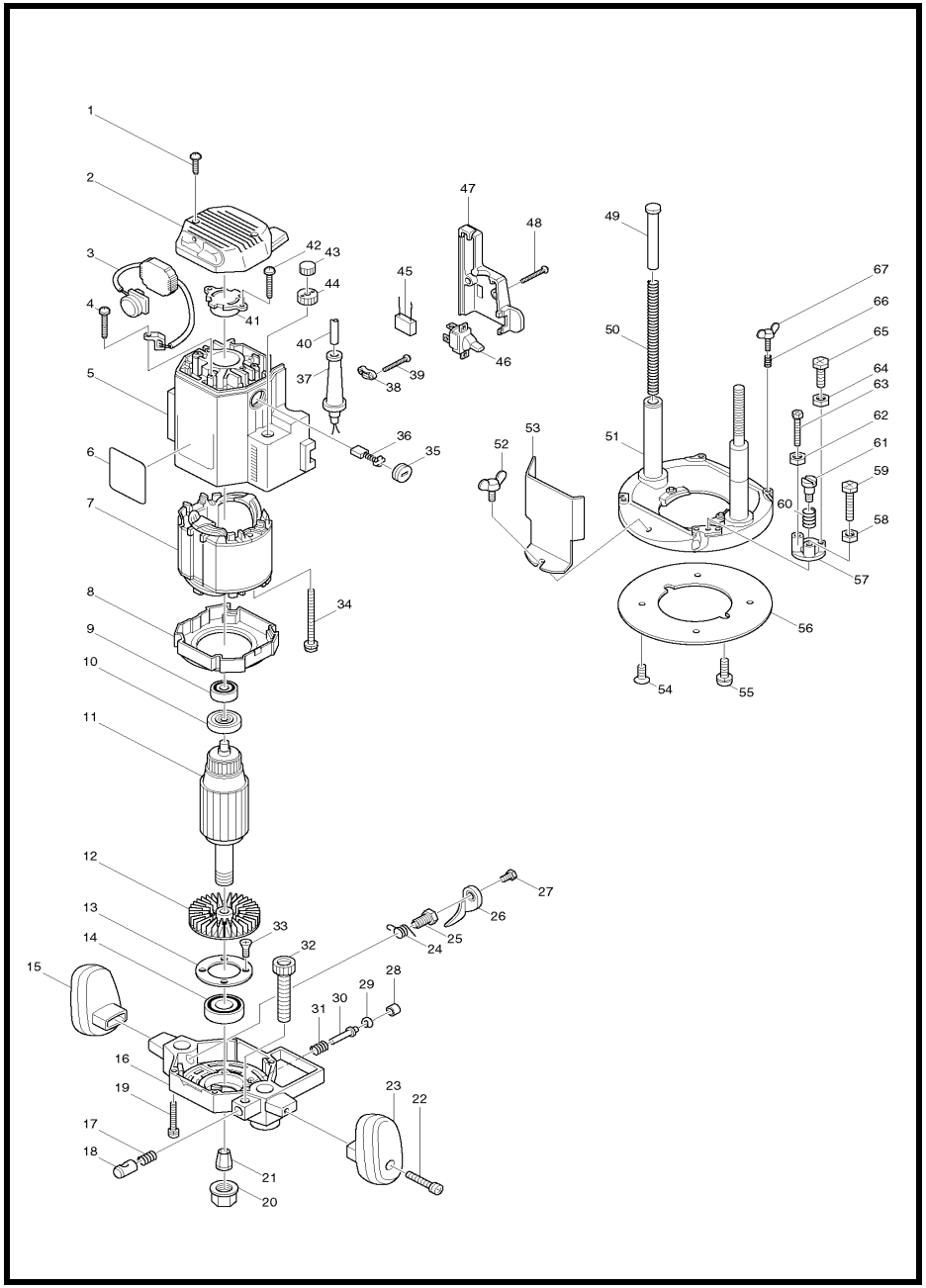

MODEL 3612C

ITEM	PARTS ID	DESCRIPTION	PRICE/BAHT
001	266021-4	TAPPING SCREW 5X20	60
002	415067-9	REAR COVER	510
003	631151-4	CONTROLLER 200/220/240V	8,960
004	265995-6	TAPPING SCREW 4X18	40
005	159668-0	MOTOR HOUSING COMPLETE	3,320
007	636013-1	FIELD 220V	
008	415069-5	BAFFLE PLATE	340
009	211092-6	BALL BEARING 629DDW	330
010	681631-0	INSULATION WASHER	710
013	285657-0	BEARING RETAINER 50	150
014	211326-7	BALL BEARING 6004DDW	630
015	415070-0	KNOB (L)	570
016	152567-5	MOTOR BRACKET COMPLETE	3,870
017	231142-1	COMPRESSION SPRING 10	40
018	323559-3	HALF NUT	390
019	911263-2	PAN HEAD SCREW M5X40	60
020	763629-0	COLLET NUT	890
021	763622-4	COLLET CONE 1/2"	1,910
022	911368-8	PAN HEAD SCREW M6X45	80
023	415071-8	KNOB (R)	550
024	231618-8	TORSION SPRING 15	190
025	266015-9	SET BOLT M10	290
026	344097-2	LOCK LEVER	230
027	265269-5	HEX. BOLT M5X12	30
028	286235-9	CAP 11	80
029	962062-5	RETAINING RING R-12	50
030	256606-4	PIN 6	150
031	231037-8	COMPRESSION SPRING 7	20
032	251861-3	SCREW M10X77	190
033	251295-0	+ COUNTERSUNK HEAD SCREW M4.	50
034	911944-8	PAN HEAD SCREW M5X80	120
035	643700-5	BRUSH HOLDER CAP 7-18	110
036	B-80341	CARBON BRUSH SET CB-203A	
037	682505-8	CORD GUARD 10-90	150
038	687054-0	STRAIN RELIEF	50
039	265995-6	TAPPING SCREW 4X18	40
040	691216-4	POWER SUPPLY CORD 1.25-2-2.5	950
041	316499-2	BEARING BOX	510
042	265995-6	TAPPING SCREW 4X18	40
043	153764-6	KNOB 50 COMPLETE	150
044	410129-8	NYLON NUT M10	120
046	651429-9	SWITCH ELE120DY	1,430
047	415072-6	SWITCH COVER	470
048	265995-6	TAPPING SCREW 4X18	40
049	314062-5	POLE	180
050	231329-5	COMPRESSION SPRING 11	150
051	151158-9	BASE COMPLETE	4,650
052	924206-5	WING BOLT M5X10	110
053	410128-0	CHIP DEFLECTOR	230
054	912112-6	COUNTERSUNK HEAD SCREW M4X1	30
055	911206-4	PAN HEAD SCREW M5X10	20
056	413024-1	BASE PLATE	550
057	134205-1	STOPPER ASS'Y	1,090
058	931202-6	HEX. NUT M5	70
059	265335-8	+ HEX. BOLT M5X28	90
060	231231-2	COMPRESSION SPRING 12	80
061	251423-7	- FLAT HEAD SCREW M6	170
062	931202-6	HEX. NUT M5	70
063	265336-6	+ HEX. BOLT M5X40	90
064	931202-6	HEX. NUT M5	70
065	265333-2	+ HEX. BOLT M5X16	40
066	231240-1	COMPRESSION SPRING 7	20
067	924216-2	WING BOLT M5X15	80
068	812467-8	INDICATION LABEL	80
A01	342428-9	STRAIGHT GUIDE	540
A02	781213-9	WRENCH 8	190
A03	781030-7	WRENCH 24	320
A05	D-07901	STRAIGHT BIT 12E	860
A06	763805-6	COLLET SLEEVE FOR 3/8" BIT	410
A07	763803-0	COLLET SLEEVE FOR 1/4" BIT	450
A08	924311-8	WING BOLT M6X12	100
A09	942151-2	SPRING WASHER 6	100
A10	941151-9	FLAT WASHER 6	30
A11	122256-6	GUIDE HOLDER ASS'Y	1,640
A12	251830-4	SCREW M10X34	250
E20	192652-2	DUST COVER & SPACER SET	200
E21	123022-4	TRIMMER GUIDE ASS'Y	410

SERVICE DRAWING

MODEL NO. 3700B

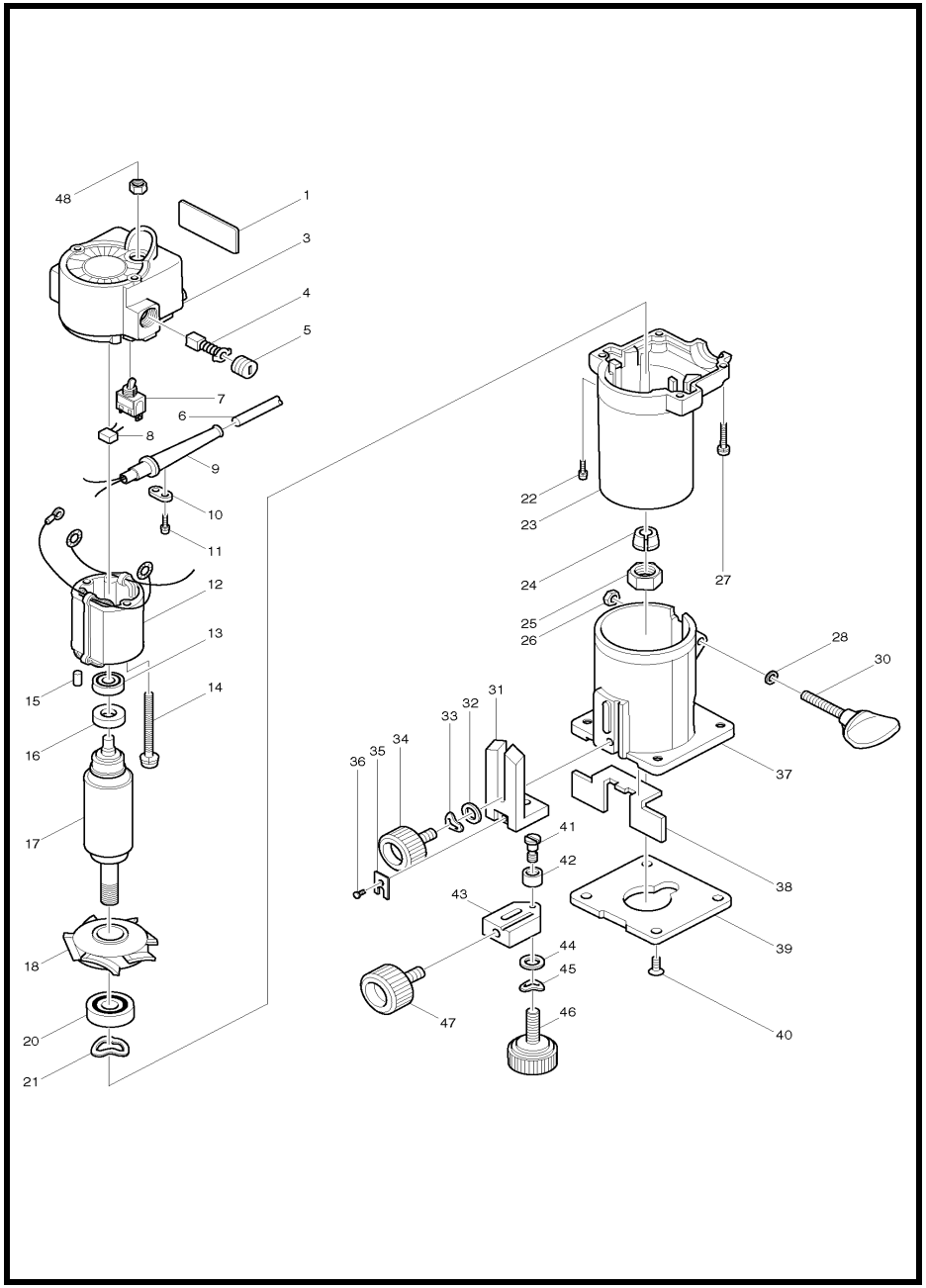

MODEL 3700B

ITEM	PARTS ID	DESCRIPTION	PRICE/BAHT
001	857337-4	NAME PLATE 3700B	80
003	159620-8	MOTOR REAR HOUSING COMPLETE	1,180
004	B-80232	CARBON BRUSH SET CB-51A	
005	643550-8	BRUSH HOLDER CAP 5-8	100
006	691015-4	POWER SUPPLY CORD 0.75-2-2.5	740
007	651472-8	SWITCH ST220KDY-1	1,220
009	682504-0	CORD GUARD 10-85	190
010	687001-1	STRAIN RELIEF	50
011	911133-5	PAN HEAD SCREW M4X18	50
012	521215-1	FIELD ASS'Y 220V	
013	211028-5	BALL BEARING 627LB	290
014	911200-6	PAN HEAD SCREW M4X70	100
015	263002-9	RUBBER PIN 4	30
016	681614-0	INSULATION WASHER	80
017	511698-3	ARMATURE ASS'Y 220V	
020	211236-8	BALL BEARING 6002DDW	550
021	253905-5	WAVE WASHER 23	50
022	911133-5	PAN HEAD SCREW M4X18	50
023	415132-4	MOTOR HOUSING	760
024	763608-8	COLLET CONE 1/4"	290
025	763606-2	COLLET NUT 6	320
026	252156-7	HEX. NUT M5-8	30
027	911148-2	PAN HEAD SCREW M4X25	70
028	941101-4	FLAT WASHER 5	20
030	251867-1	SCREW M5X30	150
031	317788-8	GUIDE HOLDER	690
032	941151-9	FLAT WASHER 6	30
033	253903-9	WAVE WASHER 6	90
034	265763-7	THUMB SCREW M6X25	70
035	341136-9	HOOK	90
036	265135-6	+ COUNTERSUNK HEAD SCREW M4.	70
037	411113-6	BASE	750
038	418647-0	CHIP DEFLECTOR	90
039	411114-4	BASE PROTECTOR	190
040	912112-6	COUNTERSUNK HEAD SCREW M4X1	30
041	251471-6	- FLAT HEAD SCREW M5	170
042	324378-0	ROLLER 11	90
043	317789-6	TRIMMER GUIDE	360
044	941151-9	FLAT WASHER 6	30
045	253903-9	WAVE WASHER 6	90
046	265763-7	THUMB SCREW M6X25	70
047	265764-5	THUMB SCREW M6	90
048	652102-4	HEX. NUT M12	80
400	251919-8	CAP SQUARE NECK BOLT M6X20	50
401	253903-9	WAVE WASHER 6	90
402	941151-9	FLAT WASHER 6	30
403	343593-7	GUIDE PLATE	270
404	343594-5	STRAIGHT GUIDE	350
405	934301-3	WING NUT M6	100
406	343577-5	TEMPLET GUIDE 10	150
407	D-09173	STRAIGHT BITS 1/4"	680
409	781003-0	WRENCH 10	190
410	781008-0	WRENCH 17	160
500	122391-0	STRAIGHT GUIDE ASS'Y	430

SERVICE DRAWING

MODEL NO. 3709

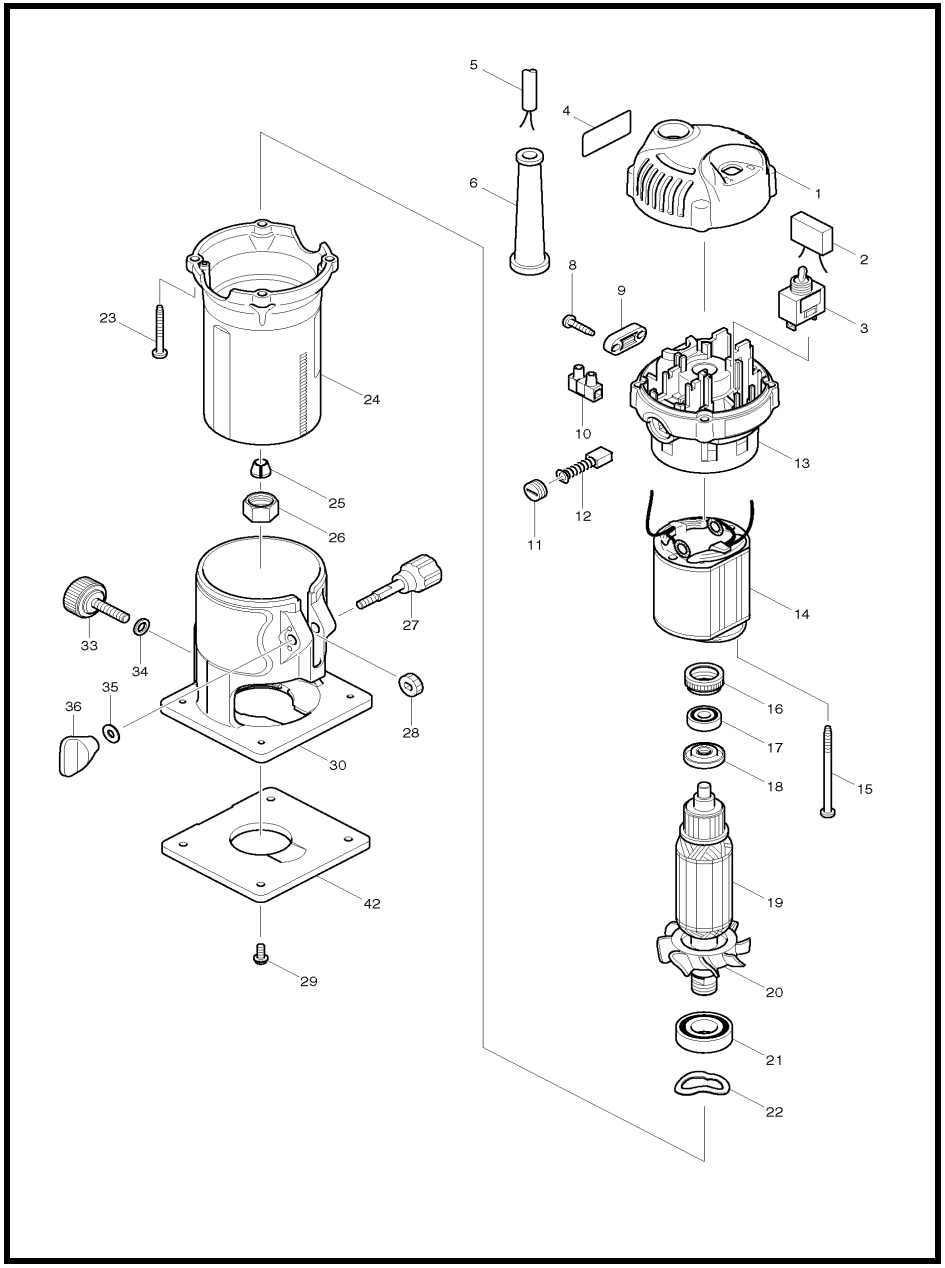

MODEL 3709

ITEM	PARTS ID	DESCRIPTION	PRICE/BAHT
001	419137-6	TOP COVER	180
003	651425-7	SWITCH STL115ADT	210
005	691065-9	POWER SUPPLY CORD 0.75-2-2.5	690
006	682569-2	CORD GUARD 8-85	110
008	266326-2	TAPPING SCREW 4X18	30
009	687124-5	STRAIN RELIEF	70
011	643550-8	BRUSH HOLDER CAP 5-8	100
012	B-80391	CARBON BRUSH SET CB-411A	
013	154669-3	BRACKET COMPLETE	420
014	590018-4	FIELD ASS'Y 220V	
015	266340-8	TAPPING SCREW 4X65	70
016	421494-0	RUBBER RING 19	250
017	210034-7	BALL BEARING 607LLB	180
018	681668-7	RESIN WASHER	60
019	515633-3	ARMATURE ASS'Y 220V	
019	510275-8	ARMATURE ASS'Y 220V	
020	241667-7	FAN 52	250
021	211223-7	BALL BEARING 6002DDW	560
022	267785-3	WAVE WASHER 23	60
023	266351-3	TAPPING SCREW 4X35	30
024	154668-5	MOTOR HOUSING COMPLETE	330
025	763663-0	COLLET CONE 6.35	320
026	763661-4	COLLET NUT 6	310
027	265771-8	THUMB SCREW M5X33	130
028	226217-9	SPUR GEAR 16	130
029	265142-9	+ PAN HEAD SCREW M4X10	70
030	419138-4	BASE	520
033	265763-7	THUMB SCREW M6X25	70
034	941151-9	FLAT WASHER 6	30
035	941101-4	FLAT WASHER 5	20
036	252652-5	THUMB NUT M5	90
042	410585-2	BASE PROTECTOR	110
A01	122703-7	TRIMMER GUIDE ASS'Y	280
A02	122704-5	STRAIGHT GUIDE ASS'Y	260
A03	343577-5	TEMPLET GUIDE 10	150
A04	781036-5	WRENCH 10	150
A05	781037-3	WRENCH 17	180
A06	418647-0	CHIP DEFLECTOR	90
A07	D-09173	STRAIGHT BITS 1/4"	680

SERVICE DRAWING

MODEL NO. 3901

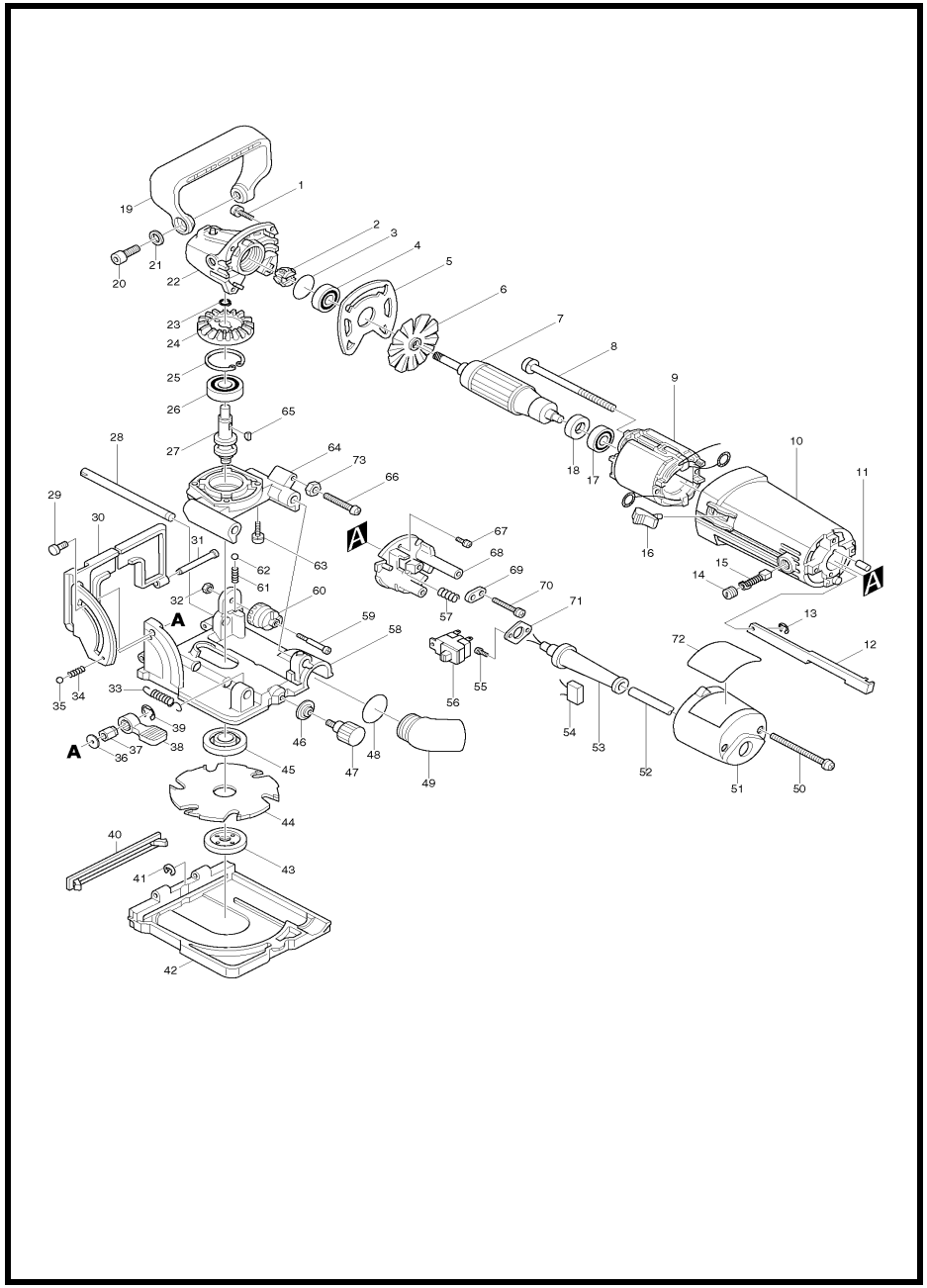

MODEL 3901

ITEM	PARTS ID	DESCRIPTION	PRICE/BAHT
001	911136-9	PAN HEAD SCREW M4X20	50
002	221357-8	SPIRAL BEVEL GEAR 11	680
003	213407-3	O RING 26	40
004	211088-7	BALL BEARING 6000DDW	300
005	341398-9	PLATE	150
007	511908-8	ARMATURE ASS'Y 220V	
008	911596-5	PAN HEAD SCREW M4X70	100
009	593138-3	FIELD ASS'Y 220V	
010	159283-0	MOTOR HOUSING COMPLETE	1,290
011	263002-9	RUBBER PIN 4	30
012	411328-5	SWITCH ROD	230
013	257903-1	STOP RING E-2.3	20
014	643550-8	BRUSH HOLDER CAP 5-8	100
015	B-80391	CARBON BRUSH SET CB-411A	
016	414663-0	SWITCH LEVER	190
017	210025-8	BALL BEARING 627LLB	250
018	681614-0	INSULATION WASHER	80
019	415253-2	GRIP	370
020	922422-3	HEX. SOCKET HEAD BOLT M8X16	80
021	941202-8	FLAT WASHER 8	50
022	157393-7	GEAR HOUSING COMPLETE	2,050
023	961052-5	RETAINING RING S-12	40
024	221356-0	SPIRAL BEVEL GEAR 36	1,060
025	962151-6	RETAINING RING R-32	90
026	211106-1	BALL BEARING 6201LLB	400
027	322658-8	SPINDLE	1,350
028	322657-0	ROD 10	390
029	251919-8	CAP SQUARE NECK BOLT M6X20	50
030	316494-2	FENCE	2,190
031	256689-4	PIN 4	160
032	931102-0	HEX. NUT M4	50
033	231795-6	TENSION SPRING 8	190
034	231282-5	COMPRESSION SPRING 2.4	50
035	216001-0	STEEL BALL 3.5	20
036	253804-1	FLAT WASHER 6	40
037	252133-9	HEX. NUT M6	220
038	272229-0	LEVER 40	290
039	961014-3	STOP RING E-8	30
040	162163-1	RUBBER FACING	410
041	961017-7	STOP RING E-3	20
042	316496-8	BLADE COVER	3,160
043	224505-8	LOCK NUT 10-40	290
044	B-20644	CUTTER 100MMX6T	1,570
045	224280-6	INNER FLANGE 40	410
046	232131-9	LEAF SPRING	170
047	265716-6	SCREW M5X10	180
048	213008-7	O RING 22.4	40
049	415252-4	DUST NOZZLE	280
050	911198-7	PAN HEAD SCREW M4X70	80
051	410190-5	REAR COVER	360
052	691015-4	POWER SUPPLY CORD 0.75-2-2.5	740
053	682504-0	CORD GUARD 10-85	190
055	911111-5	PAN HEAD SCREW M4X10	30
056	651601-3	SWITCH SS106AY-2	720
057	231223-1	COMPRESSION SPRING 6	80
058	316495-0	BASE	3,840
059	265026-1	+ PAN HEAD SCREW M4	170
060	316491-8	STOPPER	360
061	231282-5	COMPRESSION SPRING 2.4	50
062	216001-0	STEEL BALL 3.5	20
063	911136-9	PAN HEAD SCREW M4X20	50
064	316493-4	BEARING BOX	2,280
065	254002-0	WOODRUFF KEY 3	80
066	911267-4	PAN HEAD SCREW M5X45	60
067	911133-5	PAN HEAD SCREW M4X18	50
068	410191-3	SWITCH HOLDER	230
069	687001-1	STRAIN RELIEF	50
070	911128-8	PAN HEAD SCREW M4X16	30
071	687637-6	SET PLATE	80
073	931203-4	HEX. NUT M5	20
A01	921332-1	HEX. BOLT M6X20	40
A02	316492-6	CLAMP	390
A03	150455-0	ANGLE GUIDE COMPLETE	1,860
A04	226217-9	SPUR GEAR 16	130
A05	961017-7	STOP RING E-3	20
A06	253186-1	FLAT WASHER 7	100
A07	271415-0	KNOB 20	390
A08	232130-1	LEAF SPRING	80
A09	253804-1	FLAT WASHER 6	40
A10	252133-9	HEX. NUT M6	220
A11	272229-0	LEVER 40	290
A12	961014-3	STOP RING E-8	30
A13	782401-1	LOCK NUT WRENCH 20	200
A14	122474-6	DUST BAG ASS'Y	550
A16	415579-2	SET PLATE 4	410
B01	122473-8	ANGLE GUIDE ASS'Y	2,290

SERVICE DRAWING

MODEL NO. 4014N

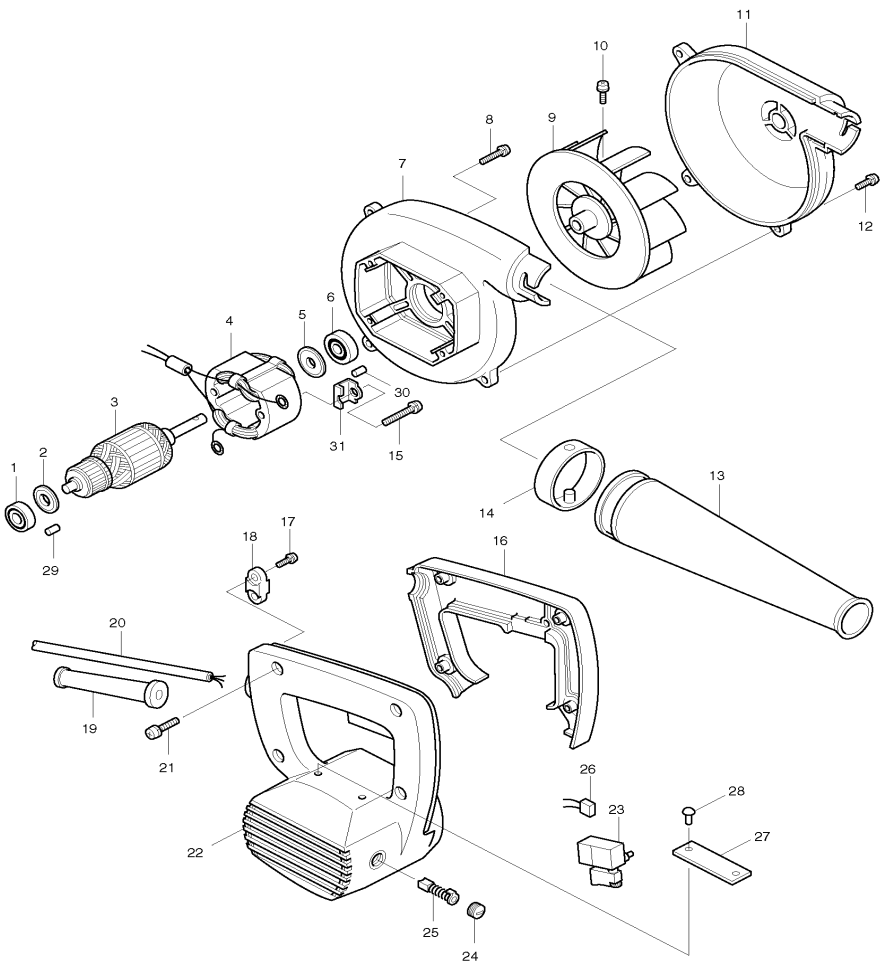

MODEL 4014N

ITEM	PARTS ID	DESCRIPTION	PRICE/BAHT
001	211033-2	BALL BEARING 608LB	200
002	213002-9	DUST SEAL 8	120
003	512838-6	ARMATURE ASS'Y 220V	
004	594078-8	FIELD ASS'Y 220V	
005	213052-4	DUST SEAL 9	120
006	210042-8	BALL BEARING 629LLB	250
007	159855-1	FAN HOUSING COMPLETE	1,050
008	911163-6	PAN HEAD SCREW M4X35	50
009	241888-1	FAN 110	690
010	911117-3	PAN HEAD SCREW M4X12	30
011	415921-7	FAN COVER	930
012	911133-5	PAN HEAD SCREW M4X18	50
013	132025-7	NOZZLE ASS'Y	460
014	414145-2	JOINT	130
015	911265-8	PAN HEAD SCREW M5X40	80
016	410480-6	HANDLE COVER	580
017	911133-5	PAN HEAD SCREW M4X18	50
018	687001-1	STRAIN RELIEF	50
019	682504-0	CORD GUARD 10-85	190
020	691015-4	POWER SUPPLY CORD 0.75-2-2.5	740
021	911148-2	PAN HEAD SCREW M4X25	70
022	157463-2	MOTOR HOUSING	1,740
023	651315-4	SWITCH SGEL208M	1,280
024	643600-9	BRUSH HOLDER CAP 6-10	70
025	B-80298	CARBON BRUSH SET CB-100A	
029	263002-9	RUBBER PIN 4	30
030	263002-9	RUBBER PIN 4	30
031	343657-7	RETAINER	80
400	122321-1	DUST BAG ASS'Y	940

SERVICE DRAWING

MODEL NO. 4014NV

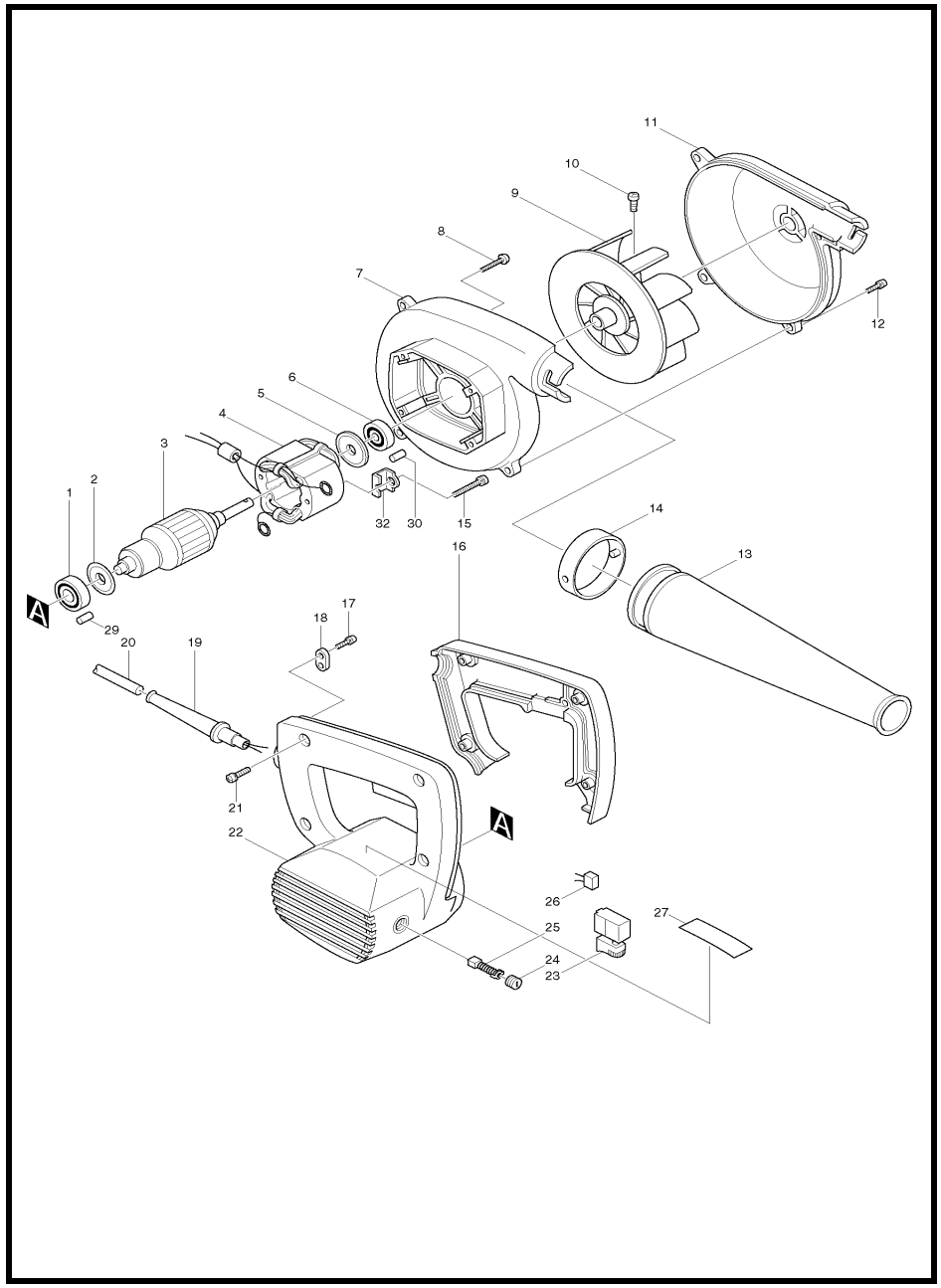

MODEL 4014NV

ITEM	PARTS ID	DESCRIPTION	PRICE/BAHT
001	211033-2	BALL BEARING 608LB	200
002	213002-9	DUST SEAL 8	120
003	512838-6	ARMATURE ASS'Y 220V	
004	522618-2	FIELD ASS'Y 220V	
005	213052-4	DUST SEAL 9	120
006	210042-8	BALL BEARING 629LLB	250
007	159855-1	FAN HOUSING COMPLETE	1,050
008	911163-6	PAN HEAD SCREW M4X35	50
009	241888-1	FAN 110	690
010	911117-3	PAN HEAD SCREW M4X12	30
011	415921-7	FAN COVER	930
012	911133-5	PAN HEAD SCREW M4X18	50
013	132025-7	NOZZLE ASS'Y	460
014	414145-2	JOINT	130
015	911265-8	PAN HEAD SCREW M5X40	80
016	410480-6	HANDLE COVER	580
017	911133-5	PAN HEAD SCREW M4X18	50
018	687001-1	STRAIN RELIEF	50
019	682504-0	CORD GUARD 10-85	190
020	691015-4	POWER SUPPLY CORD 0.75-2-2.5	740
021	911148-2	PAN HEAD SCREW M4X25	70
022	157463-2	MOTOR HOUSING	1,740
023	651256-4	SWITCH SGEL106CV-1A	1,790
024	643600-9	BRUSH HOLDER CAP 6-10	70
025	B-80298	CARBON BRUSH SET CB-100A	
029	263002-9	RUBBER PIN 4	30
030	263002-9	RUBBER PIN 4	30
032	343657-7	RETAINER	80
400	122321-1	DUST BAG ASS'Y	940

SERVICE DRAWING

MODEL NO. 407

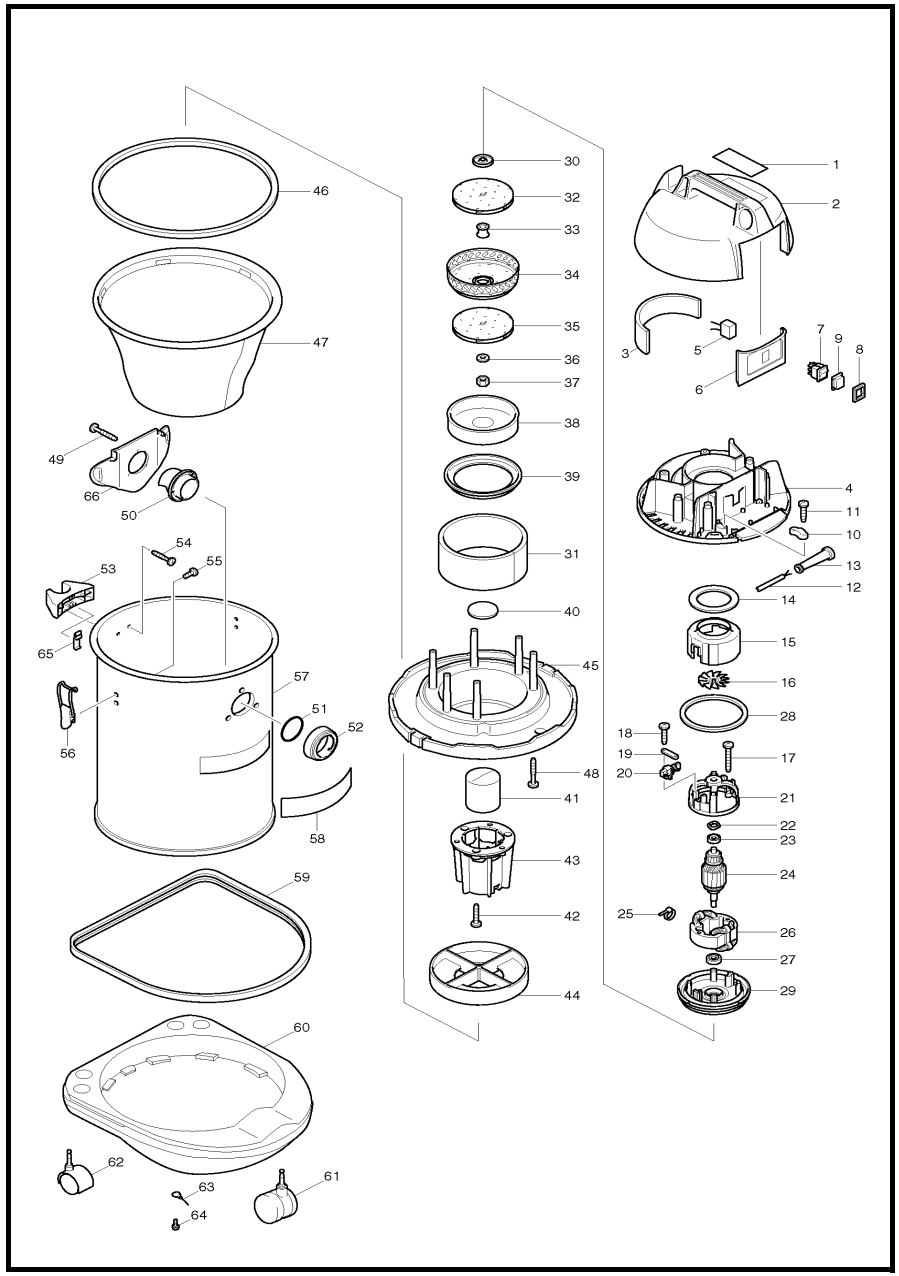

MODEL 407

ITEM	PARTS ID	DESCRIPTION	PRICE/BAHT
002	150603-1	COWLING COMPLETE	1,980
003	423277-4	BLOCK FILTER	320
004	158350-8	SEPARATOR COMPLETE	790
006	450081-8	SWITCH BASE	220
007	651565-1	SWITCH LLK35C65	550
008	416026-6	DUST COVER CAP	100
009	421552-2	DUST COVER	100
010	687053-2	STRAIN RELIEF	70
011	265995-6	TAPPING SCREW 4X18	40
012	691025-1	POWER SUPPLY CORD 0.75-2-5.0	1,070
013	682504-0	CORD GUARD 10-85	190
014	423279-0	SEAL RING 70	170
015	415932-2	MOTOR COVER	290
016	241512-6	FAN 62	170
017	266098-9	TAPPING SCREW BIND CT 5X60	80
018	266026-4	TAPPING SCREW BIND CT 4X12	30
019	344342-5	PLATE	50
020	195056-7	CARBON BRUSH SET CB-165	
021	316796-6	END BELL	680
022	267715-4	WAVE WASHER 20	50
023	211092-6	BALL BEARING 629DDW	330
024	516698-8	ARMATURE ASS'Y 220V	
025	687010-0	BAND	30
026	526033-2	FIELD ASS'Y 220V	
027	211087-9	BALL BEARING 6200DDW	380
028	424006-8	RUBBER RING 124	300
029	316797-4	BASE	1,190
030	316795-8	FLANGE	200
031	423280-5	BAND DAMPER	170
032	241906-5	FAN 125	630
033	316798-2	SPACER	170
034	344345-9	RETURN BASE	600
035	241906-5	FAN 125	630
036	316799-0	FLAT WASHER 10	120
037	931403-6	HEX. NUT M8	50
038	345671-9	FAN COVER	320
039	421947-9	SUPPORT RING	360
040	423278-2	GUARD	80
041	410221-0	FLOAT	230
042	265995-6	TAPPING SCREW 4X18	40
043	415931-4	FLOAT CAGE	400
044	415936-4	FRAME	420
045	419526-5	TANK COVER	1,910
046	421545-9	RUBBER RING 352	550
047	166042-5	CLOTH FILTER	3,290
048	266050-7	TAPPING SCREW 4X30	60
049	265999-8	TAPPING SCREW 4X25	30
050	417189-1	HOLDER	290
051	213655-4	O RING 56	80
052	415933-0	INLET	330
053	415935-6	PIPE HOLDER	230
054	265999-8	TAPPING SCREW 4X25	30
055	251291-8	+ SCREW M4X8	30
056	281215-0	HOOK	500
057	188298-0	TANK SET	9,130
058	819276-6	MAKITA LOGO LABEL	220
059	421542-5	RUBBER RING 370	490
060	417588-7	CASTER BASE	1,500
061	168289-7	CASTER 75	390
062	168310-2	CASTER 50	230
063	649150-2	EARTH LINE 120	210
064	911103-4	PAN HEAD SCREW M4X6	30
065	344873-4	HOOK	170
066	417587-9	HOLDER PLATE	310
A01	911133-5	PAN HEAD SCREW M4X18	50
A02	193326-8	HOSE COMPLETE 38-2.5	4,390
A03	122512-4	NOZZLE ASS'Y	1,840
A04	410306-2	CORNER NOZZLE	230
A05	192563-1	STRAIGHT PIPE	1,180
A06	192562-3	BENDING PIPE	1,480
A07	415946-1	STOPPER	240
B01	125120-0	MOTOR ASS'Y 220V	9,150
E01	195056-7	CARBON BRUSH SET CB-165	

SERVICE DRAWING

MODEL NO. 4100NB

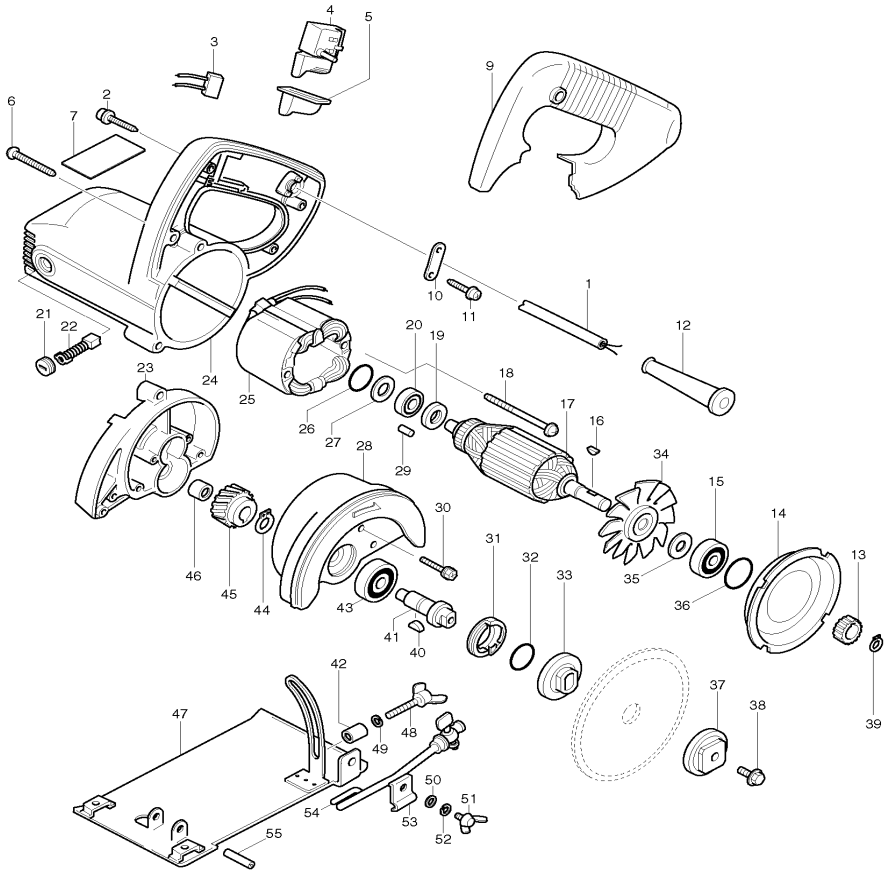

MODEL 4100NB

ITEM	PARTS ID	DESCRIPTION	PRICE/BAHT
001	691216-4	POWER SUPPLY CORD 1.25-2-2.5	950
002	911148-2	PAN HEAD SCREW M4X25	70
004	651204-3	SWITCH SGEL115CDY	420
005	421329-5	DUST COVER	170
006	911263-2	PAN HEAD SCREW M5X40	60
009	414712-3	HANDLE COVER	400
010	687054-0	STRAIN RELIEF	50
011	911133-5	PAN HEAD SCREW M4X18	50
012	682504-0	CORD GUARD 10-85	190
013	221776-8	HELICAL GEAR 19	610
014	343289-0	BAFFLE PLATE	120
015	210042-8	BALL BEARING 629LLB	250
016	254002-0	WOODRUFF KEY 3	80
017	516088-5	ARMATURE ASS'Y 220V	
018	911285-2	PAN HEAD SCREW M5X60	80
019	681613-2	INSULATION WASHER	80
020	211033-2	BALL BEARING 608LB	200
021	643750-0	BRUSH HOLDER CAP	70
022	B-80363	CARBON BRUSH SET CB-251A	
023	159771-7	GEAR HOUSING	1,590
024	159184-2	MOTOR HOUSING COMPLETE	2,180
025	520039-2	FIELD ASS'Y 220V	
026	213262-3	O RING 18	40
027	253192-6	FLAT WASHER 14	70
028	155410-7	BLADE CASE COMPLETE	1,470
029	263002-9	RUBBER PIN 4	30
030	925146-0	+ HEX. BOLT M4X25	110
031	285815-8	BEARING RETAINER 19-33	170
032	213255-0	O RING 18	30
033	224080-4	INNER FLANGE 36	340
034	241520-7	FAN 68	320
035	253741-9	FLAT WASHER 9	40
036	213407-3	O RING 26	40
037	224081-2	OUTER FLANGE 36	240
038	266133-3	HEX. SOCKET HEAD BOLT M6X20	80
039	961004-6	RETAINING RING S-8	20
040	254001-2	WOODRUFF KEY 4	80
041	321197-5	SPINDLE	690
042	257507-9	SLEEVE 7	100
043	211129-9	BALL BEARING 6201DDW	300
044	961052-5	RETAINING RING S-12	40
045	221777-6	HELICAL GEAR 41	760
046	212004-2	NEEDLE BEARING 810	290
047	164195-4	BASE	950
048	924341-9	WING BOLT M6X28	150
049	942151-2	SPRING WASHER 6	100
050	941102-2	FLAT WASHER 5	30
051	924206-5	WING BOLT M5X10	110
052	942101-7	SPRING WASHER 5	100
053	342291-0	PIPE HOLDER	90
054	164405-9	PIPE	1,190
055	951219-3	SPRING PIN 6-32	80
402	412010-9	VINYL TUBE 5X7X5000	270
403	781011-1	WRENCH 22	230
404	783203-8	HEX. WRENCH 5	100
405	410047-0	WRENCH HOLDER 5.6	100

SERVICE DRAWING

MODEL NO. 4100NH

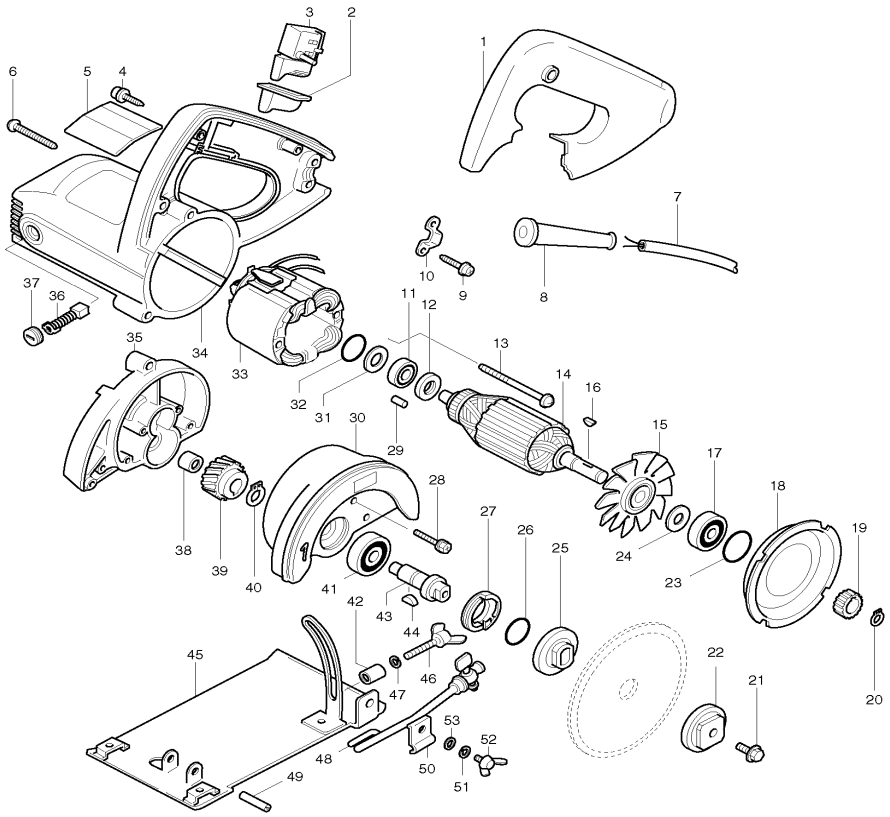

MODEL 4100NH

ITEM	PARTS ID	DESCRIPTION	PRICE/BAHT
001	415600-7	HANDLE COVER	390
002	421329-5	DUST COVER	170
003	651204-3	SWITCH SGEL115CDY	420
004	266045-0	TAPPING SCREW 4X20	50
005	859871-0	NAME PLATE 4100NH	150
006	911263-2	PAN HEAD SCREW M5X40	60
007	691015-4	POWER SUPPLY CORD 0.75-2-2.5	740
008	682504-0	CORD GUARD 10-85	190
009	265995-6	TAPPING SCREW 4X18	40
010	687053-2	STRAIN RELIEF	70
011	211033-2	BALL BEARING 608LB	200
012	681625-5	INSULATION WASHER	50
013	266029-8	TAPPING SCREW 5X65	130
014	516218-8	ARMATURE ASS'Y 220V	
015	240007-6	FAN 68	160
016	254002-0	WOODRUFF KEY 3	80
017	210042-8	BALL BEARING 629LLB	250
018	343289-0	BAFFLE PLATE	120
019	226683-0	HELICAL GEAR 17	350
020	961004-6	RETAINING RING S-8	20
021	265226-3	HEX. FLANGE HEAD BOLT M6X17	110
022	224081-2	OUTER FLANGE 36	240
023	213407-3	O RING 26	40
024	253741-9	FLAT WASHER 9	40
025	224080-4	INNER FLANGE 36	340
026	213255-0	O RING 18	30
027	285815-8	BEARING RETAINER 19-33	170
028	925146-0	+ HEX. BOLT M4X25	110
029	263002-9	RUBBER PIN 4	30
030	150647-1	BLADE CASE COMPLETE	1,210
031	253192-6	FLAT WASHER 14	70
032	213262-3	O RING 18	40
033	594343-5	FIELD ASS'Y 220V	
034	159767-8	MOTOR HOUSING	1,840
035	159911-7	GEAR HOUSING COMPLETE	1,590
036	B-80379	CARBON BRUSH SET CB-303A	190
037	643750-0	BRUSH HOLDER CAP	70
038	212004-2	NEEDLE BEARING 810	290
039	226684-8	HELICAL GEAR 41	410
040	961052-5	RETAINING RING S-12	40
041	211129-9	BALL BEARING 6201DDW	300
042	257507-9	SLEEVE 7	100
043	321197-5	SPINDLE	690
044	254001-2	WOODRUFF KEY 4	80
045	164195-4	BASE	950
046	924341-9	WING BOLT M6X28	150
047	942151-2	SPRING WASHER 6	100
048	164405-9	PIPE	1,190
049	951219-3	SPRING PIN 6-32	80
050	342291-0	PIPE HOLDER	90
051	942101-7	SPRING WASHER 5	100
052	924206-5	WING BOLT M5X10	110

ITEM	PARTS ID	DESCRIPTION	PRICE/BAHT
A01	421835-0	WATER SUPPLY PLUG	230
A02	412010-9	VINYL TUBE 5X7X5000	270
A03	781011-1	WRENCH 22	230
A04	782209-3	SOCKET WRENCH 9	220

SERVICE DRAWING

MODEL NO. 4107R

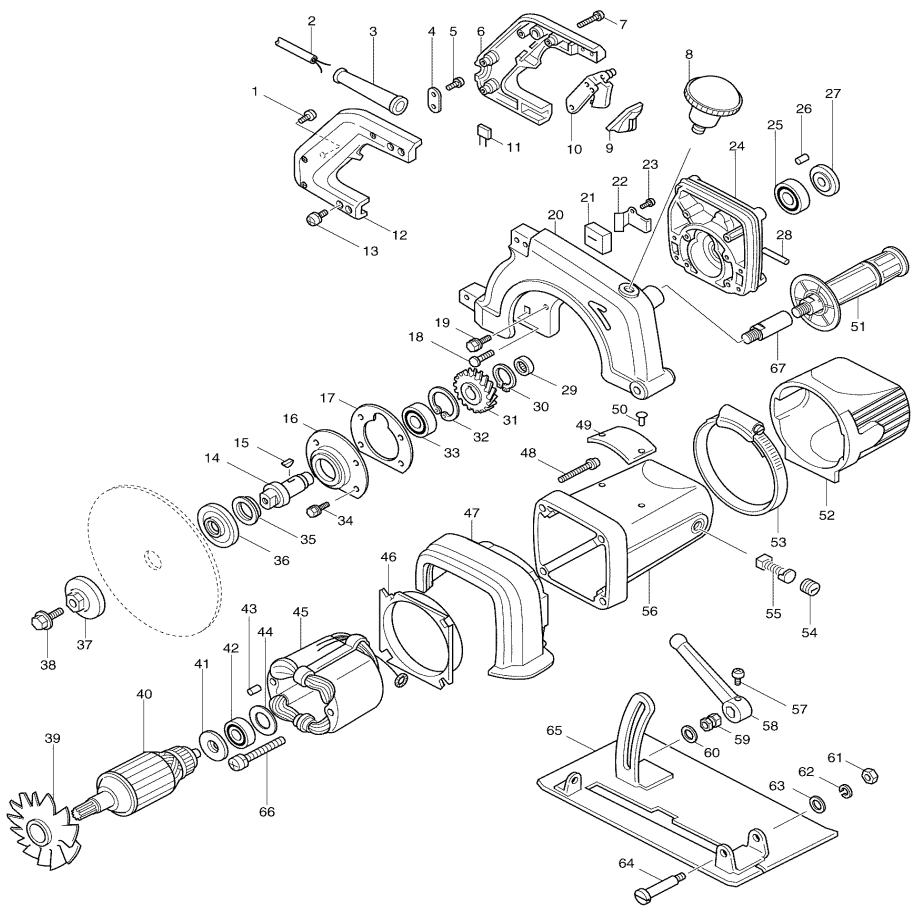

MODEL 4107R

ITEM	PARTS ID	DESCRIPTION	PRICE/BAHT
001	911103-4	PAN HEAD SCREW M4X6	30
002	691227-9	POWER SUPPLY CORD 1.25-2-5.0	1,290
003	682505-8	CORD GUARD 10-90	150
004	687000-3	STRAIN RELIEF	40
005	911128-8	PAN HEAD SCREW M4X16	30
006	183178-5	HANDLE SET	1,070
007	911153-9	PAN HEAD SCREW M4X28	30
008	271207-7	KNOB 55	330
009	421224-9	DUST COVER	160
010	651018-0	SWITCH HPAHR2-3S	970
012	183178-5	HANDLE SET	1,070
013	911213-7	PAN HEAD SCREW M5X12	40
014	325402-2	SPINDLE	1,550
015	254001-2	WOODRUFF KEY 4	80
016	315769-6	BEARING BOX	530
017	442033-3	PACKING	100
018	265835-8	CAP SQUARE NECK BOLT M8X30	130
019	925231-9	+ HEX. BOLT M5X20	50
020	317317-7	BLADE CASE	2,840
021	685700-9	SPONGE SHEET	30
022	343330-9	LEAD COVER	230
023	911106-8	PAN HEAD SCREW M4X8	30
024	151874-3	GEAR HOUSING COMPLETE	2,030
025	211228-7	BALL BEARING 6202DDW	430
026	263005-3	RUBBER PIN 6	30
027	421281-7	WATERPROOF RING 34.5	210
028	422016-9	SEAL RUBBER	80
029	212101-4	NEEDLE BEARING 1210	360
030	961057-5	RETAINING RING S-17	40
031	221607-1	HELICAL GEAR 45	1,370
032	962157-4	RETAINING RING R-40	110
033	211278-2	BALL BEARING 6203DDW	530
034	925221-2	+ HEX. BOLT M5X16	40
035	421280-9	WATERPROOF RING 36	100
036	224200-0	INNER FLANGE 55	670
037	224286-4	OUTER FLANGE 55	700
038	251644-1	HEX. FLANGE HEAD BOLT M8X20	110
039	241072-8	FAN 97	320
041	681623-9	INSULATION WASHER	80
042	211068-3	BALL BEARING 6200LB	370
043	263002-9	RUBBER PIN 4	30
044	253794-8	FLAT WASHER 18	80
045	524465-7	FIELD ASS'Y 220V	
046	343259-9	BAFFLE PLATE	230
047	410920-4	COVER B	960
048	911263-2	PAN HEAD SCREW M5X40	60
049	855933-2	NAME PLATE 4107R	230
050	953106-2	RIVET 0-5	20
051	152492-0	GRIP 36 COMPLETE	230
052	410919-9	COVER A	1,970
053	163255-9	CLAMP 120	400
054	643650-4	BRUSH HOLDER CAP 6.5-13.5	70

ITEM	PARTS ID	DESCRIPTION	PRICE/BAHT
056	153416-9	MOTOR HOUSING COMPLETE	2,120
057	911207-2	PAN HEAD SCREW M5X10	20
058	133014-5	LEVER 98 ASS'Y	470
059	252003-2	HEX. NUT M8-14	120
060	253731-2	FLAT WASHER 8	70
061	252105-4	HEX. LOCK NUT M8-13	80
062	942201-3	SPRING WASHER 8	110
063	941201-0	FLAT WASHER 8	110
064	251407-5	- FLAT HEAD SCREW M8	170
065	164655-6	BASE	2,760
066	911300-2	PAN HEAD SCREW M5X75	100
067	324206-9	JOINT THREAD M12	550
400	421835-0	WATER SUPPLY PLUG	230
401	782212-4	SOCKET WRENCH 13	290
402	782017-2	WRENCH 22	290
403	412028-0	VINYL TUBE 5X9X5000	620
404	164350-8	PIPE	1,820
406	323601-0	NUT	270
500	133018-7	WATER SUPPLY ASS'Y	730

SERVICE DRAWING

MODEL NO. 4110C

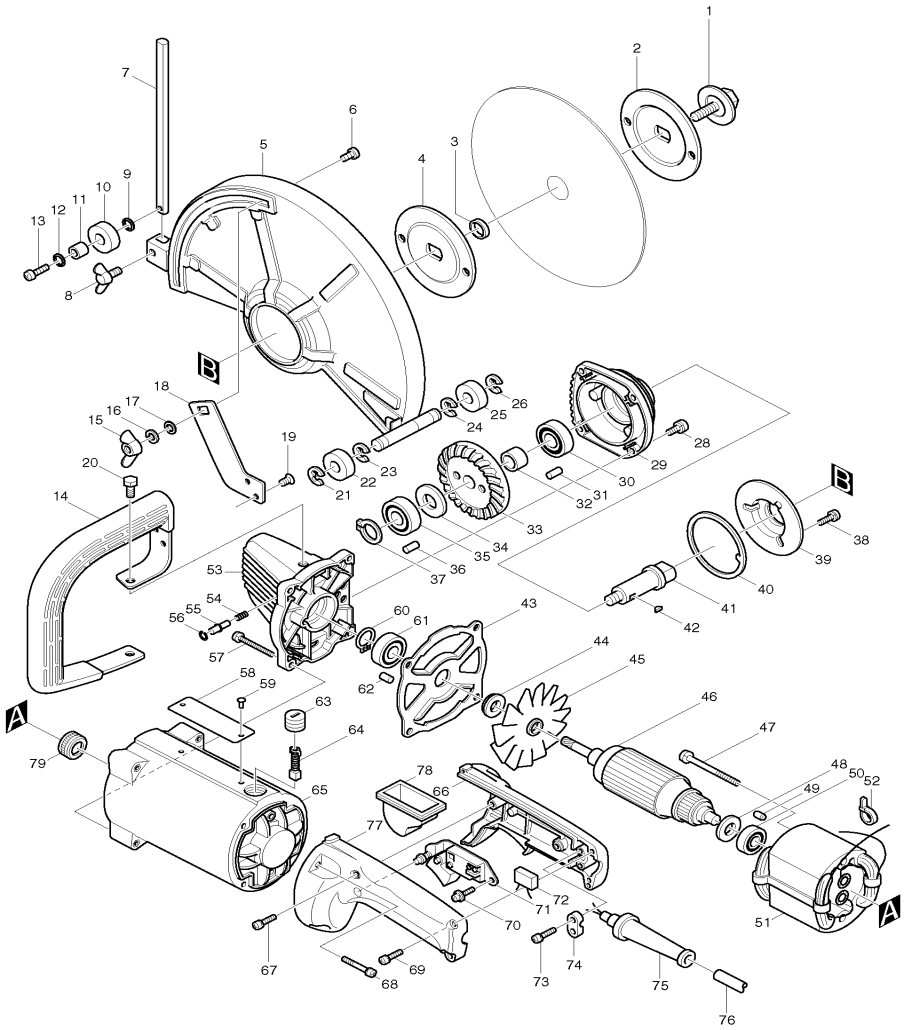

MODEL 4110C

ITEM	PARTS ID	DESCRIPTION	PRICE/BAHT
001	265265-3	HEX. BOLT M10X25	270
002	224184-2	INNER FLANGE 100	880
003	257054-0	RING 20	200
004	224184-2	INNER FLANGE 100	880
005	150180-3	SAFETY COVER COMPLETE	4,170
006	251918-0	CAP SQUARE NECK BOLT M8X24	80
007	256923-2	ROD 12-210	490
008	251859-0	WING BOLT M8X12	230
009	253143-9	FLAT WASHER 12	50
010	257091-4	RING 12	230
011	257580-9	SLEEVE 8	100
012	253143-9	FLAT WASHER 12	50
013	911432-5	PAN HEAD SCREW M8X20	80
014	273615-8	GRIP	1,150
015	934401-9	WING NUT M8	110
016	942201-3	SPRING WASHER 8	110
017	941201-0	FLAT WASHER 8	110
018	341854-9	LOCK PLATE	270
019	912202-5	COUNTERSUNK HEAD SCREW M5X8	20
020	921422-0	HEX. BOLT M8X16	80
021	961015-1	STOP RING E-9	40
022	257091-4	RING 12	230
023	961015-1	STOP RING E-9	40
024	961015-1	STOP RING E-9	40
025	257091-4	RING 12	230
026	961015-1	STOP RING E-9	40
028	922236-0	HEX. SOCKET HEAD BOLT M5X22	50
029	152203-3	BEARING BOX COMPLETE	1,530
030	211256-2	BALL BEARING 6203LLB	520
031	263002-9	RUBBER PIN 4	30
032	257576-0	SLEEVE 17	230
033	221353-6	SPIRAL BEVEL GEAR 55	4,540
034	253180-3	FLAT WASHER 10	80
035	211066-7	BALL BEARING 6200LLB	410
036	263002-9	RUBBER PIN 4	30
037	961006-2	RETAINING RING S-10	20
038	911206-4	PAN HEAD SCREW M5X10	20
039	162107-1	PRESSURE PLATE	320
040	341853-1	PLATE B	120
041	321443-6	SPINDLE	1,500
042	254001-2	WOODRUFF KEY 4	80
043	343453-3	BAFFLE PLATE	910
044	321444-4	BUSH 15	230
045	241317-4	FAN 100	670
046	514713-2	ARMATURE ASS'Y 220V	
047	911938-3	PAN HEAD SCREW M5X85	120
048	681635-2	INSULATION WASHER	80
050	211088-7	BALL BEARING 6000DDW	300
051	524673-0	FIELD ASS'Y 220V	
052	687010-0	BAND	30
053	157905-6	GEAR HOUSING	2,970
054	231240-1	COMPRESSION SPRING 7	20

ITEM	PARTS ID	DESCRIPTION	PRICE/BAHT
056	231928-3	RING SPRING 8	40
057	911261-6	PAN HEAD SCREW M5X40	50
059	953106-2	RIVET 0-5	20
060	961055-9	RETAINING RING S-15	50
061	211206-7	BALL BEARING 6202LLB	460
062	263005-3	RUBBER PIN 6	30
063	643650-4	BRUSH HOLDER CAP 6.5-13.5	70
064	B-80329	CARBON BRUSH SET CB-153A	
065	159687-6	MOTOR HOUSING COMPLETE	2,180
066	181456-7	HANDLE SET	1,260
067	911148-2	PAN HEAD SCREW M4X25	70
068	911248-8	PAN HEAD SCREW M5X28	50
069	911148-2	PAN HEAD SCREW M4X25	70
070	911104-2	PAN HEAD SCREW M4X6	30
071	651033-4	SWITCH HPAHR2-35S	1,410
073	911133-5	PAN HEAD SCREW M4X18	50
074	687000-3	STRAIN RELIEF	40
075	682505-8	CORD GUARD 10-90	150
076	691216-4	POWER SUPPLY CORD 1.25-2-2.5	950
077	181456-7	HANDLE SET	1,260
079	421490-8	RUBBER RING 26	360
401	782210-8	SOCKET WRENCH 17	220
403	824697-9	PLASTIC CARRYING CASE	5,400
404	122263-9	BASE SET	1,470
405	941201-0	FLAT WASHER 8	110
406	942201-3	SPRING WASHER 8	110
407	924416-4	WING BOLT M8X15	150
408	941151-9	FLAT WASHER 6	30
409	942151-2	SPRING WASHER 6	100
410	924311-8	WING BOLT M6X12	100
914	B-80329	CARBON BRUSH SET CB-153A	

SERVICE DRAWING

MODEL NO. 4112HS

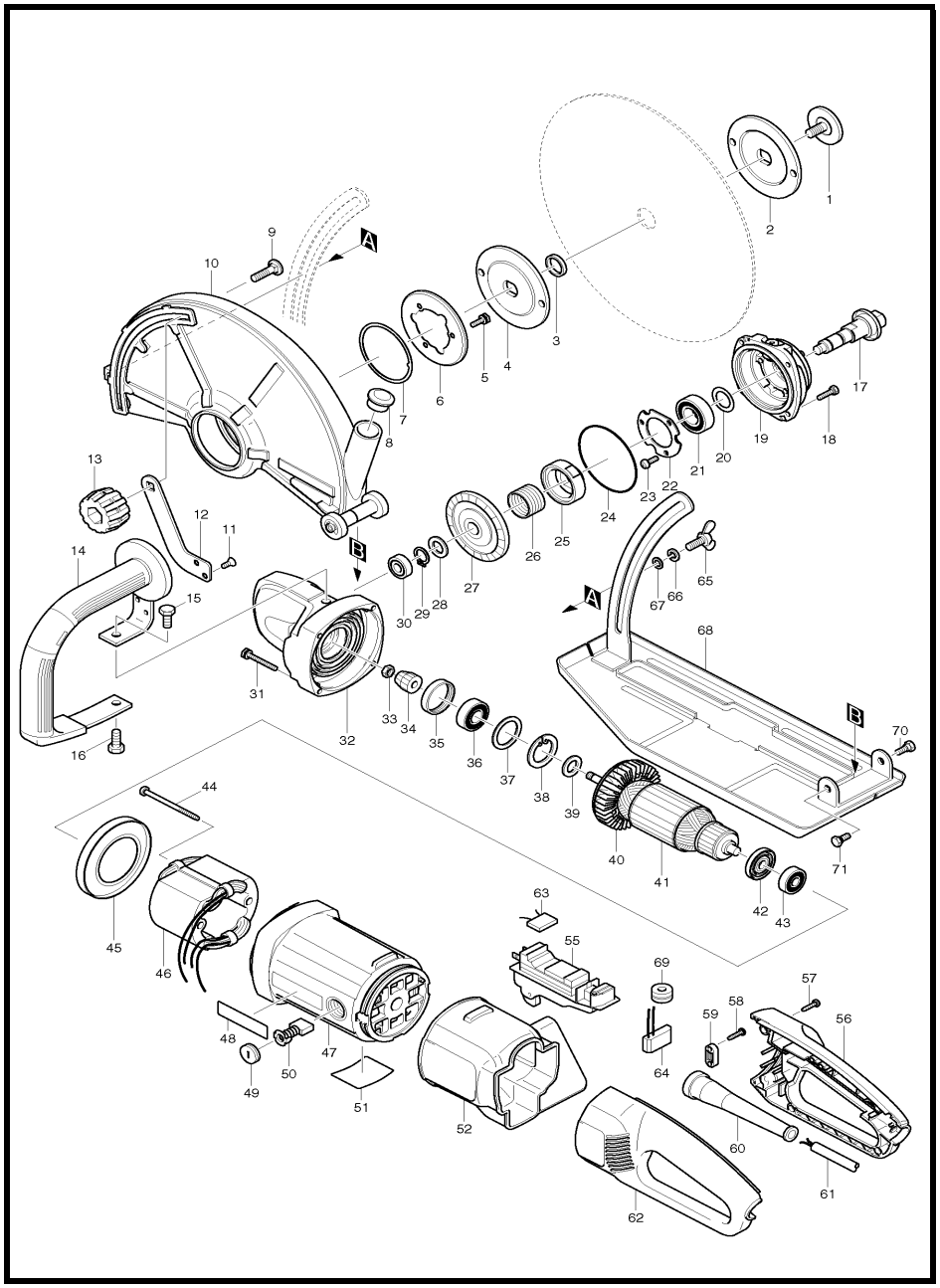

MODEL 4112HS

ITEM	PARTS ID	DESCRIPTION	PRICE/BAHT
001	265265-3	HEX. BOLT M10X25	270
002	224184-2	INNER FLANGE 100	880
003	257054-0	RING 20	200
004	224184-2	INNER FLANGE 100	880
005	925216-5	+ HEX. BOLT M5X14	30
006	345269-2	PRESSURE PLATE	290
007	341853-1	PLATE B	120
008	286289-6	CAP 32	330
009	265845-5	CAP SQUARE NECK BOLT M8X30	110
010	125185-2	WHEEL COVER ASS'Y	7,760
011	912202-5	COUNTERSUNK HEAD SCREW M5X8	20
012	345291-9	LOCK PLATE	270
013	252648-6	THUMB NUT M8	390
014	273655-6	GRIP	2,390
015	921432-7	HEX. BOLT M8X20	60
016	921432-7	HEX. BOLT M8X20	60
017	153541-6	SPINDLE COMPLETE	2,650
018	265502-5	+ HEX. BOLT M5X20	80
019	153539-3	BEARING BOX COMPLETE	2,760
020	267041-1	FLAT WASHER 20	80
021	211326-7	BALL BEARING 6004DDW	630
022	285708-9	BEARING RETAINER 50	240
023	911221-8	PAN HEAD SCREW M5X16	30
024	213757-6	O RING 80	120
025	331644-8	LOCK SLEEVE	1,340
026	233922-1	LOCK SPRING 24	710
027	227438-6	SPIRAL BEVEL GEAR 48	3,940
028	267251-0	FLAT WASHER 15	340
029	961055-9	RETAINING RING S-15	50
030	211061-7	BALL BEARING 6000LLB	390
031	925261-0	+ HEX. BOLT M5X40	70
032	153542-4	GEAR HOUSING COMPLETE	3,530
033	252178-7	HEX. NUT M8-12	60
034	227440-9	SPIRAL BEVEL GEAR 9	1,340
035	262554-7	RUBBER RING 36	100
036	211228-7	BALL BEARING 6202DDW	430
037	267250-2	FLAT WASHER 30	170
038	962157-4	RETAINING RING R-40	110
039	267251-0	FLAT WASHER 15	340
040	240060-2	FAN 80	
041	516888-3	ARMATURE ASS'Y 220-240V	
042	681630-2	INSULATION WASHER	150
043	211087-9	BALL BEARING 6200DDW	380
044	266059-9	TAPPING SCREW 5X75	150
045	416131-9	BAFFLE PLATE	120
046	626133-9	FIELD 220-240V	
047	183564-0	MOTOR HOUSING	2,090
048	819064-1	MAKITA MARK	70
049	643710-2	BRUSH HOLDER CAP	150
050	B-80357	CARBON BRUSH SET CB-204A	
052	421831-8	DUST COVER	550
055	651181-9	SWITCH 1362.0114	2,050

ITEM	PARTS ID	DESCRIPTION	PRICE/BAHT
057	266045-0	TAPPING SCREW 4X20	50
058	265995-6	TAPPING SCREW 4X18	40
059	687053-2	STRAIN RELIEF	70
060	682560-0	CORD GUARD 10	170
061	691216-4	POWER SUPPLY CORD 1.25-2-2.5	950
062	183615-9	HANDLE SET	1,530
064	631553-4	SOFT START CIRCUIT	2,140
065	924426-1	WING BOLT M8X20	150
066	942201-3	SPRING WASHER 8	110
067	941201-0	FLAT WASHER 8	110
068	165343-8	BASE	1,070
070	265506-7	SHOULDER HEX. BOLT M6	210
071	265506-7	SHOULDER HEX. BOLT M6	210
A01	782210-8	SOCKET WRENCH 17	220
A03	B-80357	CARBON BRUSH SET CB-204A	

SERVICE DRAWING

MODEL NO. 4114S

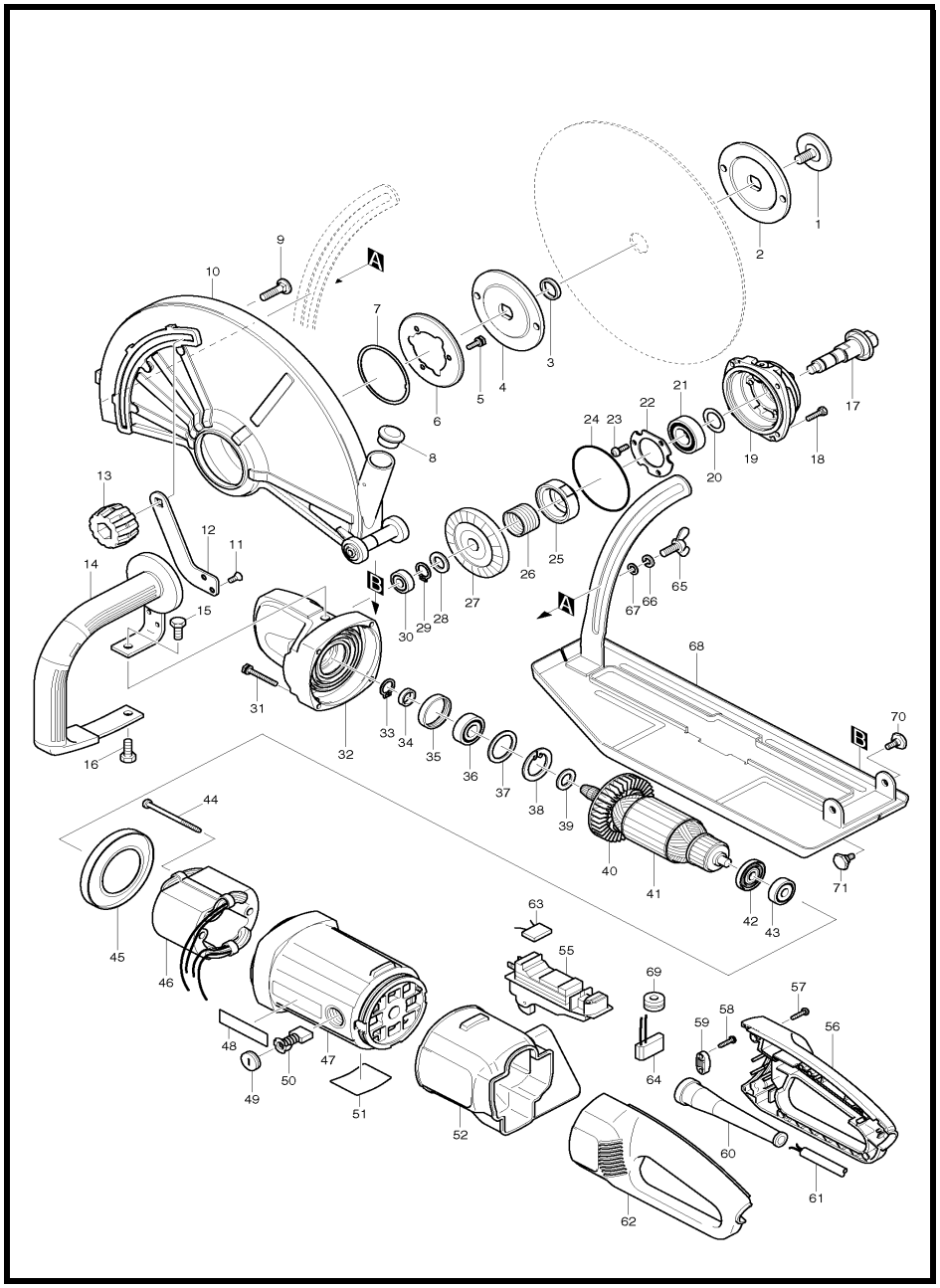

MODEL 4114S

ITEM	PARTS ID	DESCRIPTION	PRICE/BAHT
001	265265-3	HEX. BOLT M10X25	270
002	224184-2	INNER FLANGE 100	880
003	257054-0	RING 20	200
004	224184-2	INNER FLANGE 100	880
005	925216-5	+ HEX. BOLT M5X14	30
006	345269-2	PRESSURE PLATE	290
007	341853-1	PLATE B	120
008	286289-6	CAP 32	330
009	265845-5	CAP SQUARE NECK BOLT M8X30	110
010	125336-7	WHEEL COVER ASS'Y	10,250
011	912202-5	COUNTERSUNK HEAD SCREW M5X8	20
012	345291-9	LOCK PLATE	270
013	252648-6	THUMB NUT M8	390
014	273655-6	GRIP	2,390
015	921432-7	HEX. BOLT M8X20	60
016	921432-7	HEX. BOLT M8X20	60
017	153541-6	SPINDLE COMPLETE	2,650
018	265502-5	+ HEX. BOLT M5X20	80
019	153539-3	BEARING BOX COMPLETE	2,760
020	267041-1	FLAT WASHER 20	80
021	211326-7	BALL BEARING 6004DDW	630
022	285708-9	BEARING RETAINER 50	240
023	911221-8	PAN HEAD SCREW M5X16	30
024	213757-6	O RING 80	120
025	331644-8	LOCK SLEEVE	1,340
026	233922-1	LOCK SPRING 24	710
027	227439-4	SPIRAL BEVEL GEAR 57	2,800
028	267251-0	FLAT WASHER 15	340
029	961055-9	RETAINING RING S-15	50
030	211061-7	BALL BEARING 6000LLB	390
031	925261-0	+ HEX. BOLT M5X40	70
032	153542-4	GEAR HOUSING COMPLETE	3,530
033	961055-9	RETAINING RING S-15	50
034	257053-2	RING 15	150
035	262554-7	RUBBER RING 36	100
036	211228-7	BALL BEARING 6202DDW	430
037	267250-2	FLAT WASHER 30	170
038	962157-4	RETAINING RING R-40	110
039	267251-0	FLAT WASHER 15	340
041	516868-9	ARMATURE ASS'Y 220-240V	
042	681630-2	INSULATION WASHER	150
043	211087-9	BALL BEARING 6200DDW	380
044	266059-9	TAPPING SCREW 5X75	150
045	416131-9	BAFFLE PLATE	120
046	626128-2	FIELD 220V	
047	183564-0	MOTOR HOUSING	2,090
048	819064-1	MAKITA MARK	70
049	643710-2	BRUSH HOLDER CAP	150
050	B-80357	CARBON BRUSH SET CB-204A	
052	421831-8	DUST COVER	550
055	651181-9	SWITCH 1362.0114	2,050
056	183615-9	HANDLE SET	1,530
058	265995-6	TAPPING SCREW 4X18	40
059	687053-2	STRAIN RELIEF	70
060	682560-0	CORD GUARD 10	170
061	691216-4	POWER SUPPLY CORD 1.25-2-2.5	950
062	183615-9	HANDLE SET	1,530
064	631553-4	SOFT START CIRCUIT	2,140
065	924426-1	WING BOLT M8X20	150
066	942201-3	SPRING WASHER 8	110
067	941201-0	FLAT WASHER 8	110
068	165431-1	BASE	1,530
070	265557-0	SHOULDER HEX. BOLT M6	360
071	265557-0	SHOULDER HEX. BOLT M6	360
A01	782210-8	SOCKET WRENCH 17	220
A02	B-80357	CARBON BRUSH SET CB-204A	

SERVICE DRAWING

MODEL NO. 4131

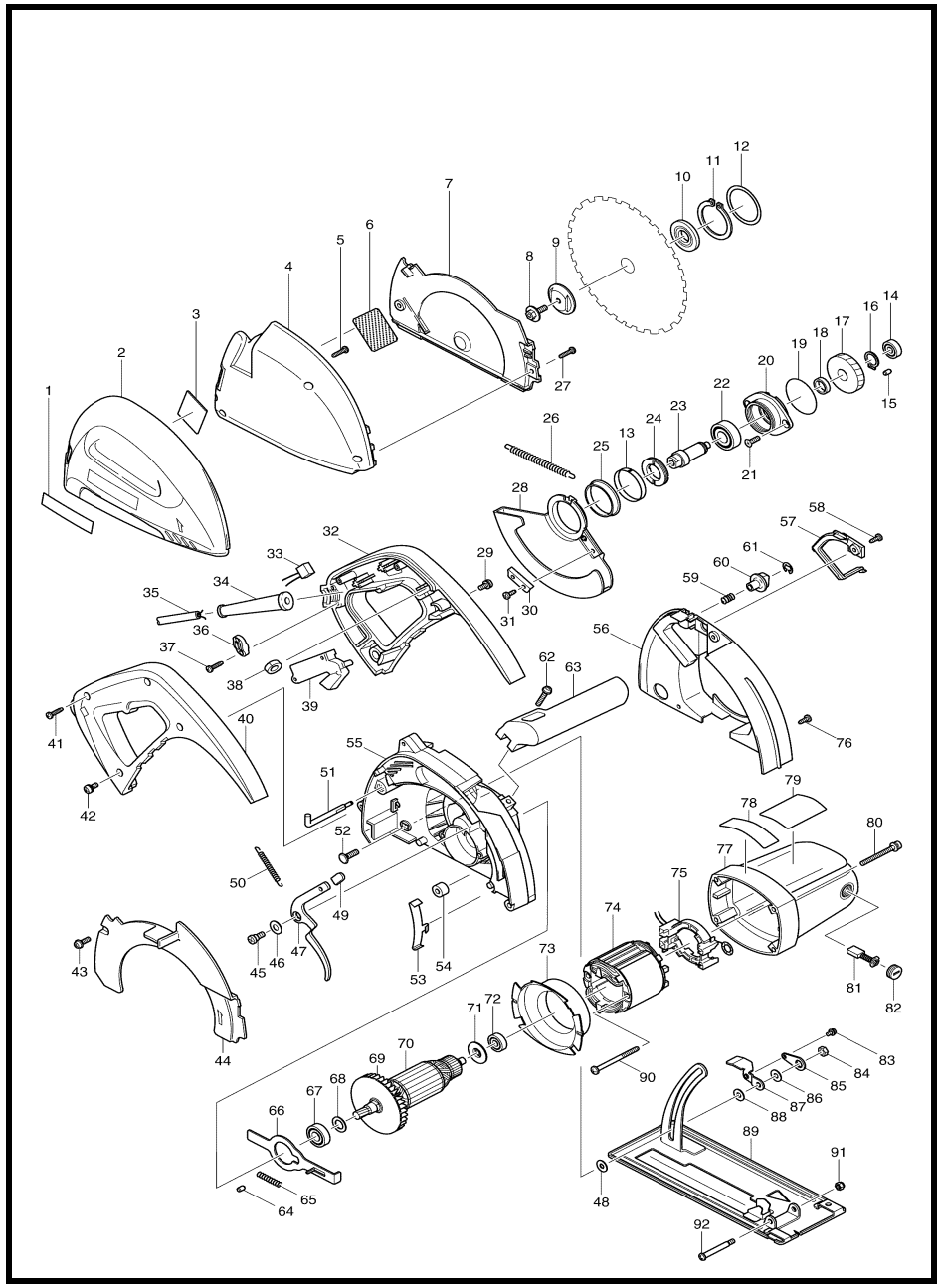

MODEL 4131

ITEM	PARTS ID	DESCRIPTION	PRICE/BAHT
002	183837-1	DUST CASE COVER	790
003	431005-3	HEAT RESISTING GLASS	870
004	317776-5	DUST CASE	1,330
005	265995-6	TAPPING SCREW 4X18	40
006	343760-4	PUNCHING METAL COVER	230
007	317777-3	DUST PLATE	950
008	266458-5	HEX.SOCKET HEX.BOLT M6X18	40
009	224366-6	OUTER FLANGE 40	500
010	224370-5	INNER FLANGE 40	360
011	961201-4	RETAINING RING S-42	100
012	267784-5	WASHER 42	150
013	343759-9	THICKNESS RING	210
014	211031-6	BALL BEARING 608LLB	190
015	263002-9	RUBBER PIN 4	30
016	961055-9	RETAINING RING S-15	50
017	226591-5	HELICAL GEAR 48	820
018	257053-2	RING 15	150
019	213621-1	O RING 46	100
020	316579-4	BEARING BOX	640
021	251372-8	+ COUNTERSUNK HEAD SCREW M5	80
022	211228-7	BALL BEARING 6202DDW	430
023	324475-2	SPINDLE	1,350
024	285807-7	BEARING RETAINER 22-36	170
025	345422-0	SPACER	100
026	231828-7	TENSION SPRING 4	80
027	265995-6	TAPPING SCREW 4X18	40
028	317775-7	SAFETY COVER	1,150
029	911213-7	PAN HEAD SCREW M5X12	40
030	344944-7	SUB PLATE	190
031	266026-4	TAPPING SCREW BIND CT 4X12	30
032	182648-1	HANDLE SET	950
034	682505-8	CORD GUARD 10-90	150
035	691015-4	POWER SUPPLY CORD 0.75-2-2.5	740
036	687053-2	STRAIN RELIEF	70
037	265995-6	TAPPING SCREW 4X18	40
038	421492-4	SPONGE RING	80
039	651054-6	SWITCH TG71C-2	1,230
040	182648-1	HANDLE SET	950
041	265995-6	TAPPING SCREW 4X18	40
042	911213-7	PAN HEAD SCREW M5X12	40
043	911223-4	PAN HEAD SCREW M5X16	40
044	317778-1	BLADE COVER	890
045	251267-5	+ PAN HEAD SCREW M6	90
046	941201-0	FLAT WASHER 8	110
047	345421-2	OPEN LEVER	230
048	253783-3	FLAT WASHER 6	50
049	421903-9	RUBBER CAP	230
050	231823-7	TENSION SPRING 4	120
051	324476-0	HOOK	590
052	266031-1	CAP SQUARE NECK BOLT M6X20	160
053	343758-1	PROTECTOR	190
054	262511-5	RUBBER SLEEVE 6	100

ITEM	PARTS ID	DESCRIPTION	PRICE/BAHT
056	418612-9	GEAR HOUSING COVER	650
057	418613-7	LEAD COVER	200
058	266026-4	TAPPING SCREW BIND CT 4X12	30
059	231402-1	COMPRESSION SPRING 7	80
060	271421-5	THUMB PIPE 23	220
061	961017-7	STOP RING E-3	20
062	911243-8	PAN HEAD SCREW M5X25	30
063	415469-9	GRIP	570
064	263002-9	RUBBER PIN 4	30
065	233092-6	COMPRESSION SPRING 5	50
066	343832-5	SHAFT LOCK	270
067	211131-2	BALL BEARING 6001DDW	310
068	253744-3	FLAT WASHER 12	50
069	241876-8	FAN 76	240
070	513578-9	ARMATURE ASS'Y 220-240V	
071	681634-4	INSULATION WASHER	120
072	211031-6	BALL BEARING 608LLB	190
073	415467-3	BAFFLE PLATE	160
074	634513-5	FIELD 220-240V	
075	638358-3	SUPPORT COMPLETE	550
076	266026-4	TAPPING SCREW BIND CT 4X12	30
077	159685-0	MOTOR HOUSING COMPLETE	1,660
078	816816-1	INDICATION LABEL	110
080	911263-2	PAN HEAD SCREW M5X40	60
081	B-80379	CARBON BRUSH SET CB-303A	190
082	643750-0	BRUSH HOLDER CAP	70
083	911108-4	PAN HEAD SCREW M4X8	20
084	252135-5	HEX. NUT	210
085	341718-7	LOCK PLATE	100
086	253804-1	FLAT WASHER 6	40
087	342907-7	LEVER PLATE	170
088	253804-1	FLAT WASHER 6	40
089	165387-8	BASE	2,750
090	266029-8	TAPPING SCREW 5X65	130
091	252103-8	HEX. LOCK NUT M5-8	110
092	265075-8	+ PAN HEAD SCREW M5	150
A01	192219-6	SAFETY GOGGLE	690
A02	410047-0	WRENCH HOLDER 5.6	100
A03	783203-8	HEX. WRENCH 5	100
A04	B-04628	CERMET SAW BLADE 185X20X36T	3,840
A05	B-80379	CARBON BRUSH SET CB-303A	190

SERVICE DRAWING

MODEL NO. 4140

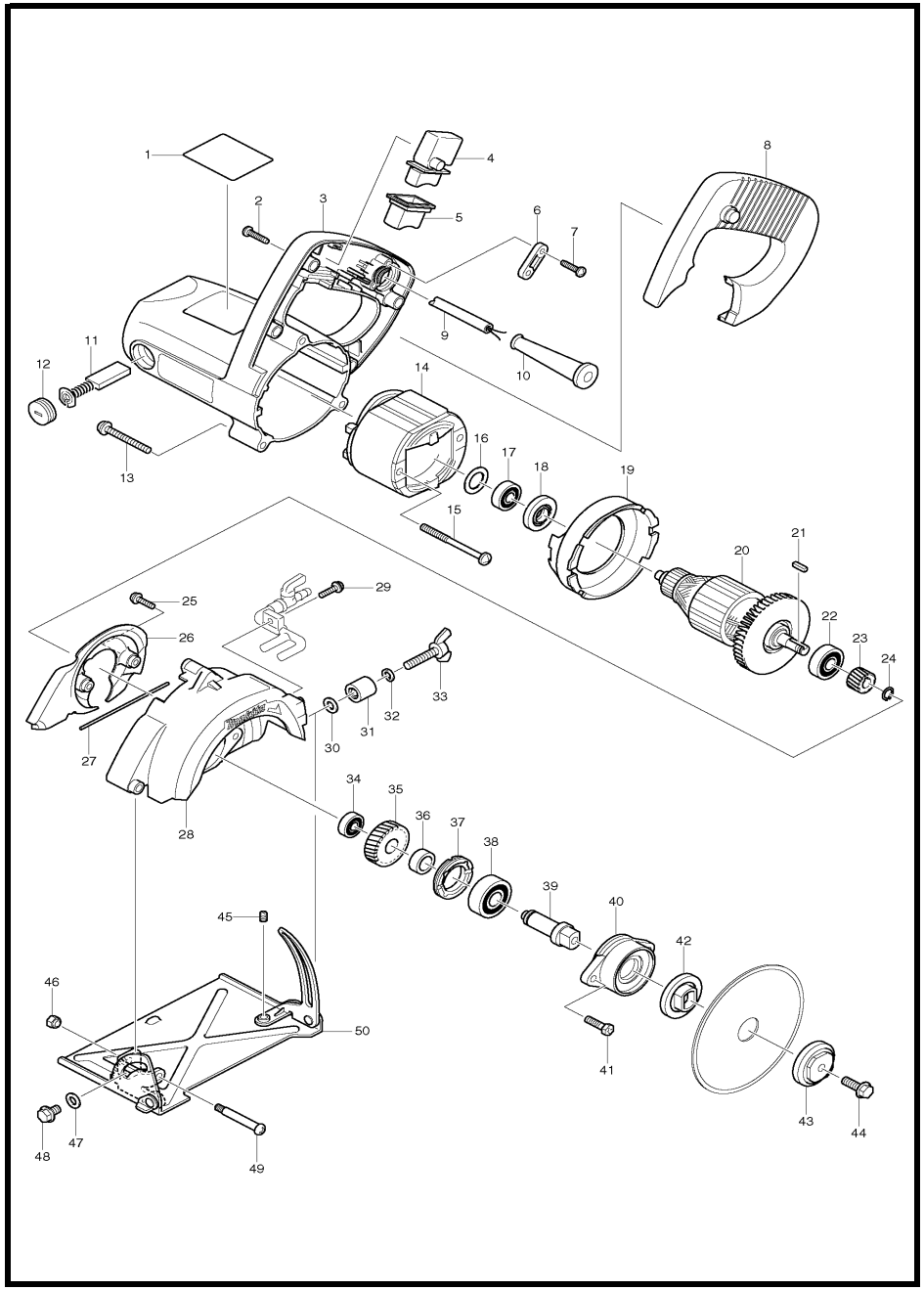

MODEL 4140

ITEM	PARTS ID	DESCRIPTION	PRICE/BAHT
001	859955-4	NAME PLATE 4140	80
002	265995-6	TAPPING SCREW 4X18	40
003	151602-6	MOTOR HOUSING COMPLETE	1,690
004	651281-5	SWITCH SGEL115CDY-5	390
005	421812-2	DUST COVER	100
006	687053-2	STRAIN RELIEF	70
007	265995-6	TAPPING SCREW 4X18	40
008	151600-0	HANDLE COVER COMPLETE	550
009	691015-4	POWER SUPPLY CORD 0.75-2-2.5	740
010	682504-0	CORD GUARD 10-85	190
011	B-80379	CARBON BRUSH SET CB-303A	190
012	643750-0	BRUSH HOLDER CAP	70
013	911263-2	PAN HEAD SCREW M5X40	60
014	594323-1	FIELD ASS'Y 220-240V	
015	266044-2	TAPPING SCREW 5X60	130
016	253192-6	FLAT WASHER 14	70
017	211033-2	BALL BEARING 608LB	200
018	681644-1	INSULATION WASHER	60
019	416721-8	BAFFLE PLATE	150
020	516363-9	ARMATURE ASS'Y 220-240V	
021	254236-5	KEY 3	90
022	210042-8	BALL BEARING 629LLB	250
023	226510-1	HELICAL GEAR 19	590
024	961004-6	RETAINING RING S-8	20
025	911123-8	PAN HEAD SCREW M4X14	30
026	416722-6	COVER	150
027	423155-8	SEAL RUBBER	80
028	151599-9	BLADE CASE COMPLETE	2,130
029	911123-8	PAN HEAD SCREW M4X14	30
030	941151-9	FLAT WASHER 6	30
031	262539-3	SLEEVE 6	100
032	942151-2	SPRING WASHER 6	100
033	924341-9	WING BOLT M6X28	150
034	211023-5	BALL BEARING 607LB	320
035	226511-9	HELICAL GEAR 41	680
036	257012-6	RING 12	100
037	285819-0	BEARING RETAINER 22-33	170
038	211137-0	BALL BEARING 6201LLU	380
039	323823-2	SPINDLE	940
040	152836-4	BEARING BOX COMPLETE	680
041	925231-9	+ HEX. BOLT M5X20	50
042	224080-4	INNER FLANGE 36	340
043	224081-2	OUTER FLANGE 36	240
044	265226-3	HEX. FLANGE HEAD BOLT M6X17	110
045	266229-0	H.S.SET SCREW(CUP POINT)M5X8	80
046	252103-8	HEX. LOCK NUT M5-8	110
047	941151-9	FLAT WASHER 6	30
048	265464-7	HEX.FLANGE HEAD BOLT M6X8	80
049	265056-2	+ PAN HEAD SCREW M5	170
050	163408-0	BASE	1,410
051	213489-5	O RING 34	50
A01	153555-5	WATER SUPPLY PIPE COMPLETE	830
A02	412010-9	VINYL TUBE 5X7X5000	270
A03	421835-0	WATER SUPPLY PLUG	230
A04	781011-1	WRENCH 22	230
A05	782209-3	SOCKET WRENCH 9	220

SERVICE DRAWING

MODEL NO. 4300BA

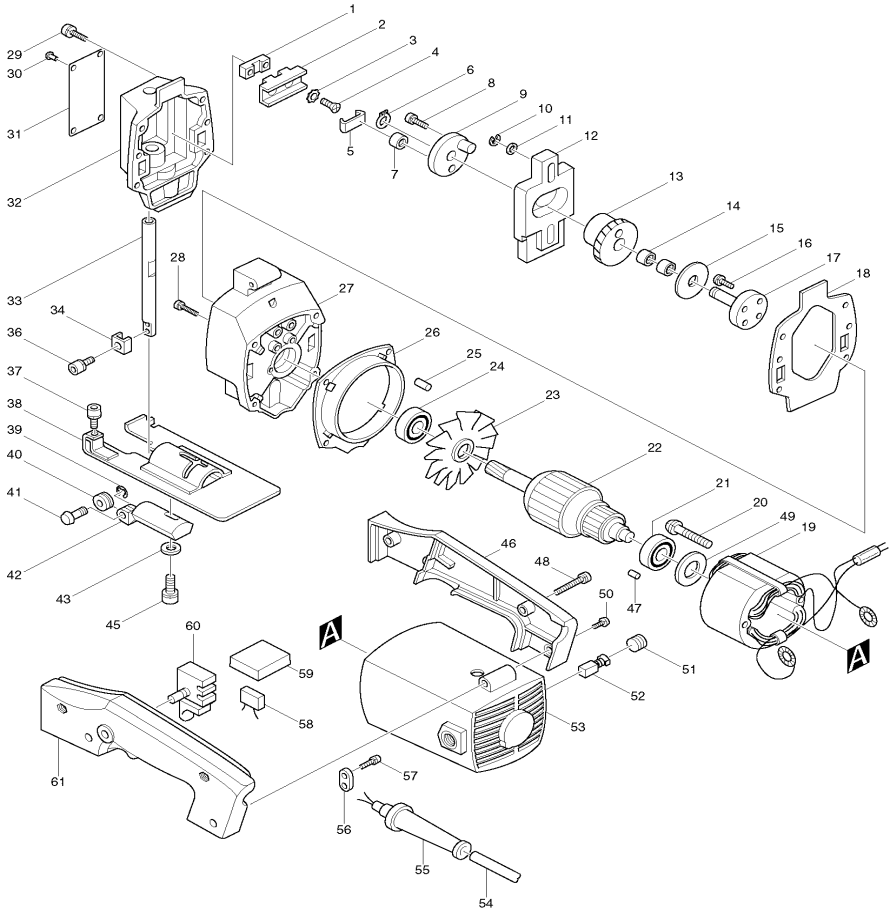

MODEL 4300BA

ITEM	PARTS ID	DESCRIPTION	PRICE/BAHT
001	335018-5	SLIDER SUPPORT	230
002	334018-2	SLIDER	530
003	943052-7	TOOTHED LOCK WASHER 4	20
004	251387-5	+ COUNTERSUNK HEAD SCREW M4	80
005	342483-1	SLIDER PLATE	80
006	961004-6	RETAINING RING S-8	20
007	212049-0	NEEDLE BEARING 607	620
008	911221-8	PAN HEAD SCREW M5X16	30
009	163021-4	CRANK	820
010	961018-5	STOP RING E-5	50
011	253077-6	FLAT WASHER 6	30
012	313014-3	BALANCE PLATE	800
013	221160-7	HELICAL GEAR 51	1,610
014	212005-0	NEEDLE BEARING 810	240
015	253076-8	FLAT WASHER 8	80
016	911116-5	PAN HEAD SCREW M4X12	20
017	323221-0	GEAR SHAFT	890
018	442082-0	PACKING	100
019	522015-2	FIELD ASS'Y 220V	
020	911666-0	PAN HEAD SCREW M5X45	80
021	211033-2	BALL BEARING 608LB	200
023	241518-4	FAN 68	360
024	211033-2	BALL BEARING 608LB	200
025	263002-9	RUBBER PIN 4	30
026	343087-2	BAFFLE PLATE	230
027	157406-4	GEAR HOUSING COMPLETE	2,370
028	911146-6	PAN HEAD SCREW M4X25	20
029	911138-5	PAN HEAD SCREW M4X20	50
030	953106-2	RIVET 0-5	20
031	851599-6	NAME PLATE 4300BA	150
032	157407-2	GEAR HOUSING COVER	1,640
033	325125-2	BLADE HOLDER	760
034	344979-8	BLADE SET	110
036	922111-0	HEX. SOCKET HEAD BOLT M4X10	60
037	922117-8	HEX. SOCKET HEAD BOLT M4X12	30
038	164491-0	BASE	730
039	257903-1	STOP RING E-2.3	20
040	322376-8	ROLLER	170
041	256644-6	PIN 3	80
042	154530-4	RETAINER COMPLETE	620
043	941051-3	FLAT WASHER 4	20
045	922136-4	HEX. SOCKET HEAD BOLT M4X20	120
046	181134-9	HANDLE SET	660
047	263014-2	RUBBER PIN 4	40
048	911153-9	PAN HEAD SCREW M4X28	30
049	253192-6	FLAT WASHER 14	70
050	911223-4	PAN HEAD SCREW M5X16	40
051	643550-8	BRUSH HOLDER CAP 5-8	100
052	B-80232	CARBON BRUSH SET CB-51A	
053	157819-9	MOTOR HOUSING	1,470
054	691015-4	POWER SUPPLY CORD 0.75-2-2.5	740
055	682502-4	CORD GUARD 8-85	110
057	911133-5	PAN HEAD SCREW M4X18	50
060	651204-3	SWITCH SGEL115CDY	420
061	181134-9	HANDLE SET	660
062	681613-2	INSULATION WASHER	80
064	257903-1	STOP RING E-2.3	20
065	941051-3	FLAT WASHER 4	20
400	792006-9	JIG SAW BLADE SET	660
403	132276-260	BLADE CLAMP SET	640
404	922107-1	HEX. SOCKET HEAD BOLT M4X8	30
405	271601-3	KNOB 20	90
406	164112-4	CIRCULAR GUIDE	290
407	323223-6	CIRCULAR GUIDE PIN	100
408	164113-2	GUIDE RULE	270
409	410048-8	WRENCH HOLDER 3.4	50
410	783201-2	HEX. WRENCH 3	50

SERVICE DRAWING

MODEL NO. 4300BV

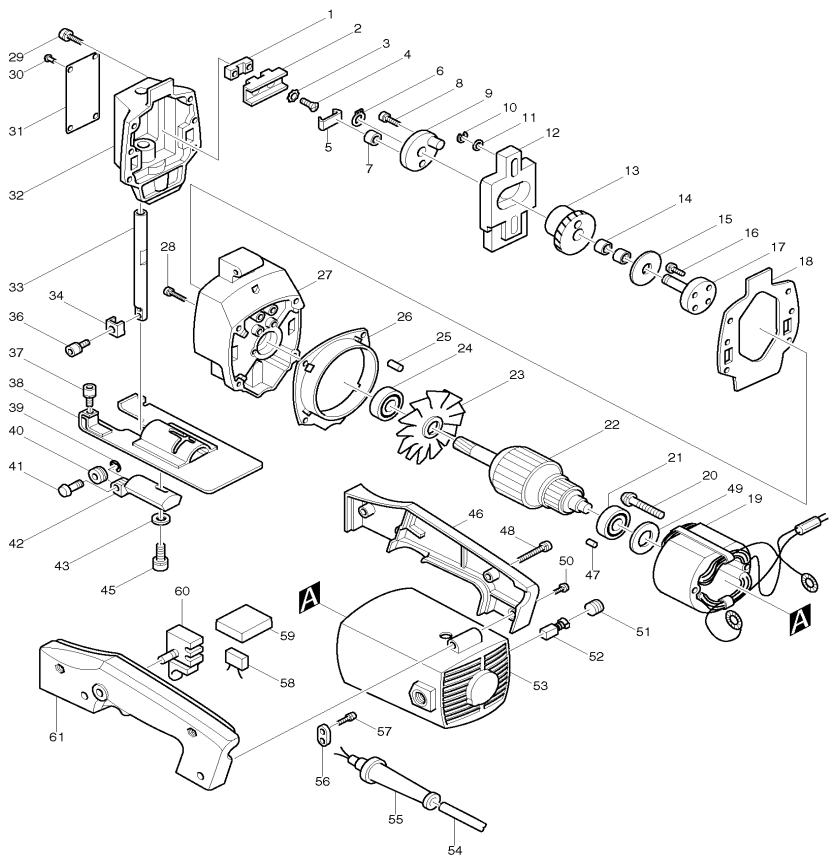

MODEL 4300BV

ITEM	PARTS ID	DESCRIPTION	PRICE/BAHT
001	335018-5	SLIDER SUPPORT	230
002	334018-2	SLIDER	530
003	943052-7	TOOTHED LOCK WASHER 4	20
004	251387-5	+ COUNTERSUNK HEAD SCREW M4X12	80
005	342483-1	SLIDER PLATE	80
006	961004-6	RETAINING RING S-8	20
007	212049-0	NEEDLE BEARING 607	620
008	911221-8	PAN HEAD SCREW M5X16	30
009	163021-4	CRANK	820
010	961018-5	STOP RING E-5	50
011	253077-6	FLAT WASHER 6	30
012	313014-3	BALANCE PLATE	800
013	221160-7	HELICAL GEAR 51	1,610
014	212005-0	NEEDLE BEARING 810	240
015	253076-8	FLAT WASHER 8	80
016	911116-5	PAN HEAD SCREW M4X12	20
017	323221-0	GEAR SHAFT	890
018	442082-0	PACKING	100
019	522015-2	FIELD ASS'Y 220V	
020	911666-0	PAN HEAD SCREW M5X45	80
021	211033-2	BALL BEARING 608LB	200
023	241518-4	FAN 68	360
024	211033-2	BALL BEARING 608LB	200
025	263002-9	RUBBER PIN 4	30
026	343087-2	BAFFLE PLATE	230
027	157406-4	GEAR HOUSING COMPLETE	2,370
028	911146-6	PAN HEAD SCREW M4X25	20
029	911138-5	PAN HEAD SCREW M4X20	50
030	953106-2	RIVET 0-5	20
031	851601-5	NAME PLATE 4300BV	150
032	157407-2	GEAR HOUSING COVER	1,640
033	325125-2	BLADE HOLDER	760
034	344979-8	BLADE SET	110
036	922111-0	HEX. SOCKET HEAD BOLT M4X10	60
037	922117-8	HEX. SOCKET HEAD BOLT M4X12	30
038	164491-0	BASE	730
039	257903-1	STOP RING E-2.3	20
040	322376-8	ROLLER	170
041	256644-6	PIN 3	80
042	154530-4	RETAINER COMPLETE	620
043	941051-3	FLAT WASHER 4	20
045	922128-3	HEX. SOCKET HEAD BOLT M4X16	30
045	922136-4	HEX. SOCKET HEAD BOLT M4X20	120
047	263014-2	RUBBER PIN 4	40
048	911153-9	PAN HEAD SCREW M4X28	30
049	253192-6	FLAT WASHER 14	70
050	911223-4	PAN HEAD SCREW M5X16	40
051	643550-8	BRUSH HOLDER CAP 5-8	100
052	B-80232	CARBON BRUSH SET CB-51A	
053	157819-9	MOTOR HOUSING	1,470
054	691015-4	POWER SUPPLY CORD 0.75-2-2.5	740
055	682504-0	CORD GUARD 10-85	190
056	687001-1	STRAIN RELIEF	50
057	911133-5	PAN HEAD SCREW M4X18	50
060	651256-4	SWITCH SGEL106CV-1A	1,790
061	181150-1	HANDLE SET	660
062	681613-2	INSULATION WASHER	80
064	257903-1	STOP RING E-2.3	20
065	941051-3	FLAT WASHER 4	20
400	792006-9	JIG SAW BLADE SET	660
403	132276-260	BLADE CLAMP SET	640
404	922107-1	HEX. SOCKET HEAD BOLT M4X8	30
405	271601-3	KNOB 20	90
406	164112-4	CIRCULAR GUIDE	290
407	323223-6	CIRCULAR GUIDE PIN	100
408	164113-2	GUIDE RULE	270
409	410048-8	WRENCH HOLDER 3.4	50
410	783201-2	HEX. WRENCH 3	50
411	194903-9	DUST COVER SET	320

SERVICE DRAWING

MODEL NO. 4323

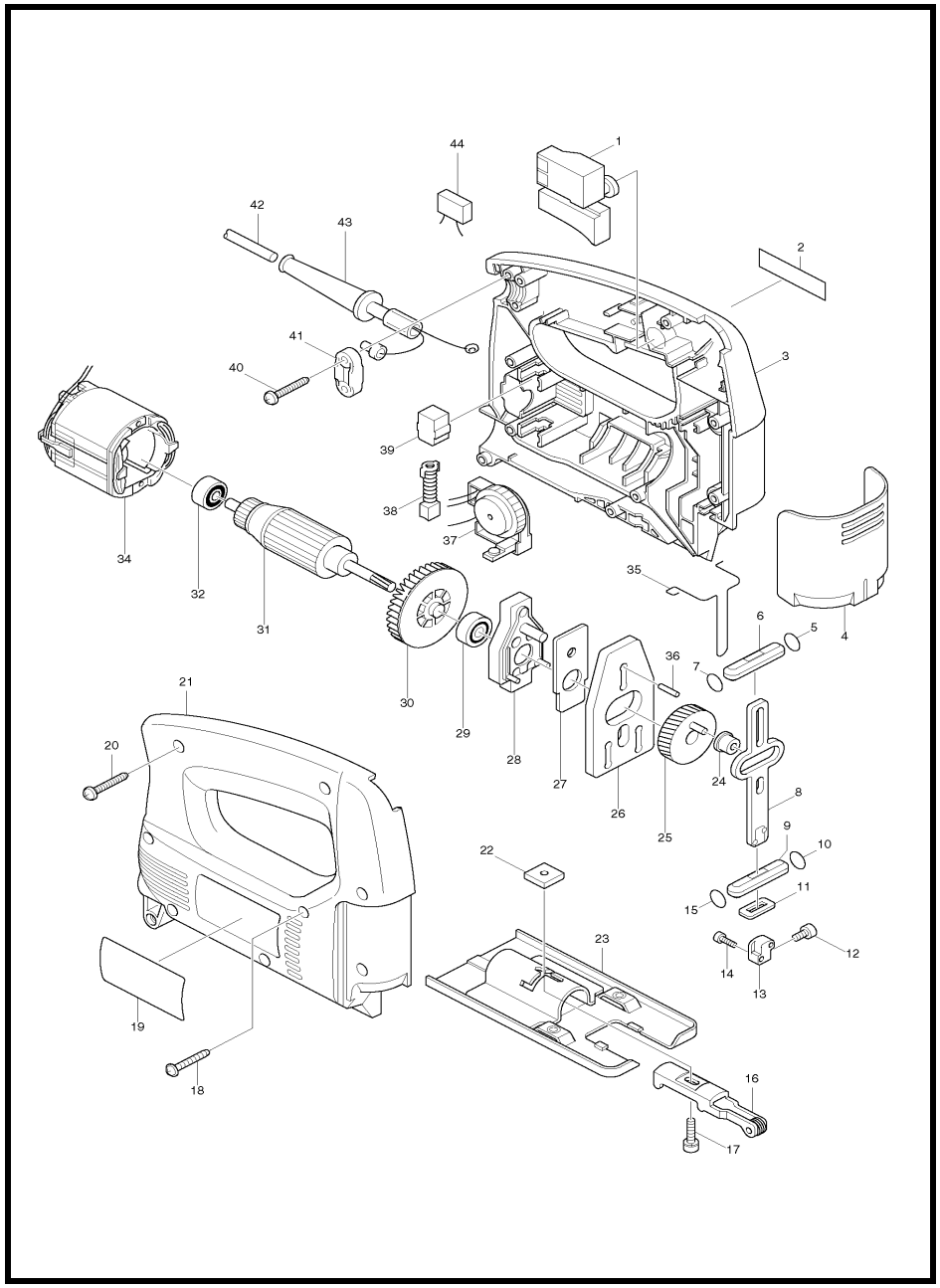

MODEL 4323

ITEM	PARTS ID	DESCRIPTION	PRICE/BAHT
001	651286-5	SWITCH SGEL206C-5	550
002	819063-3	MAKITA LABEL	30
003	183030-7	HOUSING SET	1,560
004	416476-5	DUST COVER	160
005	213038-8	O RING 5	20
006	313082-6	SLIDER GUIDE	130
007	213038-8	O RING 5	20
008	344613-0	SLIDER	410
009	313082-6	SLIDER GUIDE	130
010	213038-8	O RING 5	20
011	423307-1	POLY URETANE SPONGE SEAL	60
012	922107-1	HEX. SOCKET HEAD BOLT M4X8	30
013	313083-4	BLADE CLAMP	450
014	266177-3	HEX. SOCKET HEAD BOLT M3X10	30
015	213038-8	O RING 5	20
016	152578-0	RETAINER COMPLETE	290
017	922128-3	HEX. SOCKET HEAD BOLT M4X16	30
018	266053-1	TAPPING SCREW 4X35	40
020	265995-6	TAPPING SCREW 4X18	40
021	183030-7	HOUSING SET	1,560
022	343540-8	HOLDER	120
023	163397-9	BASE	400
024	257683-9	COLLAR SLEEVE	110
025	153254-9	GEAR COMPLETE	660
026	344614-8	BALANCE PLATE	360
027	344615-6	THRUST PLATE	80
028	152577-2	BEARING CASE COMPLETE	550
029	210005-4	BALL BEARING 608DDW	240
030	241881-5	FAN 52	190
031	517268-6	ARMATURE ASS'Y 220V	
031	515718-5	ARMATURE ASS'Y 220V	
032	210025-8	BALL BEARING 627LLB	250
034	633408-9	FIELD 220/240V	
035	323748-0	SAFETY WIRE	120
036	256254-9	PIN 3	30
037	631267-5	CONTROLLER 220-240V	1,500
038	B-80254	CARBON BRUSH SET CB-64A	
039	643552-4	BRUSH HOLDER 5-8	100
040	265995-6	TAPPING SCREW 4X18	40
041	687052-4	STRAIN RELIEF	80
042	691055-2	POWER SUPPLY CORD 0.75-2-2.0	1,100
043	682502-4	CORD GUARD 8-85	110
A01	A-85628	JIGSAW BLADE NO.B10	520
A02	783201-2	HEX. WRENCH 3	50

SERVICE DRAWING

MODEL NO. 4324

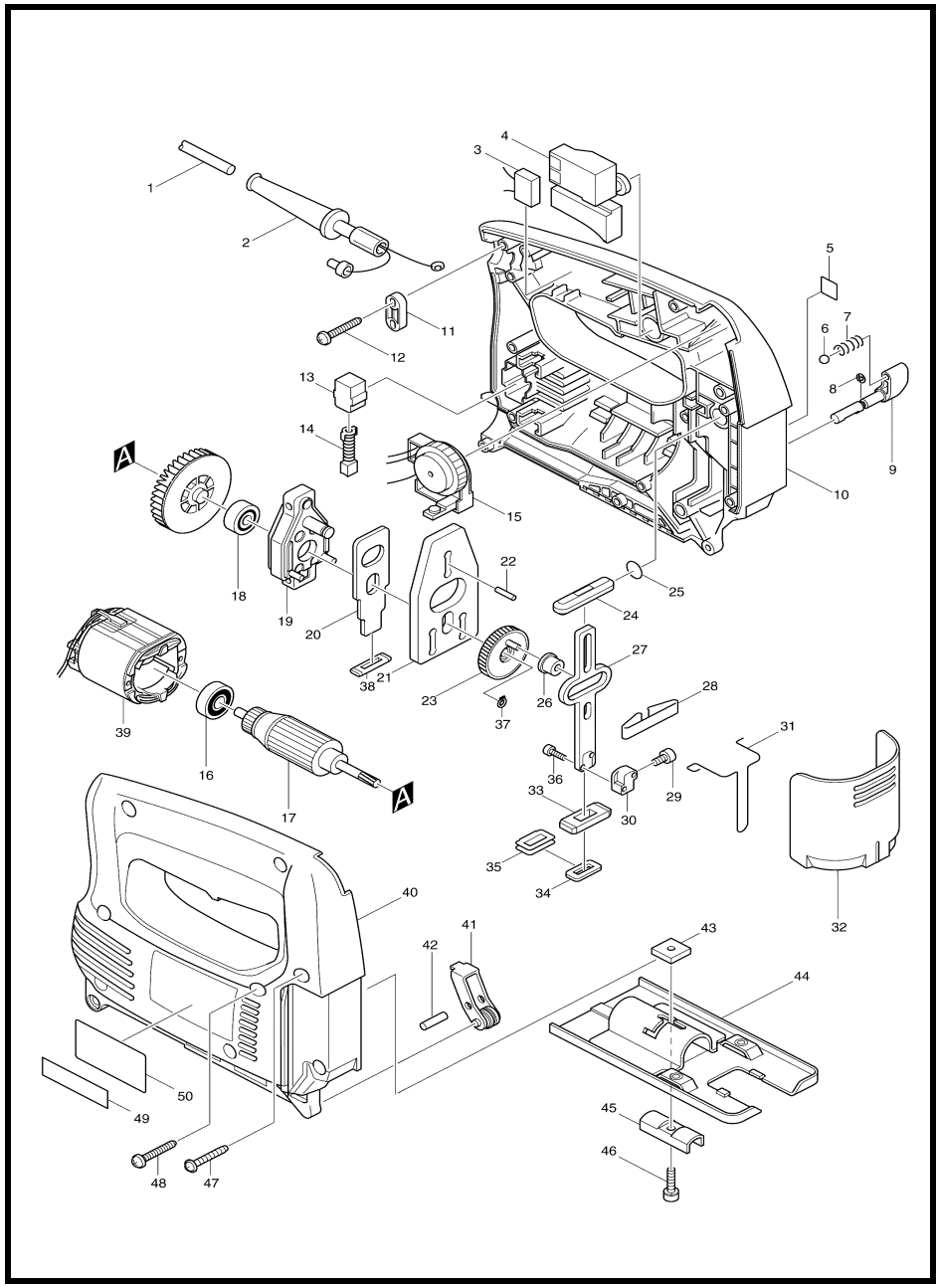

MODEL 4324

ITEM	PARTS ID	DESCRIPTION	PRICE/BAHT
001	691055-2	POWER SUPPLY CORD 0.75-2-2.0	1,100
002	682502-4	CORD GUARD 8-85	110
004	651286-5	SWITCH SGEL206C-5	550
005	816343-8	INDICATION LABEL	50
006	216008-6	STEEL BALL 4	20
007	233151-6	COMPRESSION SPRING 4	80
008	961011-9	STOP RING E-4	20
009	272239-7	LEVER 18	310
010	183051-9	HOUSING SET	2,110
011	687052-4	STRAIN RELIEF	80
012	265995-6	TAPPING SCREW 4X18	40
013	643552-4	BRUSH HOLDER 5-8	100
014	B-80254	CARBON BRUSH SET CB-64A	
015	631267-5	CONTROLLER 220-240V	1,500
016	210025-8	BALL BEARING 627LLB	250
017	515718-5	ARMATURE ASS'Y 220V	
018	210005-4	BALL BEARING 608DDW	240
019	152600-3	BEARING CASE COMPLETE	590
020	344683-9	PUSH PLATE	190
021	344614-8	BALANCE PLATE	360
022	256254-9	PIN 3	30
023	153260-4	GEAR COMPLETE	960
024	313082-6	SLIDER GUIDE	130
025	213038-8	O RING 5	20
026	257683-9	COLLAR SLEEVE	110
027	344613-0	SLIDER	410
028	232183-0	LEAF SPRING	110
029	922107-1	HEX. SOCKET HEAD BOLT M4X8	30
030	313083-4	BLADE CLAMP	450
031	323748-0	SAFETY WIRE	120
032	416476-5	DUST COVER	160
033	313086-8	SLIDER SUPPORT	80
034	423307-1	POLY URETANE SPONGE SEAL	60
035	344686-3	SEAL PLATE	80
036	266177-3	HEX. SOCKET HEAD BOLT M3X10	30
037	961002-0	RETAINING RING S-6	20
038	416703-0	DUST SEAL	90
039	633408-9	FIELD 220/240V	
040	183051-9	HOUSING SET	2,110
041	152601-1	RETAINER COMPLETE	340
042	256117-9	PIN 4	70
043	343540-8	HOLDER	120
044	163397-9	BASE	400
045	344685-5	CLAMP COMPLETE	90
046	922128-3	HEX. SOCKET HEAD BOLT M4X16	30
047	265995-6	TAPPING SCREW 4X18	40
048	266053-1	TAPPING SCREW 4X35	40
051	241881-5	FAN 52	190
A01	A-85628	JIGSAW BLADE NO.B10	520
A02	783201-2	HEX. WRENCH 3	50

SERVICE DRAWING

MODEL NO. 4327

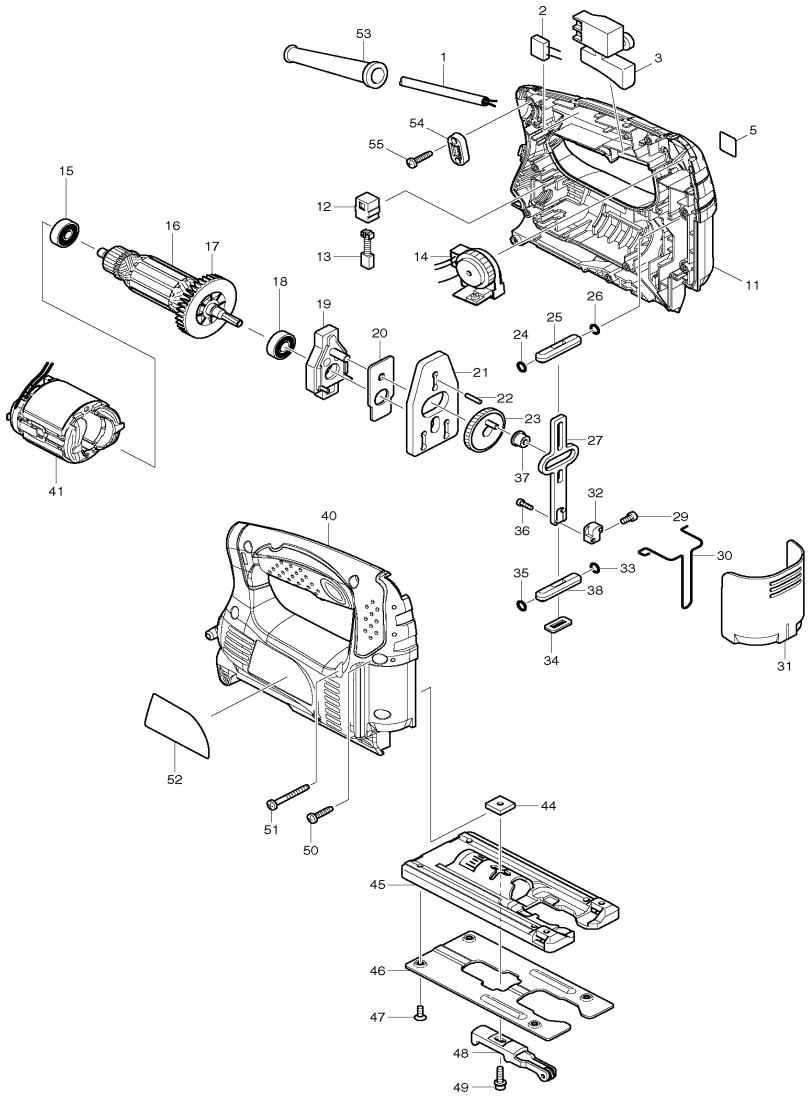

MODEL 4327

ITEM	PARTS ID	DESCRIPTION	PRICE/BAHT
001	691055-2	POWER SUPPLY CORD 0.75-2-2.0	1,100
003	651286-5	SWITCH SGEL206C-5	550
011	188342-3	HOUSING SET	1,370
012	643552-4	BRUSH HOLDER 5-8	100
013	B-80254	CARBON BRUSH SET CB-64A	
014	631777-2	CONTROLLER	1,190
014	620411-9	CONTROLLER	970
015	210025-8	BALL BEARING 627LLB	250
016	515718-5	ARMATURE ASS'Y 220V	
017	241881-5	FAN 52	190
018	210005-4	BALL BEARING 608DDW	240
019	152577-2	BEARING CASE COMPLETE	550
020	344615-6	THRUST PLATE	80
021	344614-8	BALANCE PLATE	360
022	256254-9	PIN 3	30
023	153254-9	GEAR COMPLETE	660
024	213038-8	O RING 5	20
025	313082-6	SLIDER GUIDE	130
026	213038-8	O RING 5	20
027	344613-0	SLIDER	410
029	922107-1	HEX. SOCKET HEAD BOLT M4X8	30
030	323748-0	SAFETY WIRE	120
031	416476-5	DUST COVER	160
032	313140-8	BLADE CLAMP	260
033	213038-8	O RING 5	20
034	423307-1	POLY URETANE SPONGE SEAL	60
035	213038-8	O RING 5	20
036	266177-3	HEX. SOCKET HEAD BOLT M3X10	30
037	257683-9	COLLAR SLEEVE	110
038	313082-6	SLIDER GUIDE	130
040	188342-3	HOUSING SET	1,370
044	343540-8	HOLDER	120
045	163397-9	BASE	400
048	158393-0	RETAINER COMPLETE	190
050	265995-6	TAPPING SCREW 4X18	40
051	266053-1	TAPPING SCREW 4X35	40
052	863950-8	4327 NAME PLATE	80
053	682569-2	CORD GUARD 8-85	110
054	687124-5	STRAIN RELIEF	70
055	265995-6	TAPPING SCREW 4X18	40
A01	A-85628	JIGSAW BLADE NO.B10	520
A02	783201-2	HEX. WRENCH 3	50

SERVICE DRAWING

MODEL NO. 4329

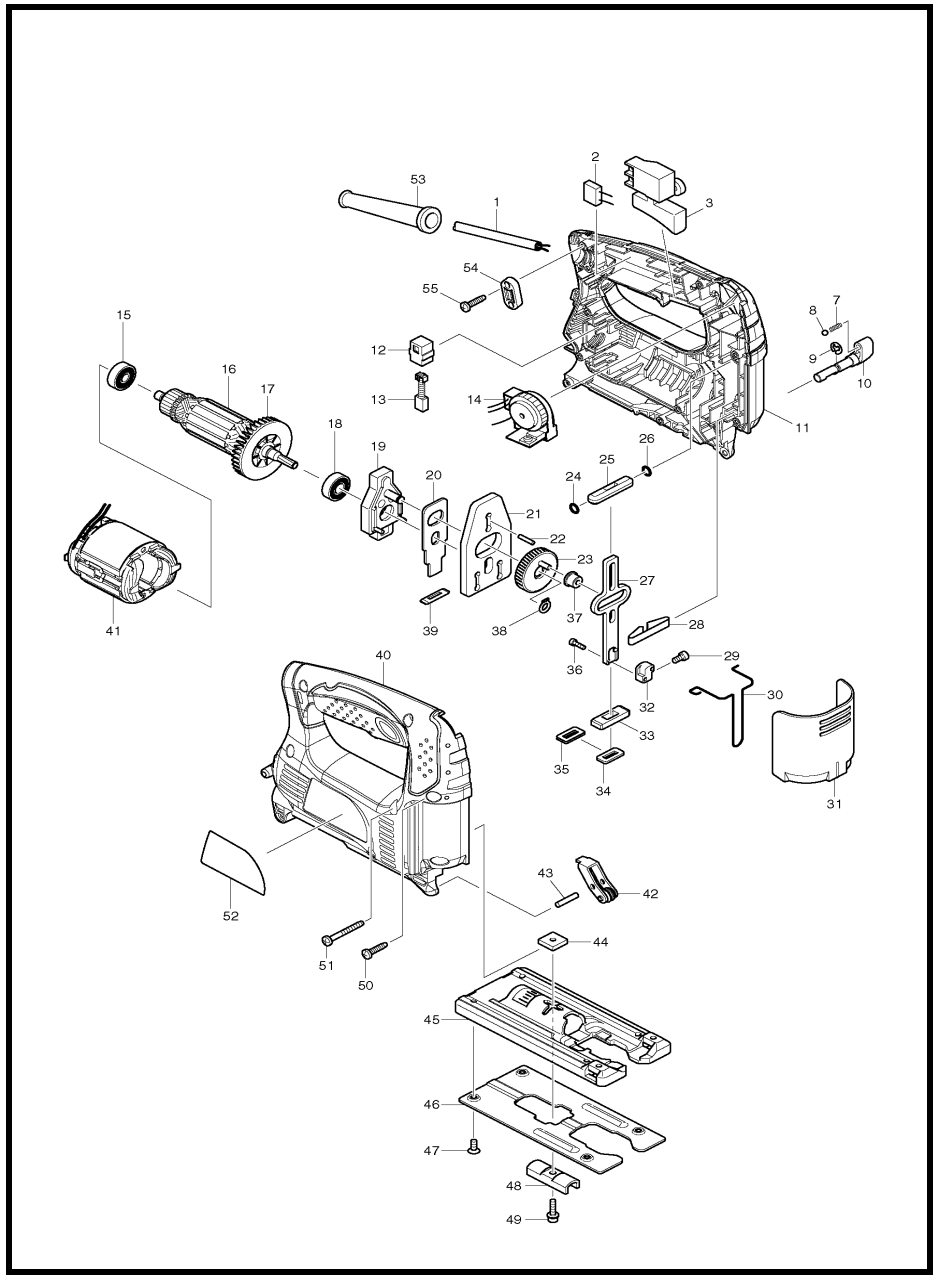

MODEL 4329

ITEM	PARTS ID	DESCRIPTION	PRICE/BAHT
001	691055-2	POWER SUPPLY CORD 0.75-2-2.0	1,100
003	651286-5	SWITCH SGEL206C-5	550
007	233151-6	COMPRESSION SPRING 4	80
008	216008-6	STEEL BALL 4	20
009	961011-9	STOP RING E-4	20
010	272239-7	LEVER 18	310
011	188338-4	HOUSING SET	1,280
012	643552-4	BRUSH HOLDER 5-8	100
013	B-80254	CARBON BRUSH SET CB-64A	
014	631777-2	CONTROLLER	1,190
014	620411-9	CONTROLLER	970
015	210025-8	BALL BEARING 627LLB	250
016	515718-5	ARMATURE ASS'Y 220V	
017	241881-5	FAN 52	190
018	210005-4	BALL BEARING 608DDW	240
019	152600-3	BEARING CASE COMPLETE	590
020	344683-9	PUSH PLATE	190
021	344614-8	BALANCE PLATE	360
022	256254-9	PIN 3	30
023	153260-4	GEAR COMPLETE	960
024	213038-8	O RING 5	20
025	313082-6	SLIDER GUIDE	130
026	213038-8	O RING 5	20
027	344613-0	SLIDER	410
028	232183-0	LEAF SPRING	110
029	922107-1	HEX. SOCKET HEAD BOLT M4X8	30
030	323748-0	SAFETY WIRE	120
031	416476-5	DUST COVER	160
032	313140-8	BLADE CLAMP	260
033	313086-8	SLIDER SUPPORT	80
034	423307-1	POLY URETANE SPONGE SEAL	60
035	344686-3	SEAL PLATE	80
036	266177-3	HEX. SOCKET HEAD BOLT M3X10	30
037	257683-9	COLLAR SLEEVE	110
038	961002-0	RETAINING RING S-6	20
039	416703-0	DUST SEAL	90
040	188338-4	HOUSING SET	1,280
041	633658-6	FIELD 220-240V	
042	158392-2	RETAINER COMPLETE	200
043	256117-9	PIN 4	70
044	343540-8	HOLDER	120
045	317796-9	BASE	440
046	345441-6	BASE PLATE	180
047	912107-9	COUNTERSUNK HEAD SCREW M4X8	30
048	344685-5	CLAMP COMPLETE	90
049	922128-3	HEX. SOCKET HEAD BOLT M4X16	30
050	265995-6	TAPPING SCREW 4X18	40
051	266053-1	TAPPING SCREW 4X35	40
052	863970-2	4329 NAME PLATE	80
053	682569-2	CORD GUARD 8-85	110
054	687124-5	STRAIN RELIEF	70
055	265995-6	TAPPING SCREW 4X18	40

ITEM	PARTS ID	DESCRIPTION	PRICE/BAHT
A02	783201-2	HEX. WRENCH 3	50

SERVICE DRAWING

MODEL NO. 4340CT

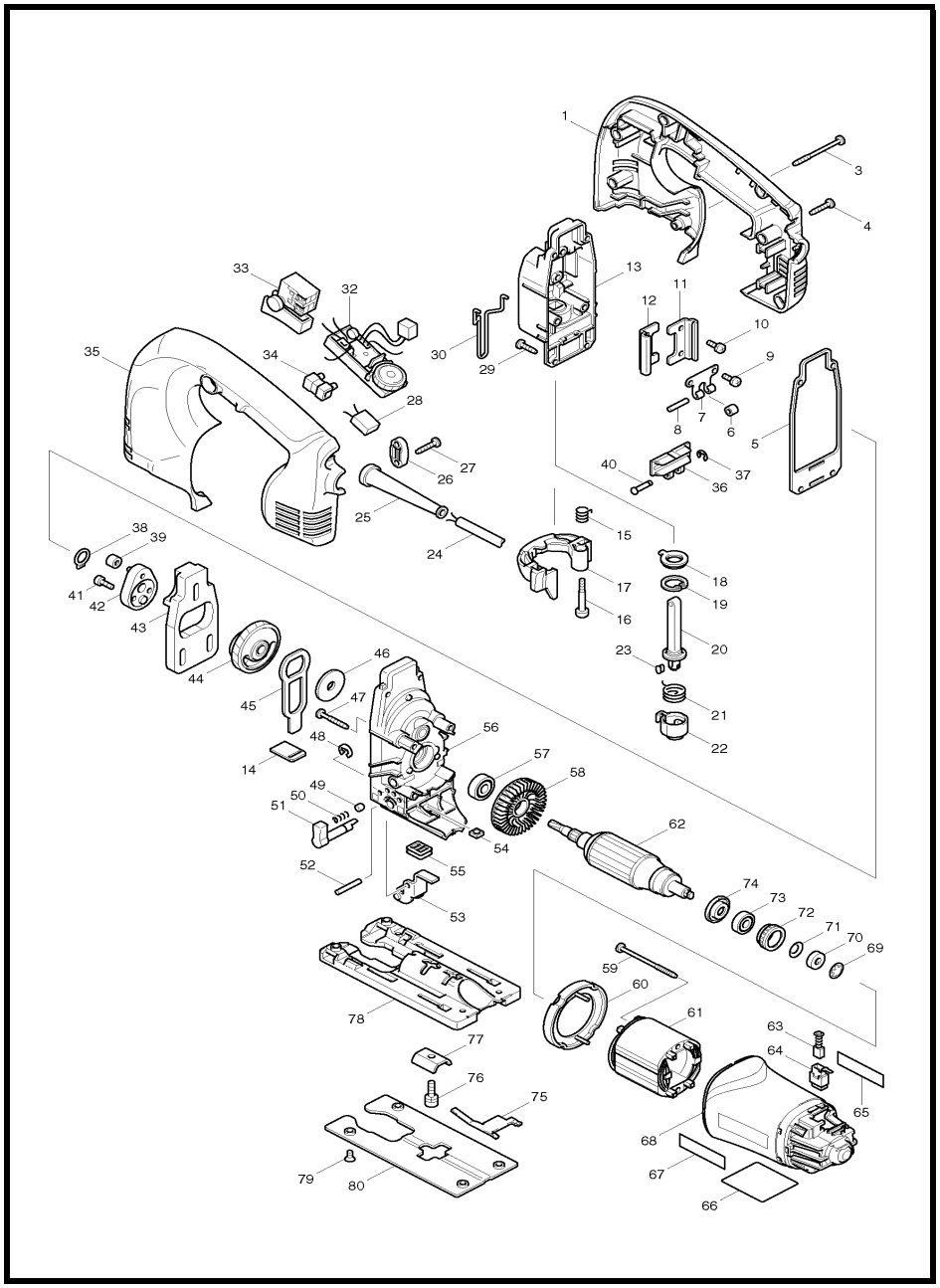

MODEL 4340CT

ITEM	PARTS ID	DESCRIPTION	PRICE/BAHT
001	183423-8	HANDLE SET	970
003	266091-3	TAPPING SCREW 4X50	40
004	265995-6	TAPPING SCREW 4X18	40
005	442138-9	PACKING	100
006	214031-5	PLANE BEARING 4	80
007	232207-2	LEAF SPRING	100
008	256117-9	PIN 4	70
009	911111-5	PAN HEAD SCREW M4X10	30
010	911111-5	PAN HEAD SCREW M4X10	30
011	345240-6	LINEAR GUIDE	140
012	345240-6	LINEAR GUIDE	140
013	153338-3	GEAR HOUSING COVER COMPLETE	2,010
014	417839-8	SEAL PLATE	70
015	231659-4	TORSION SPRING 6	150
016	265026-1	+ PAN HEAD SCREW M4	170
017	417842-9	TOOL OPENER	190
018	421817-2	DUST COVER	80
019	962068-3	RETAINING RING R-18	80
020	135060-4	ROD ASS'Y	2,260
021	231660-9	TORSION SPRING 15	100
022	310136-0	BLADE HOLDER	480
023	310135-2	PUSH PIN	270
024	666066-6	POWER SUPPLY CORD 1.0-2-2.5	650
025	682559-5	CORD GUARD 8	110
026	687063-9	CORD CLAMP	50
027	265995-6	TAPPING SCREW 4X18	40
028	645147-9	NOISE SUPPRESSOR	210
029	266034-5	TAPPING SCREW CT 4X16	50
030	324233-6	SAFETY WIRE	150
032	631768-3	CONTROLLER	1,900
033	650202-4	SWITCH SGEL115CDY-8	830
035	183423-8	HANDLE SET	970
036	310134-4	SLIDER	600
037	961017-7	STOP RING E-3	20
038	961004-6	RETAINING RING S-8	20
039	212014-9	NEEDLE BEARING 407	810
040	268090-1	PIN 4	150
041	265353-6	HEX. SOCKET HEAD BOLT M4X12	100
042	153336-7	CRANK COMPLETE	530
043	313108-4	BALANCE PLATE	610
044	153335-9	GEAR COMPLETE	1,200
045	345235-9	PUSH PLATE	310
046	253877-4	FLAT WASHER 8	80
047	266050-7	TAPPING SCREW 4X30	60
048	961018-5	STOP RING E-5	50
049	286032-3	CAP 5	80
050	233139-6	COMPRESSION SPRING 3	80
051	272244-4	LEVER 17	480
052	268063-4	PIN 4	80
053	153334-1	RETAINER COMPLETE	710
054	252171-1	SQUARE NUT M5-8	50
055	421816-4	DUST SEAL	80
057	210005-4	BALL BEARING 608DDW	240
059	266052-3	TAPPING SCREW 4X60	100
060	417838-0	BAFFLE PLATE	70
061	593508-6	FIELD ASS'Y 220-240V	
064	643936-6	BRUSH HOLDER	230
065	819063-3	MAKITA LABEL	30
066	853851-8	NAME PLATE 4340CT	100
067	819063-3	MAKITA LABEL	30
068	183435-1	MOTOR HOUSING	820
069	259039-2	SELF LOCK 6	20
070	688117-5	MAGNET SLEEVE	230
071	267756-0	WAVE WASHER 6	30
072	421494-0	RUBBER RING 19	250
073	211021-9	BALL BEARING 607LLB	240
074	681636-0	INSULATION WASHER	60
075	232208-0	LEAF SPRING	100
076	922226-3	HEX. SOCKET HEAD BOLT M5X18	80
077	345237-5	CRANK PLATE	130
078	317565-8	BASE	560
079	912107-9	COUNTERSUNK HEAD SCREW M4X8	30
080	345238-3	BASE PLATE	380
A01	415524-7	ANTI-SPLINTERING DEVICE	100
A02	417852-6	COVER PLATE	320
A04	783202-0	HEX. WRENCH 4	70
A05	183475-9	PLASTIC CARRYING CASE	
C10	214041-2	BUSH	140

SERVICE DRAWING

MODEL NO. 4350CT

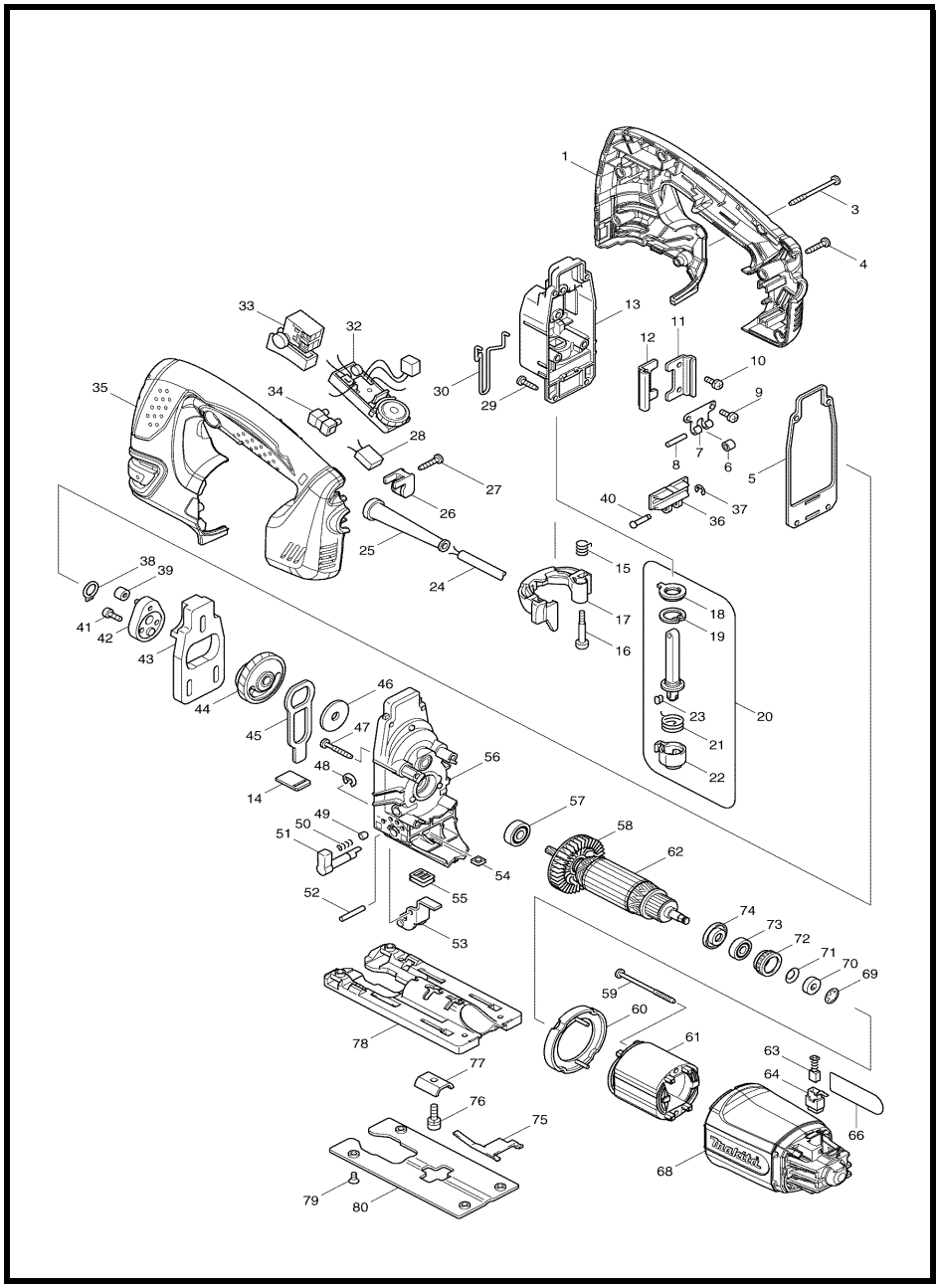

MODEL 4350CT

ITEM	PARTS ID	DESCRIPTION	PRICE/BAHT
001	188286-7	HANDLE SET	1,060
002	265995-6	TAPPING SCREW 4X18	40
003	266091-3	TAPPING SCREW 4X50	40
004	265995-6	TAPPING SCREW 4X18	40
005	442138-9	PACKING	100
006	214031-5	PLANE BEARING 4	80
007	232207-2	LEAF SPRING	100
008	256117-9	PIN 4	70
009	911111-5	PAN HEAD SCREW M4X10	30
010	911111-5	PAN HEAD SCREW M4X10	30
011	345240-6	LINEAR GUIDE	140
012	345240-6	LINEAR GUIDE	140
013	153338-3	GEAR HOUSING COVER COMPLETE	2,010
014	417839-8	SEAL PLATE	70
015	231659-4	TORSION SPRING 6	150
016	265026-1	+ PAN HEAD SCREW M4	170
017	419820-5	TOOL OPENER	400
018	421817-2	DUST COVER	80
019	962068-3	RETAINING RING R-18	80
020	135060-4	ROD ASS'Y	2,260
021	231660-9	TORSION SPRING 15	100
022	310136-0	BLADE HOLDER	480
023	310135-2	PUSH PIN	270
024	666066-6	POWER SUPPLY CORD 1.0-2-2.5	650
025	682559-5	CORD GUARD 8	110
026	687260-7	STRAIN RELIEF	50
027	265995-6	TAPPING SCREW 4X18	40
029	266034-5	TAPPING SCREW CT 4X16	50
030	324233-6	SAFETY WIRE	150
032	631768-3	CONTROLLER	1,900
035	188286-7	HANDLE SET	1,060
036	310134-4	SLIDER	600
037	961017-7	STOP RING E-3	20
038	961004-6	RETAINING RING S-8	20
039	212014-9	NEEDLE BEARING 407	810
040	268090-1	PIN 4	150
041	265353-6	HEX. SOCKET HEAD BOLT M4X12	100
042	153336-7	CRANK COMPLETE	530
043	313108-4	BALANCE PLATE	610
044	153335-9	GEAR COMPLETE	1,200
045	345235-9	PUSH PLATE	310
046	253877-4	FLAT WASHER 8	80
047	266050-7	TAPPING SCREW 4X30	60
048	961018-5	STOP RING E-5	50
049	286032-3	CAP 5	80
050	233139-6	COMPRESSION SPRING 3	80
051	272244-4	LEVER 17	480
052	268063-4	PIN 4	80
053	153334-1	RETAINER COMPLETE	710
054	252171-1	SQUARE NUT M5-8	50
055	421816-4	DUST SEAL	80
056	153337-5	GEAR HOUSING COMPLETE	1,020
058	241881-5	FAN 52	190
059	266052-3	TAPPING SCREW 4X60	100
060	417838-0	BAFFLE PLATE	70
061	593508-6	FIELD ASS'Y 220-240V	
062	517398-3	ARMATURE ASS'Y 220-240V	
063	B-80422	CARBON BRUSH SET CB-419A	
064	643936-6	BRUSH HOLDER	230
066	863664-9	4350CT NAME PLATE	100
068	419886-5	MOTOR HOUSING	360
069	259039-2	SELF LOCK 6	20
070	688117-5	MAGNET SLEEVE	230
071	267756-0	WAVE WASHER 6	30
072	421494-0	RUBBER RING 19	250
073	211021-9	BALL BEARING 607LLB	240
074	681636-0	INSULATION WASHER	60
075	232208-0	LEAF SPRING	100
076	922226-3	HEX. SOCKET HEAD BOLT M5X18	80
077	345237-5	CRANK PLATE	130
078	317565-8	BASE	560
079	912107-9	COUNTERSUNK HEAD SCREW M4X8	30
080	345238-3	BASE PLATE	380
A01	415524-7	ANTI-SPLINTERING DEVICE	100
A02	417852-6	COVER PLATE	320
A03	A-85737	JIGSAW BLADE NO.B22	440
A06	783202-0	HEX. WRENCH 4	70

SERVICE DRAWING

MODEL NO. 5007NF

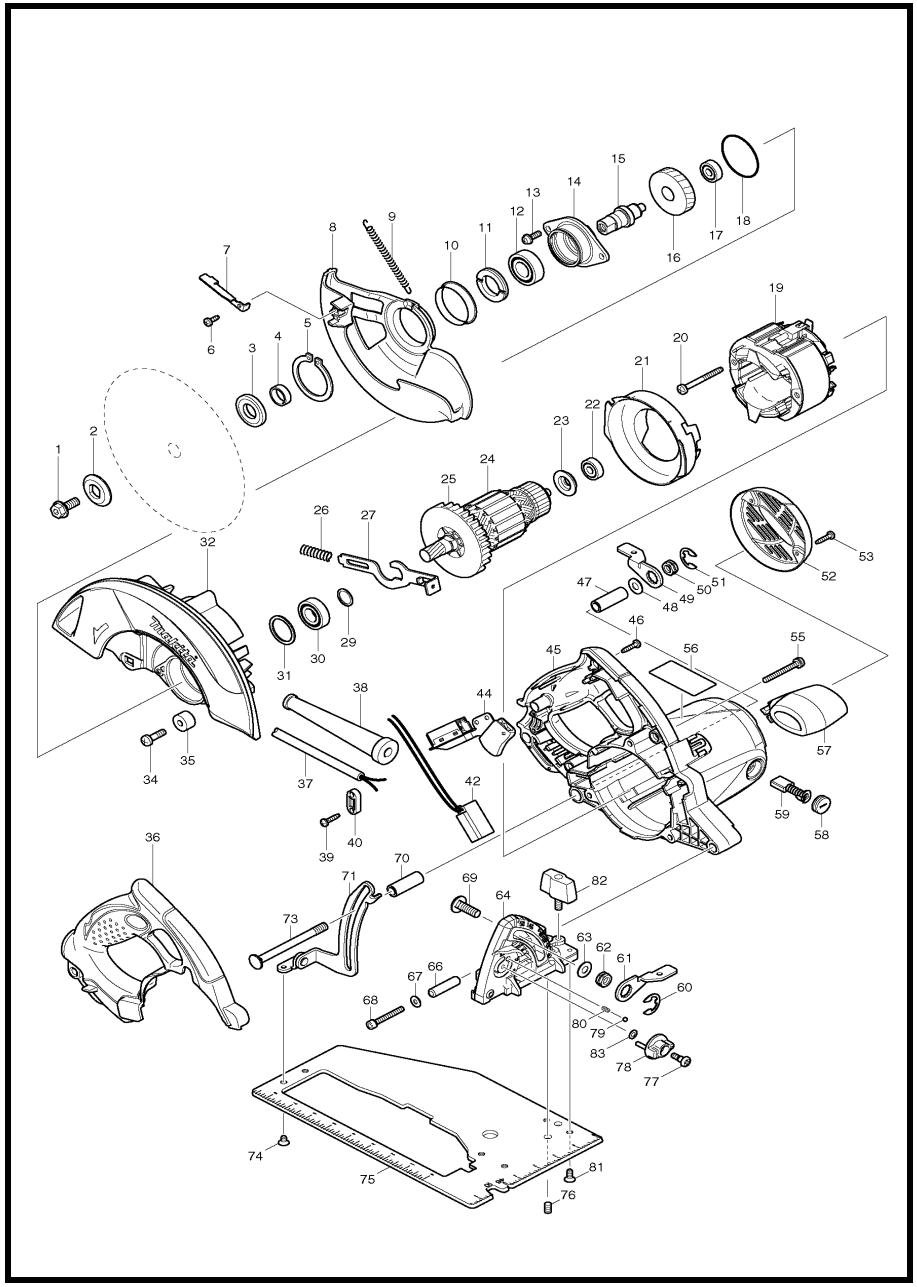

MODEL 5007NF

ITEM	PARTS ID	DESCRIPTION	PRICE/BAHT
001	266283-4	HEX. SOCKET HEX. BOLT M8X20	180
002	224409-4	OUTER FLANGE 35	180
003	224412-5	INNER FLANGE 35	150
004	257279-6	RING 17	70
005	961201-4	RETAINING RING S-42	100
006	266398-7	TAPPING SCREW BIND CT 4X12	30
007	345931-9	LEVER PLATE	100
008	318057-0	SAFETY COVER	470
008	318963-9	SAFETY COVER	620
009	231839-2	TENSION SPRING 4	80
010	345422-0	SPACER	100
011	285848-3	BEARING RETAINER 23-36	120
012	210301-0	BALL BEARING 6003DDW	600
013	911223-4	PAN HEAD SCREW M5X16	40
014	318056-2	BEARING BOX	210
015	324690-8	SPINDLE	260
016	226682-2	HELICAL GEAR 47	390
017	210029-0	BALL BEARING 608ZZ	130
018	213623-7	O RING 46	50
019	596288-3	FIELD ASS'Y 220V	
020	266397-9	TAPPING SCREW BIND 5X50	70
021	419548-5	BAFFLE PLATE	90
022	210029-0	BALL BEARING 608ZZ	130
022	210005-4	BALL BEARING 608DDW	240
023	681625-5	INSULATION WASHER	50
025	240003-4	FAN 80	260
026	231297-2	COMPRESSION SPRING 9	80
027	345717-1	SHAFT LOCK	100
029	267280-3	FLAT WASHER 15	40
030	211236-8	BALL BEARING 6002DDW	550
031	261132-0	URETHANE WASHER 26	70
032	158672-6	BLADE CASE COMPLETE	1,100
034	251247-1	+ PAN HEAD SCREW M6X20	50
035	262552-1	RUBBER SLEEVE 6	130
036	450684-8	HANDLE COVER	550
037	691015-4	POWER SUPPLY CORD 0.75-2-2.5	740
038	682564-2	CORD GUARD	150
039	266326-2	TAPPING SCREW 4X18	30
040	687140-7	STRAIN RELIEF	40
042	631709-9	LIGHT CIRCUIT	680
045	158705-7	MOTOR HOUSING COMPLETE	1,360
046	266326-2	TAPPING SCREW 4X18	30
047	331719-3	PIPE 9	80
048	941201-0	FLAT WASHER 8	110
049	345930-1	LEVER PLATE	100
050	252199-9	HEX. NUT M8-13	80
051	257953-6	BOW STOP RING E-12	50
052	345929-6	REAR COVER	160
053	266326-2	TAPPING SCREW 4X18	30
055	911268-2	PAN HEAD SCREW M5X45	100
057	450705-6	FRONT GRIP	170
058	643650-4	BRUSH HOLDER CAP 6.5-13.5	70
059	B-80329	CARBON BRUSH SET CB-153A	

ITEM	PARTS ID	DESCRIPTION	PRICE/BAHT
060	257953-6	BOW STOP RING E-12	50
061	346003-3	LEVER PLATE	100
062	264006-4	HEX. NUT M8-13	80
063	941201-0	FLAT WASHER 8	110
064	163527-2	ANGULAR PLATE COMPLETE	560
066	257759-2	SLEEVE 6	90
067	941101-4	FLAT WASHER 5	20
068	922261-1	HEX. SOCKET HEAD BOLT M5X40	80
069	266227-4	CAP SQUARE NECK BOLT M8X28	70
070	331719-3	PIPE 9	80
071	163484-4	DEPTH GUIDE COMPLETE	210
073	266237-1	CAP SQUARE NECK BOLT M8X90	200
074	265086-3	+ COUNTERSUNK HEAD SCREW M5X8	50
075	345925-4	BASE	870
076	266085-8	H.S.SET SCREW(FLAT POINT)M6X10	120
077	251370-2	+ PAN HEAD SCREW M5	80
078	450704-8	DIAL 27	100
079	216008-6	STEEL BALL 4	20
080	233314-4	COMPRESSION SPRING 4	100
081	912212-2	COUNTERSUNK HEAD SCREW M5X12	30
082	251858-2	SCREW M6X15	120
083	253811-4	FLAT WASHER 5	80
A01	164095-8	GUIDE RULE	240
A02	D-19037	T.C.T. SAW BLADE 185X80X24T	810
A03	783204-6	HEX. WRENCH 6	110

SERVICE DRAWING

MODEL NO. 5008MG

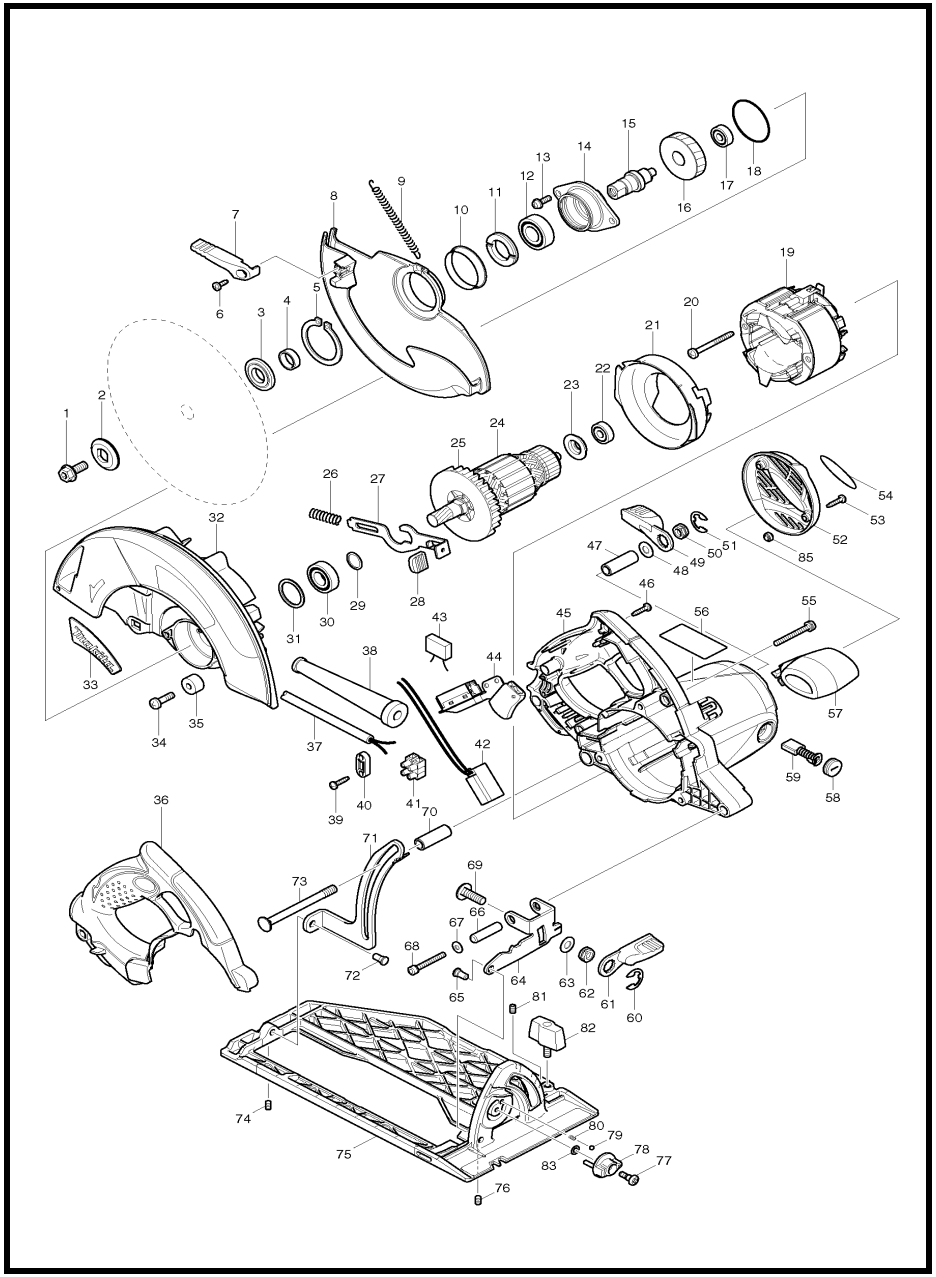

MODEL 5008MG

ITEM	PARTS ID	DESCRIPTION	PRICE/BAHT
001	266283-4	HEX. SOCKET HEX. BOLT M8X20	180
002	224409-4	OUTER FLANGE 35	180
003	224410-9	INNER FLANGE 35	150
004	257279-6	RING 17	70
005	961201-4	RETAINING RING S-42	100
006	266398-7	TAPPING SCREW BIND CT 4X12	30
007	272252-5	LEVER 65	120
008	318175-4	SAFETY COVER	1,220
009	231848-1	TENSION SPRING 4	160
010	345422-0	SPACER	100
011	285848-3	BEARING RETAINER 23-36	120
012	210301-0	BALL BEARING 6003DDW	600
013	911223-4	PAN HEAD SCREW M5X16	40
014	318056-2	BEARING BOX	210
015	324690-8	SPINDLE	260
016	226662-8	HELICAL GEAR 43	460
017	211031-6	BALL BEARING 608LLB	190
018	213623-7	O RING 46	50
020	266397-9	TAPPING SCREW BIND 5X50	70
021	419548-5	BAFFLE PLATE	90
022	211031-6	BALL BEARING 608LLB	190
023	681625-5	INSULATION WASHER	50
024	517763-6	ARMATURE ASS'Y 220V	
025	240003-4	FAN 80	260
026	231297-2	COMPRESSION SPRING 9	80
027	345717-1	SHAFT LOCK	100
028	286275-7	CAP	50
029	267280-3	FLAT WASHER 15	40
030	211236-8	BALL BEARING 6002DDW	550
031	261132-0	URETHANE WASHER 26	70
032	188446-1	BLADE CASE SET	2,340
033	819234-2	MAKITA LOGO PLATE	110
034	251247-1	+ PAN HEAD SCREW M6X20	50
035	262552-1	RUBBER SLEEVE 6	130
036	419553-2	HANDLE COVER	600
037	691015-4	POWER SUPPLY CORD 0.75-2-2.5	740
038	682564-2	CORD GUARD	150
039	266326-2	TAPPING SCREW 4X18	30
040	687140-7	STRAIN RELIEF	40
041	654531-7	TERMINAL BLOCK 2P	190
042	631710-4	LIGHT CIRCUIT	810
044	651189-3	SWITCH TG933TN-2	700
045	158100-1	MOTOR HOUSING COMPLETE	1,630
046	266326-2	TAPPING SCREW 4X18	30
047	331719-3	PIPE 9	80
048	941201-0	FLAT WASHER 8	110
049	272253-3	LEVER 56	150
050	252199-9	HEX. NUT M8-13	80
051	257953-6	BOW STOP RING E-12	50
052	188448-7	REAR COVER SET	540
053	266326-2	TAPPING SCREW 4X18	30
055	911268-2	PAN HEAD SCREW M5X45	100

ITEM	PARTS ID	DESCRIPTION	PRICE/BAHT
058	643650-4	BRUSH HOLDER CAP 6.5-13.5	70
060	257953-6	BOW STOP RING E-12	50
061	272253-3	LEVER 56	150
062	252199-9	HEX. NUT M8-13	80
063	941201-0	FLAT WASHER 8	110
064	345835-5	ANGULAR GUIDE	170
065	256511-5	SHOULDER PIN 6-7	40
066	257759-2	SLEEVE 6	90
067	941101-4	FLAT WASHER 5	20
068	922261-1	HEX. SOCKET HEAD BOLT M5X40	80
069	266396-1	FLAT HEADSQUARE NECKBOLT M8X	70
070	331719-3	PIPE 9	80
071	345833-9	DEPTH GUIDE	250
072	256511-5	SHOULDER PIN 6-7	40
073	266237-1	CAP SQUARE NECK BOLT M8X90	200
074	266229-0	H.S.SET SCREW(CUP POINT)M5X8	80
075	158423-7	BASE COMPLETE	1,830
076	266229-0	H.S.SET SCREW(CUP POINT)M5X8	80
077	251370-2	+ PAN HEAD SCREW M5	80
078	419549-3	DIAL 27	110
079	216008-6	STEEL BALL 4	20
080	233314-4	COMPRESSION SPRING 4	100
081	266229-0	H.S.SET SCREW(CUP POINT)M5X8	80
082	251858-2	SCREW M6X15	120
083	253811-4	FLAT WASHER 5	80
085	450351-5	SPACER	50
A01	164095-8	GUIDE RULE	240
A02	783204-6	HEX. WRENCH 6	110
A03	D-29066	T.C.T.SAW BLADE 210X25.4X24T	1,210

SERVICE DRAWING

MODEL NO. 5103N

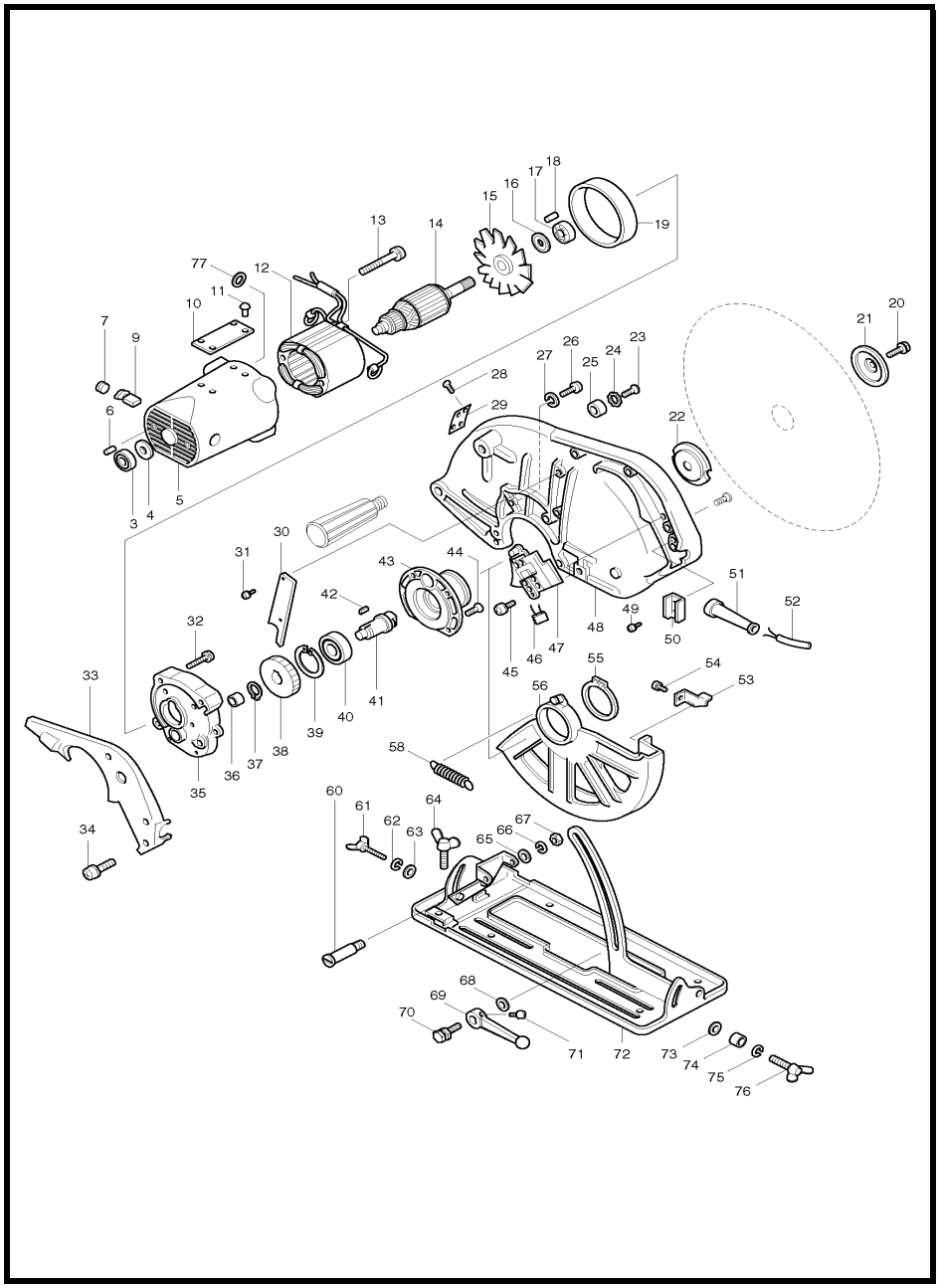

MODEL 5103N

ITEM	PARTS ID	DESCRIPTION	PRICE/BAHT
003	211066-7	BALL BEARING 6200LLB	410
004	213051-6	DUST SEAL 10	120
005	156600-5	MOTOR HOUSING	4,510
006	263002-9	RUBBER PIN 4	30
007	643650-4	BRUSH HOLDER CAP 6.5-13.5	70
009	B-80329	CARBON BRUSH SET CB-153A	
011	953106-2	RIVET 0-5	20
012	524558-0	FIELD ASS'Y 220V	
013	911290-9	PAN HEAD SCREW M5X65	100
014	510007-3	ARMATURE ASS'Y 220V	
016	213202-1	DUST SEAL 15	120
017	211206-7	BALL BEARING 6202LLB	460
018	263005-3	RUBBER PIN 6	30
019	343119-5	BAFFLE PLATE	190
020	265408-7	HEX. SOCKET HEAD BOLT M8X20	120
021	224053-7	OUTER FLANGE 65	530
022	224181-8	INNER FLANGE 65	580
023	251256-0	+ COUNTERSUNK HEAD SCREW M8	80
024	943202-4	TOOTHED LOCK WASHER 8	30
025	262027-0	RUBBER RING 8	100
026	265066-9	+ PAN HEAD SCREW M5X25	80
027	942101-7	SPRING WASHER 5	100
028	911101-8	PAN HEAD SCREW M4X6	20
029	341543-6	PLATE	230
030	341545-2	LEAD COVER	160
031	911106-8	PAN HEAD SCREW M4X8	30
032	911256-9	PAN HEAD SCREW M5X35	40
033	315154-3	HANDLE COVER F/LOCK	830
034	911151-3	PAN HEAD SCREW M4X28	30
035	157030-3	GEAR HOUSING	1,910
036	212101-4	NEEDLE BEARING 1210	360
037	961060-6	RETAINING RING S-20	50
038	221159-2	HELICAL GEAR 69	1,410
039	962203-3	RETAINING RING R-47	120
040	211306-3	BALL BEARING 6204LLB	570
041	325183-8	SPINDLE	1,470
042	254203-0	KEY 4	100
043	312468-1	BEARING BOX	970
044	912116-8	COUNTERSUNK HEAD SCREW M4X1	20
045	911106-8	PAN HEAD SCREW M4X8	30
047	651016-4	SWITCH HPAHR2-2	950
048	316669-3	BLADE CASE	6,610
049	911133-5	PAN HEAD SCREW M4X18	50
050	687054-0	STRAIN RELIEF	50
051	682506-6	CORD GUARD 12-90	100
052	691346-1	POWER SUPPLY CORD 1.25-3-5.0	1,770
053	344966-7	LEVER	120
054	911211-1	PAN HEAD SCREW M5X12	30
055	961253-5	RETAINING RING S-56	190
056	316149-9	SAFETY COVER	2,760
058	231781-7	TENSION SPRING 5	210
060	251407-5	- FLAT HEAD SCREW M8	170

ITEM	PARTS ID	DESCRIPTION	PRICE/BAHT
062	942151-2	SPRING WASHER 6	100
063	253047-5	FLAT WASHER 6	40
064	924326-5	WING BOLT M6X20	100
065	941201-0	FLAT WASHER 8	110
066	942201-3	SPRING WASHER 8	110
067	252105-4	HEX. LOCK NUT M8-13	80
068	941201-0	FLAT WASHER 8	110
069	133014-5	LEVER 98 ASS'Y	470
070	251612-4	HEX. BOLT M8X20	160
071	911207-2	PAN HEAD SCREW M5X10	20
072	133173-5	BASE ASS'Y	4,270
073	253010-8	FLAT WASHER 6	50
074	257506-1	SLEEVE 7	80
075	942151-2	SPRING WASHER 6	100
076	924336-2	WING BOLT M6X25	100
077	681002-1	INSULATION WASHER	30
400	B-12603	TCT SAW BLADE 335X60TX25	5,040
401	781011-1	WRENCH 22	230
402	164019-4	GUIDE RULE	570
403	783204-6	HEX. WRENCH 6	110
404	152492-0	GRIP 36 COMPLETE	230
405	410047-0	WRENCH HOLDER 5.6	100

SERVICE DRAWING

MODEL NO. 5201N

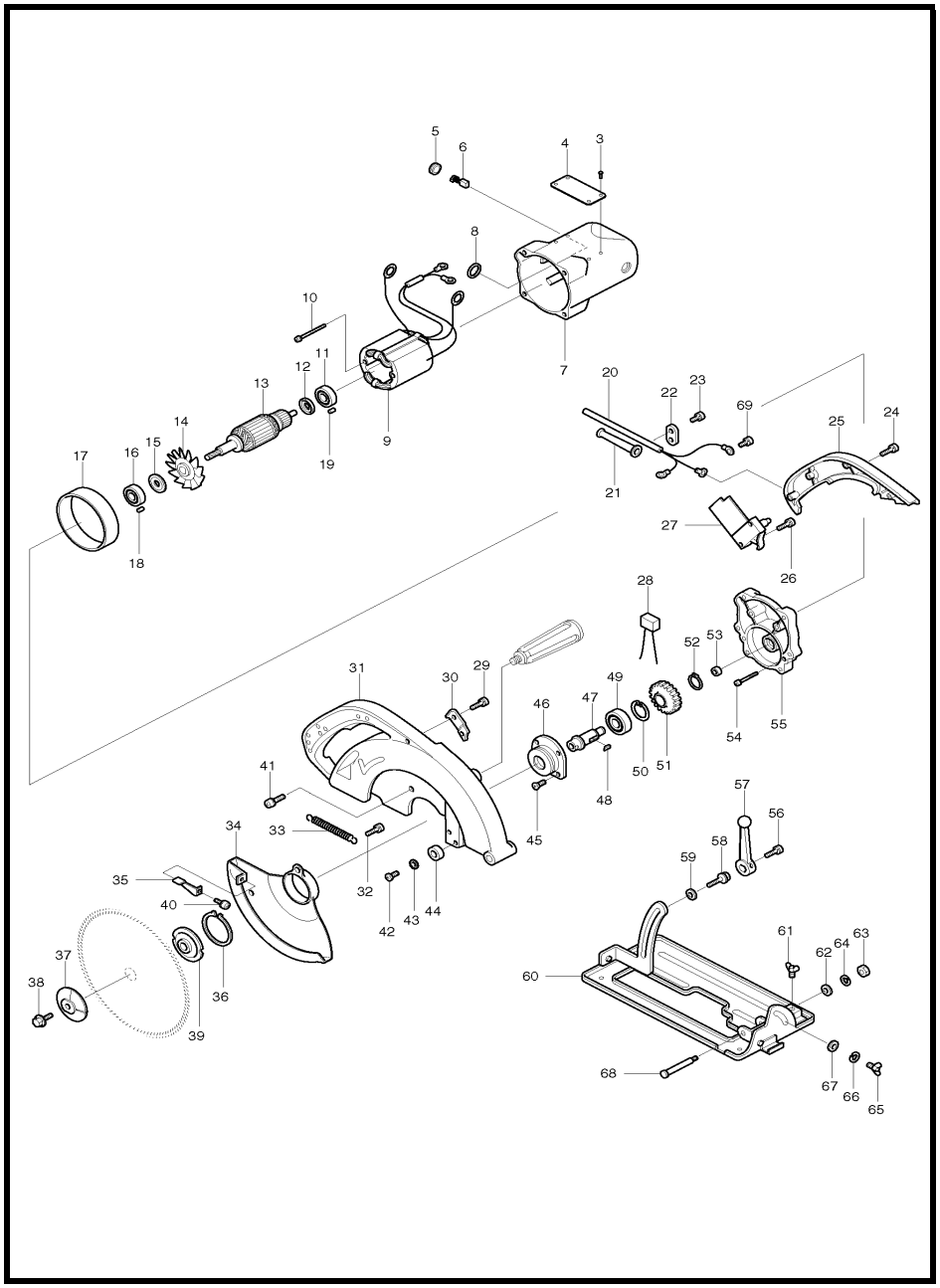

MODEL 5201N

ITEM	PARTS ID	DESCRIPTION	PRICE/BAHT
003	953106-2	RIVET 0-5	20
005	643650-4	BRUSH HOLDER CAP 6.5-13.5	70
007	156600-5	MOTOR HOUSING	4,510
008	681002-1	INSULATION WASHER	30
009	524558-0	FIELD ASS'Y 220V	
010	911290-9	PAN HEAD SCREW M5X65	100
011	211066-7	BALL BEARING 6200LLB	410
012	213051-6	DUST SEAL 10	120
013	510007-3	ARMATURE ASS'Y 220V	
015	213202-1	DUST SEAL 15	120
016	211206-7	BALL BEARING 6202LLB	460
017	343119-5	BAFFLE PLATE	190
018	263005-3	RUBBER PIN 6	30
019	263002-9	RUBBER PIN 4	30
020	691346-1	POWER SUPPLY CORD 1.25-3-5.0	1,770
021	682506-6	CORD GUARD 12-90	100
022	687054-0	STRAIN RELIEF	50
023	911133-5	PAN HEAD SCREW M4X18	50
024	911151-3	PAN HEAD SCREW M4X28	30
025	315158-5	HANDLE COVER F/LOCK	580
026	911106-8	PAN HEAD SCREW M4X8	30
027	651016-4	SWITCH HPAHR2-2	950
029	911106-8	PAN HEAD SCREW M4X8	30
030	341540-2	LEAD COVER	160
031	316697-8	BLADE CASE	4,810
032	251445-7	- FLAT HEAD SCREW M4	120
033	231767-1	TENSION SPRING 5	210
034	312533-6	SAFETY COVER	2,130
035	342462-9	LEVER	120
035	344966-7	LEVER	120
036	961252-7	RETAINING RING S-55	190
037	224053-7	OUTER FLANGE 65	530
038	265408-7	HEX. SOCKET HEAD BOLT M8X20	120
039	224181-8	INNER FLANGE 65	580
040	911211-1	PAN HEAD SCREW M5X12	30
041	911246-2	PAN HEAD SCREW M5X28	50
042	251256-0	+ COUNTERSUNK HEAD SCREW M8	80
043	943202-4	TOOTHED LOCK WASHER 8	30
044	262007-6	RUBBER RING 8	100
045	912116-8	COUNTERSUNK HEAD SCREW M4X1	20
046	312530-2	BEARING BOX	820
047	325183-8	SPINDLE	1,470
048	254203-0	KEY 4	100
049	211306-3	BALL BEARING 6204LLB	570
050	962203-3	RETAINING RING R-47	120
051	221188-5	HELICAL GEAR 54	1,020
052	961060-6	RETAINING RING S-20	50
053	212101-4	NEEDLE BEARING 1210	360
054	911251-9	PAN HEAD SCREW M5X30	50
055	157032-9	GEAR HOUSING	1,840
056	911207-2	PAN HEAD SCREW M5X10	20
057	133014-5	LEVER 98 ASS'Y	470

ITEM	PARTS ID	DESCRIPTION	PRICE/BAHT
059	941201-0	FLAT WASHER 8	110
060	133172-7	BASE ASS'Y	3,000
061	924316-8	WING BOLT M6X15	110
062	941201-0	FLAT WASHER 8	110
063	252105-4	HEX. LOCK NUT M8-13	80
064	942201-3	SPRING WASHER 8	110
065	924316-8	WING BOLT M6X15	110
066	942151-2	SPRING WASHER 6	100
067	941151-9	FLAT WASHER 6	30
068	251407-5	- FLAT HEAD SCREW M8	170
069	652014-1	PAN HEAD SCREW M4X8	30
400	152492-0	GRIP 36 COMPLETE	230
402	164019-4	GUIDE RULE	570
403	781011-1	WRENCH 22	230
404	783204-6	HEX. WRENCH 6	110
405	410047-0	WRENCH HOLDER 5.6	100

SERVICE DRAWING

MODEL NO. 5401N

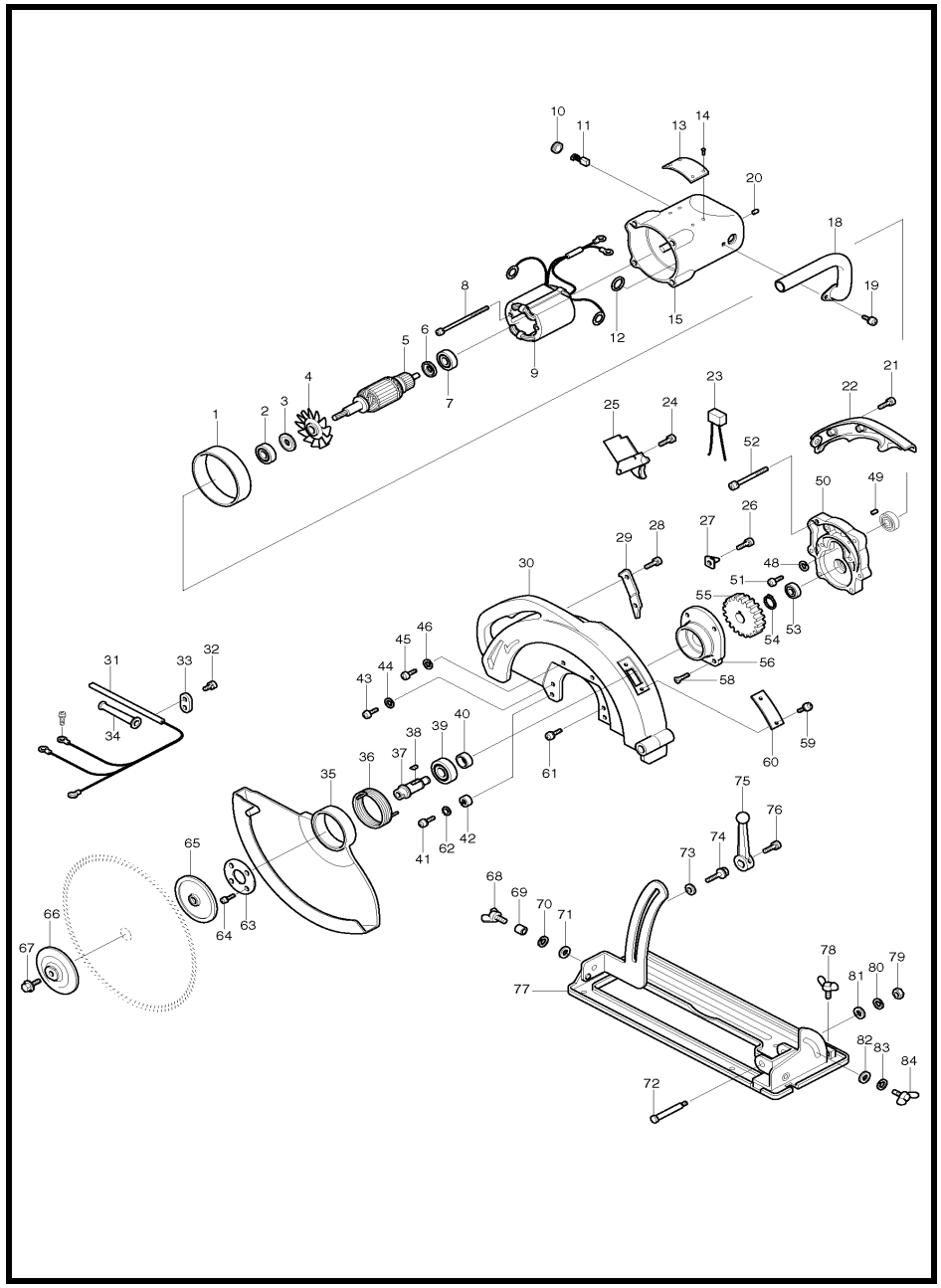

MODEL 5401N

ITEM	PARTS ID	DESCRIPTION	PRICE/BAHT
001	343119-5	BAFFLE PLATE	190
002	211206-7	BALL BEARING 6202LLB	460
003	213202-1	DUST SEAL 15	120
005	514607-1	ARMATURE ASS'Y 220V	
006	213051-6	DUST SEAL 10	120
007	211066-7	BALL BEARING 6200LLB	410
008	911290-9	PAN HEAD SCREW M5X65	100
009	524558-0	FIELD ASS'Y 220V	
010	643650-4	BRUSH HOLDER CAP 6.5-13.5	70
011	B-80329	CARBON BRUSH SET CB-153A	
012	681002-1	INSULATION WASHER	30
014	953106-2	RIVET 0-5	20
015	156603-9	MOTOR HOUSING	4,390
018	273611-6	GRIP	720
019	911321-4	PAN HEAD SCREW M6X16	50
020	263002-9	RUBBER PIN 4	30
021	911151-3	PAN HEAD SCREW M4X28	30
022	315150-1	HANDLE COVER F/LOCK	830
024	911106-8	PAN HEAD SCREW M4X8	30
025	651016-4	SWITCH HPAHR2-2	950
026	911106-8	PAN HEAD SCREW M4X8	30
027	812009-8	INDICATION PLATE	190
028	911106-8	PAN HEAD SCREW M4X8	30
029	341542-8	LEAD COVER	200
030	315149-6	BLADE CASE	7,450
031	691346-1	POWER SUPPLY CORD 1.25-3-5.0	1,770
032	911116-5	PAN HEAD SCREW M4X12	20
033	687600-9	STRAIN RELIEF	50
034	682506-6	CORD GUARD 12-90	100
035	312539-4	SAFETY COVER	4,240
036	231506-9	TORSION SPRING 84	120
037	325212-7	SPINDLE	1,530
038	254001-2	WOODRUFF KEY 4	80
039	211306-3	BALL BEARING 6204LLB	570
040	257032-0	RING 20	250
041	251256-0	+ COUNTERSUNK HEAD SCREW M8	80
042	262007-6	RUBBER RING 8	100
043	251365-5	PAN HEAD SCREW M6X25	130
044	942151-2	SPRING WASHER 6	100
045	265064-3	+ PAN HEAD SCREW M6X30	150
046	942151-2	SPRING WASHER 6	100
048	942101-7	SPRING WASHER 5	100
049	263005-3	RUBBER PIN 6	30
050	157035-3	GEAR HOUSING	1,940
051	265066-9	+ PAN HEAD SCREW M5X25	80
052	251284-5	+ PAN HEAD SCREW M5X30	100
053	211106-1	BALL BEARING 6201LLB	400
054	961060-6	RETAINING RING S-20	50
055	221623-3	HELICAL GEAR 73	1,880
056	312537-8	GEAR HOUSING COVER	1,500
058	912242-3	COUNTERSUNK HEAD SCREW M5X4	70
061	251247-1	+ PAN HEAD SCREW M6X20	50

ITEM	PARTS ID	DESCRIPTION	PRICE/BAHT
063	285812-4	BEARING RETAINER 29-67	810
064	912116-8	COUNTERSUNK HEAD SCREW M4X	20
065	224182-6	INNER FLANGE 90	1,020
066	224074-9	OUTER FLANGE 90	1,670
067	265408-7	HEX. SOCKET HEAD BOLT M8X20	120
068	924336-2	WING BOLT M6X25	100
069	257542-7	SLEEVE 7	190
070	942151-2	SPRING WASHER 6	100
071	253010-8	FLAT WASHER 6	50
072	251405-9	- FLAT HEAD SCREW M8	160
073	941201-0	FLAT WASHER 8	110
074	251612-4	HEX. BOLT M8X20	160
075	133014-5	LEVER 98 ASS'Y	470
076	911207-2	PAN HEAD SCREW M5X10	20
077	133174-3	BASE ASS'Y	5,240
078	924316-8	WING BOLT M6X15	110
079	252105-4	HEX. LOCK NUT M8-13	80
080	942201-3	SPRING WASHER 8	110
081	941201-0	FLAT WASHER 8	110
082	253022-1	FLAT WASHER 8	50
083	942201-3	SPRING WASHER 8	110
084	924426-1	WING BOLT M8X20	150
085	819003-1	MAKITA LABEL	70
086	943102-8	TOOTHED LOCK WASHER 5	60
401	164019-4	GUIDE RULE	570
402	781011-1	WRENCH 22	230
403	783204-6	HEX. WRENCH 6	110
404	410047-0	WRENCH HOLDER 5.6	100

SERVICE DRAWING

MODEL NO. 5402

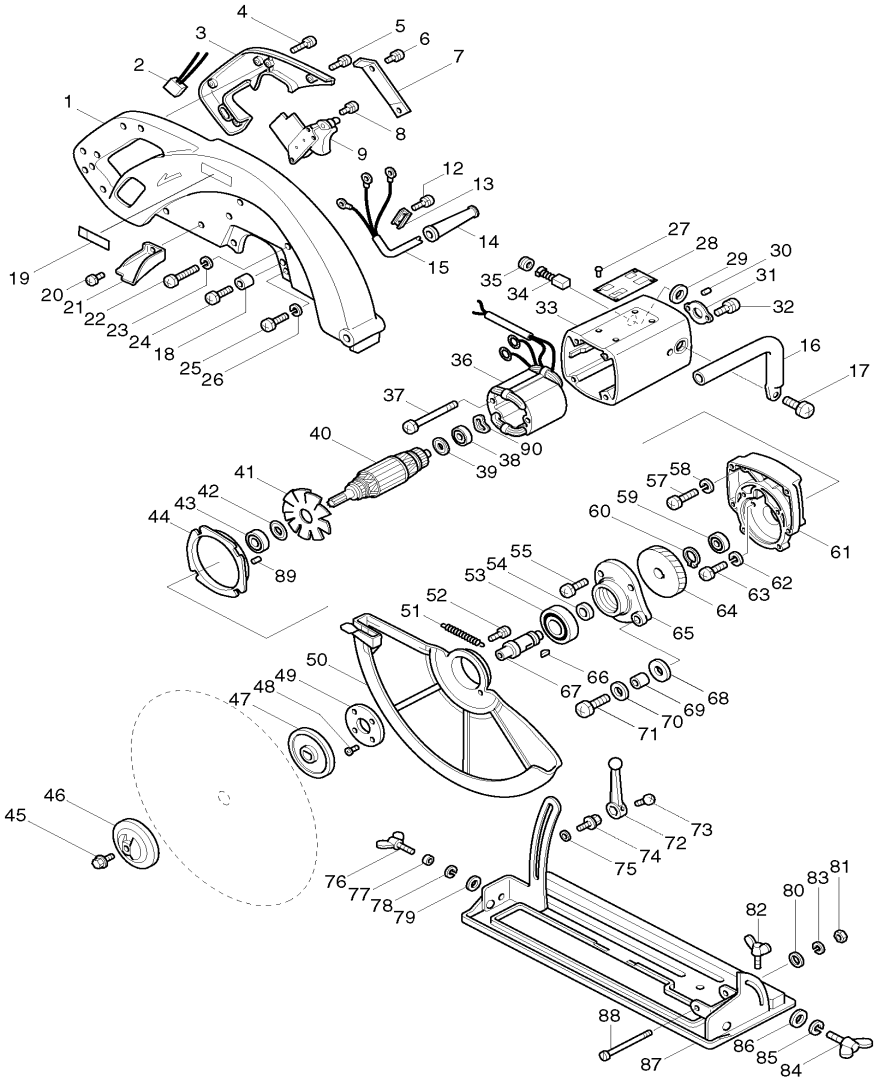

MODEL 5402

ITEM	PARTS ID	DESCRIPTION	PRICE/BAHT
001	312966-5	BLADE CASE	7,510
003	312870-8	HANDLE COVER F/LOCK	1,060
004	911151-3	PAN HEAD SCREW M4X28	30
005	911126-2	PAN HEAD SCREW M4X16	30
006	911106-8	PAN HEAD SCREW M4X8	30
007	342488-1	LEAD COVER	180
008	911106-8	PAN HEAD SCREW M4X8	30
010	911106-8	PAN HEAD SCREW M4X8	30
011	342487-3	PLATE	150
012	911116-5	PAN HEAD SCREW M4X12	20
013	687600-9	STRAIN RELIEF	50
014	682506-6	CORD GUARD 12-90	100
015	691346-1	POWER SUPPLY CORD 1.25-3-5.0	1,770
016	273602-7	GRIP	670
017	911321-4	PAN HEAD SCREW M6X16	50
018	257542-7	SLEEVE 7	190
019	819003-1	MAKITA LABEL	70
020	911106-8	PAN HEAD SCREW M4X8	30
021	343292-1	CHIP GUIDE	230
022	265064-3	+ PAN HEAD SCREW M6X30	150
023	942151-2	SPRING WASHER 6	100
024	911342-6	PAN HEAD SCREW M6X25	90
025	251365-5	PAN HEAD SCREW M6X25	130
026	942151-2	SPRING WASHER 6	100
027	953106-2	RIVET 0-5	20
029	681002-1	INSULATION WASHER	30
030	263005-3	RUBBER PIN 6	30
031	285006-1	BEARING COVER 42	120
032	911211-1	PAN HEAD SCREW M5X12	30
033	156185-1	MOTOR HOUSING	5,360
034	B-80329	CARBON BRUSH SET CB-153A	
035	643650-4	BRUSH HOLDER CAP 6.5-13.5	70
036	524075-0	FIELD ASS'Y 220V	
037	911938-3	PAN HEAD SCREW M5X85	120
038	211066-7	BALL BEARING 6200LLB	410
039	213051-6	DUST SEAL 10	120
040	510093-4	ARMATURE ASS'Y 220V	
042	253147-1	FLAT WASHER 15	50
043	211228-7	BALL BEARING 6202DDW	430
044	343160-8	BAFFLE PLATE	230
045	265408-7	HEX. SOCKET HEAD BOLT M8X20	120
046	224074-9	OUTER FLANGE 90	1,670
047	224182-6	INNER FLANGE 90	1,020
048	912116-8	COUNTERSUNK HEAD SCREW M4X´	20
049	285822-1	BEARING RETAINER	560
050	165218-1	SAFETY COVER	3,810
051	231733-8	TENSION SPRING 7	190
052	911109-2	PAN HEAD SCREW M4X8	40
053	211306-3	BALL BEARING 6204LLB	570
054	257032-0	RING 20	250
055	911241-2	PAN HEAD SCREW M5X25	110
057	265063-5	+ PAN HEAD SCREW M5X35	120

ITEM	PARTS ID	DESCRIPTION	PRICE/BAHT
059	211106-1	BALL BEARING 6201LLB	400
060	961060-6	RETAINING RING S-20	50
061	157034-5	GEAR HOUSING	2,080
062	942101-7	SPRING WASHER 5	100
063	265066-9	+ PAN HEAD SCREW M5X25	80
064	221623-3	HELICAL GEAR 73	1,880
065	315774-3	GEAR HOUSING COVER	1,290
066	254001-2	WOODRUFF KEY 4	80
067	325212-7	SPINDLE	1,530
068	262007-6	RUBBER RING 8	100
069	257541-9	SLEEVE 8	160
070	253022-1	FLAT WASHER 8	50
071	911451-1	PAN HEAD SCREW M8X30	70
072	133014-5	LEVER 98 ASS'Y	470
073	911207-2	PAN HEAD SCREW M5X10	20
074	251612-4	HEX. BOLT M8X20	160
075	941201-0	FLAT WASHER 8	110
076	924336-2	WING BOLT M6X25	100
077	257542-7	SLEEVE 7	190
078	942151-2	SPRING WASHER 6	100
079	253010-8	FLAT WASHER 6	50
080	941201-0	FLAT WASHER 8	110
081	252105-4	HEX. LOCK NUT M8-13	80
082	924316-8	WING BOLT M6X15	110
083	942201-3	SPRING WASHER 8	110
084	924426-1	WING BOLT M8X20	150
085	942201-3	SPRING WASHER 8	110
086	253022-1	FLAT WASHER 8	50
087	134290-4	BASE ASS'Y	5,170
088	251405-9	- FLAT HEAD SCREW M8	160
089	263005-3	RUBBER PIN 6	30
090	253913-6	WAVE WASHER 20	50
401	164019-4	GUIDE RULE	570
402	781011-1	WRENCH 22	230
403	783204-6	HEX. WRENCH 6	110
404	410047-0	WRENCH HOLDER 5.6	100
900	267148-3	FLAT WASHER 23	80

SERVICE DRAWING

MODEL NO. 5600NB

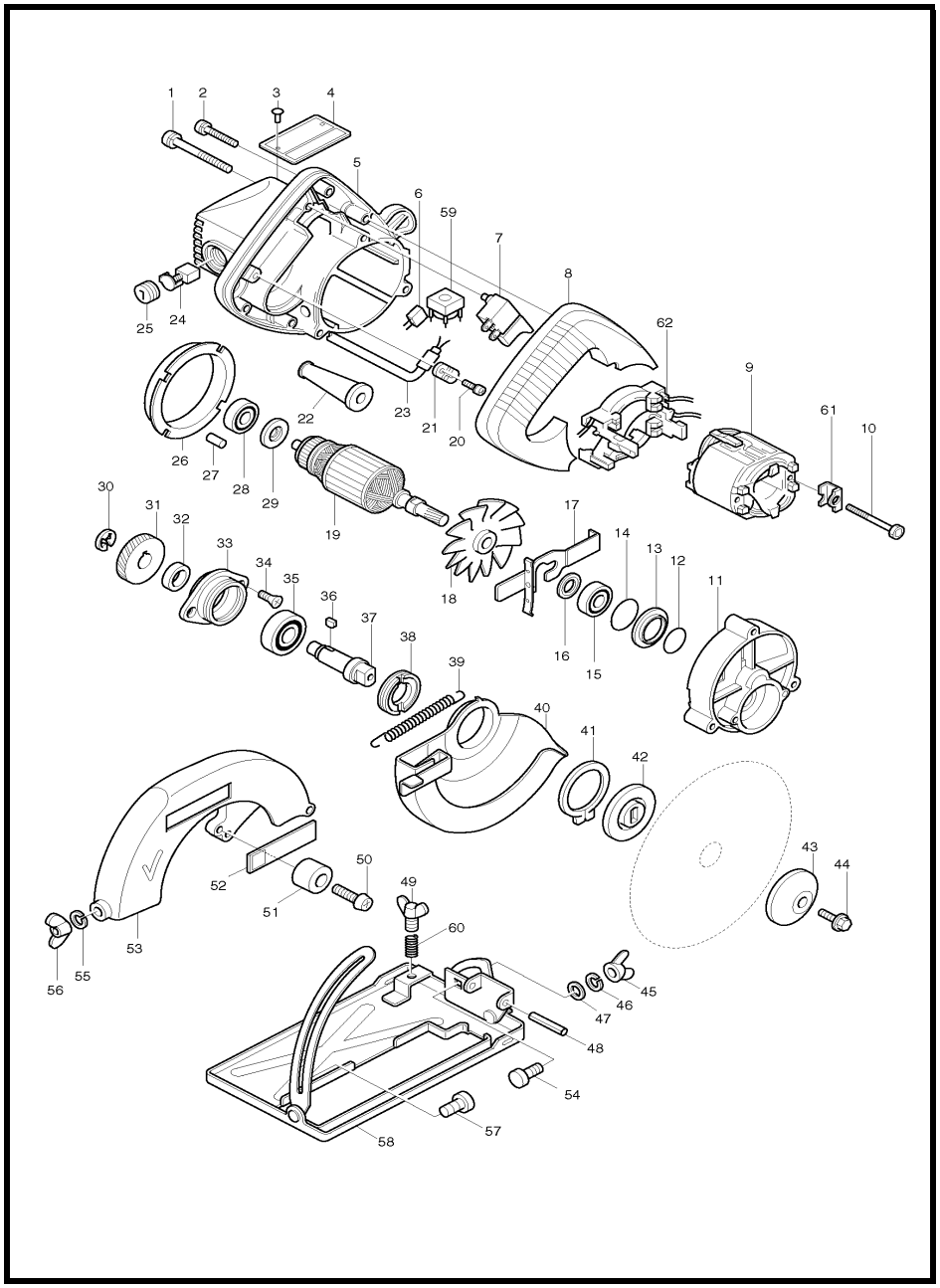

MODEL 5600NB

ITEM	PARTS ID	DESCRIPTION	PRICE/BAHT
001	911283-6	PAN HEAD SCREW M5X60	80
002	911148-2	PAN HEAD SCREW M4X25	70
003	953106-2	RIVET 0-5	20
004	815023-3	NAME PLATE 5600NB	150
005	159220-4	MOTOR HOUSING COMPLETE	1,970
007	651204-3	SWITCH SGEL115CDY	420
008	414745-8	HANDLE COVER	410
009	634088-4	FIELD 220V	
010	911280-2	PAN HEAD SCREW M5X55	80
011	156382-9	GEAR HOUSING	1,370
012	213008-7	O RING 22.4	40
013	343295-5	WASHER 19	80
014	213407-3	O RING 26	40
015	210042-8	BALL BEARING 629LLB	250
016	253768-9	FLAT WASHER 9	100
017	163096-3	SPINDLE LOCK	250
019	512554-0	ARMATURE ASS'Y 220V	
020	911133-5	PAN HEAD SCREW M4X18	50
021	687053-2	STRAIN RELIEF	70
022	682504-0	CORD GUARD 10-85	190
023	691015-4	POWER SUPPLY CORD 0.75-2-2.5	740
024	B-80298	CARBON BRUSH SET CB-100A	
025	643600-9	BRUSH HOLDER CAP 6-10	70
026	343289-0	BAFFLE PLATE	120
027	263002-9	RUBBER PIN 4	30
028	211031-6	BALL BEARING 608LLB	190
029	681613-2	INSULATION WASHER	80
030	961016-9	STOP RING E-10	40
031	221604-7	HELICAL GEAR 46	690
032	257010-0	RING 12	110
033	312261-3	BEARING BOX	480
034	251295-0	+ COUNTERSUNK HEAD SCREW M4	50
035	211106-1	BALL BEARING 6201LLB	400
036	254011-9	WOODRUFF KEY 4	90
037	325239-7	SPINDLE	820
038	285802-7	BEARING RETAINER 19-33	170
039	231744-3	TENSION SPRING 4	120
040	164428-7	SAFETY COVER	750
041	961155-5	RETAINING RING S-38	150
042	224180-0	INNER FLANGE 45	360
043	224011-3	OUTER FLANGE 45	320
044	251609-3	HEX. FLANGE HEAD BOLT M6X17	70
045	934301-3	WING NUT M6	100
046	942151-2	SPRING WASHER 6	100
047	941151-9	FLAT WASHER 6	30
048	951175-7	SPRING PIN 5-36	80
049	924316-8	WING BOLT M6X15	110
050	251247-1	+ PAN HEAD SCREW M6X20	50
051	262502-6	RUBBER SLEEVE 6	80
052	819003-1	MAKITA LABEL	70
053	312857-0	BLADE CASE	1,240
054	251919-8	CAP SQUARE NECK BOLT M6X20	50
056	934301-3	WING NUT M6	100
057	251919-8	CAP SQUARE NECK BOLT M6X20	50
058	133144-2	BASE ASS'Y	1,440
060	231316-4	COMPRESSION SPRING 7	50
061	343657-7	RETAINER	80
062	632120-8	SUPPORT COMPLETE	430
400	A-81371	T.C.T. SAW BLADE 160X24TX20	1,310
401	164095-8	GUIDE RULE	240
402	782209-3	SOCKET WRENCH 9	220

SERVICE DRAWING

MODEL NO. 5606B

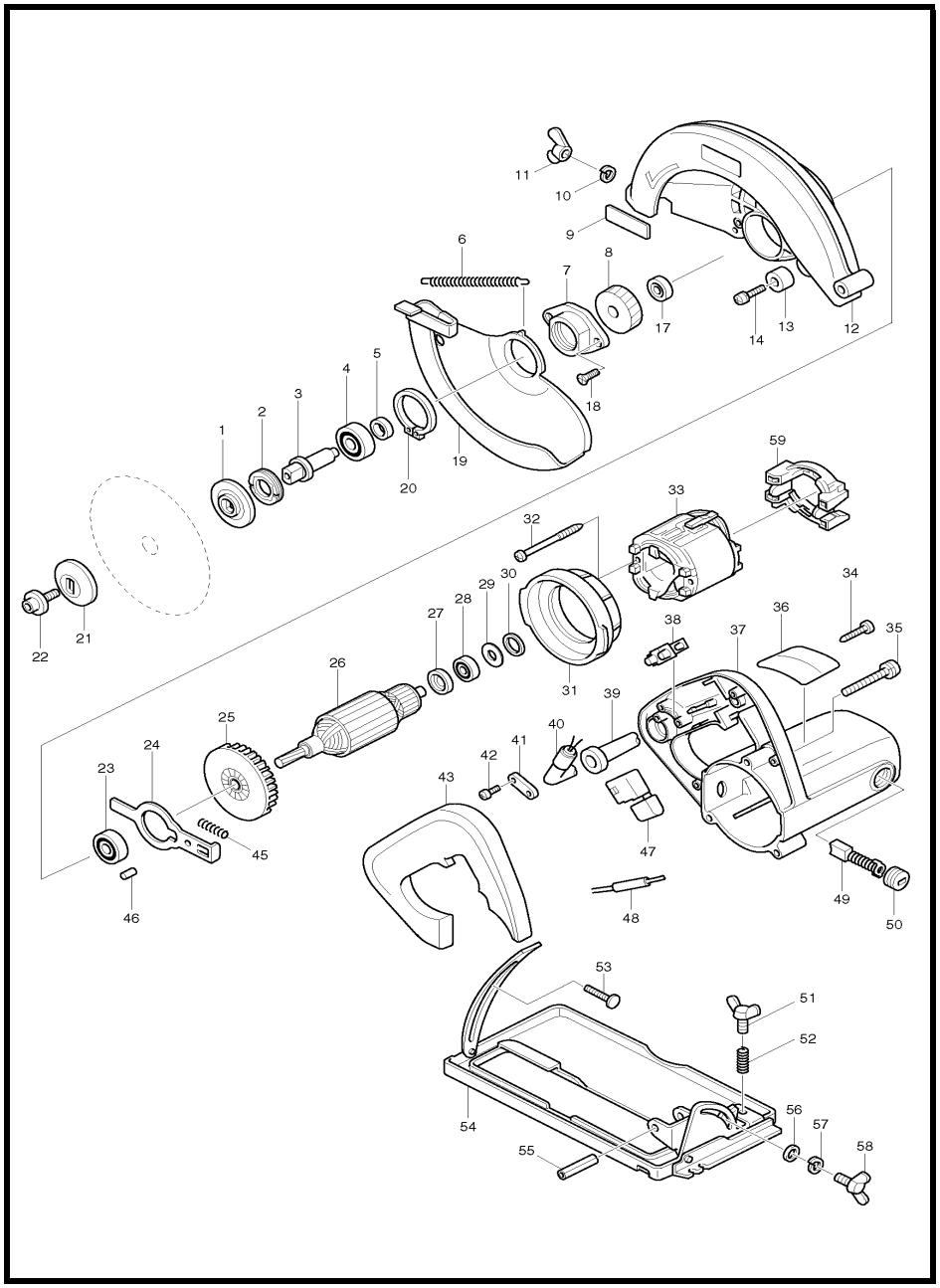

MODEL 5606B

ITEM	PARTS ID	DESCRIPTION	PRICE/BAHT
001	224180-0	INNER FLANGE 45	360
002	285802-7	BEARING RETAINER 19-33	170
003	322838-6	SPINDLE	670
004	211129-9	BALL BEARING 6201DDW	300
005	257173-2	RING 12	80
006	231809-1	TENSION SPRING 4	100
007	316849-1	BEARING BOX	220
008	226467-6	HELICAL GEAR 47	820
009	819063-3	MAKITA LABEL	30
010	942151-2	SPRING WASHER 6	100
011	934301-3	WING NUT M6	100
012	153665-8	BLADE CASE COMPLETE	860
013	262502-6	RUBBER SLEEVE 6	80
014	251247-1	+ PAN HEAD SCREW M6X20	50
017	211012-0	BALL BEARING 606ZZ	230
018	265034-2	+ COUNTERSUNK HEAD SCREW M5	60
019	165368-2	SAFETY COVER	1,030
020	961155-5	RETAINING RING S-38	150
021	224329-2	OUTER FLANGE 45	190
022	266024-8	HEX. SOCKET HEAD BOLT M6X20	120
023	211097-6	BALL BEARING 6000LLB	330
024	344317-4	SHAFT LOCK	160
025	241858-0	FAN 70	260
027	681613-2	INSULATION WASHER	80
028	211033-2	BALL BEARING 608LB	200
029	253192-6	FLAT WASHER 14	70
030	261109-5	RUBBER WASHER 13	50
031	415873-2	BAFFLE PLATE	100
032	266095-5	TAPPING SCREW 5X55	120
033	634153-9	FIELD 220V	
034	266045-0	TAPPING SCREW 4X20	50
035	911268-2	PAN HEAD SCREW M5X45	100
036	851561-1	NAME PLATE 5606B	80
037	159909-4	MOTOR HOUSING COMPLETE	930
039	682504-0	CORD GUARD 10-85	190
040	691015-4	POWER SUPPLY CORD 0.75-2-2.5	740
041	687053-2	STRAIN RELIEF	70
042	265995-6	TAPPING SCREW 4X18	40
043	415980-1	HANDLE COVER	280
045	233092-6	COMPRESSION SPRING 5	50
046	263002-9	RUBBER PIN 4	30
047	651281-5	SWITCH SGEL115CDY-5	390
048	683184-5	POLYETHYLENE TUBE 8-30	50
049	B-80379	CARBON BRUSH SET CB-303A	190
050	643750-0	BRUSH HOLDER CAP	70
051	924316-8	WING BOLT M6X15	110
052	231316-4	COMPRESSION SPRING 7	50
053	266018-3	F. HEAD SQUARE NECK BOLT M6X2	80
054	168297-8	BASE	1,050
055	951222-4	SPRING PIN 6-36	80
056	941151-9	FLAT WASHER 6	30
057	942151-2	SPRING WASHER 6	100

ITEM	PARTS ID	DESCRIPTION	PRICE/BAHT
059	135486-0	SUPPORT ASS'Y	470
A01	783203-8	HEX. WRENCH 5	100
A02	164095-8	GUIDE RULE	240
A04	410047-0	WRENCH HOLDER 5.6	100
A05	A-80612	T.C.T.BLADE 160X40TX20	1,920

SERVICE DRAWING

MODEL NO. 5800NB

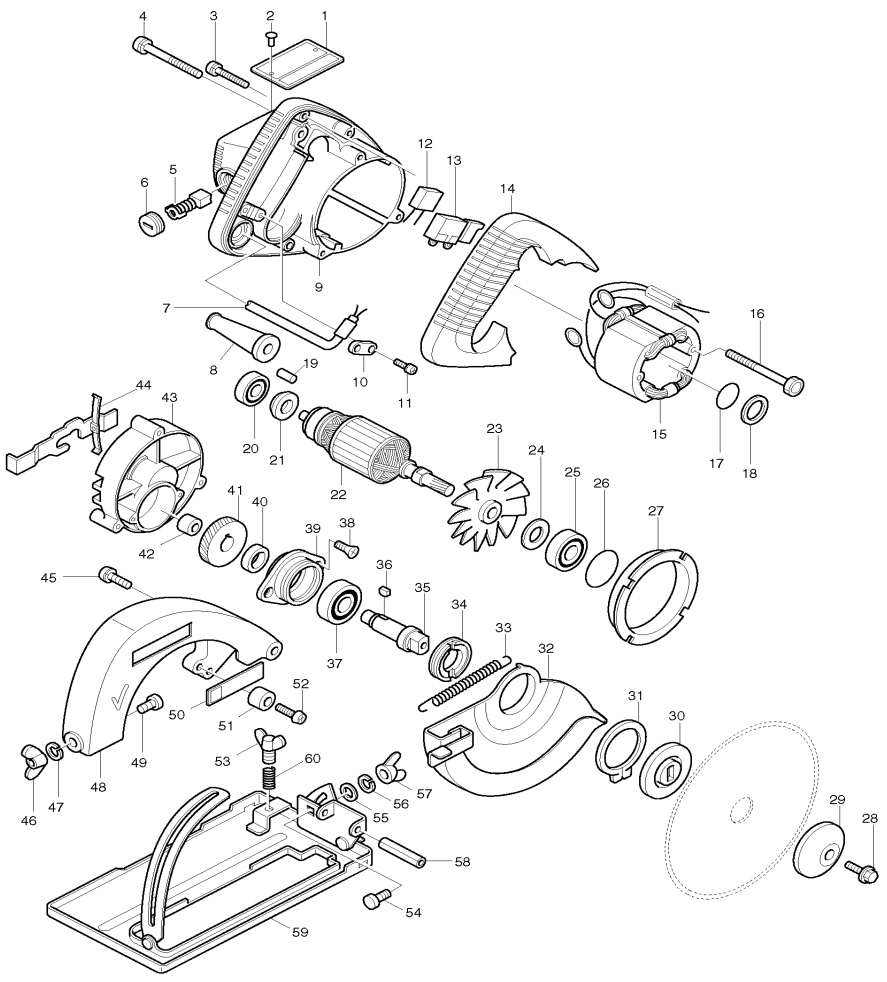

MODEL 5800NB

ITEM	PARTS ID	DESCRIPTION	PRICE/BAHT
001	858423-4	NAME PLATE 5800NB	100
002	953106-2	RIVET 0-5	20
003	911148-2	PAN HEAD SCREW M4X25	70
004	911288-6	PAN HEAD SCREW M5X65	80
005	B-80298	CARBON BRUSH SET CB-100A	
006	643600-9	BRUSH HOLDER CAP 6-10	70
007	691227-9	POWER SUPPLY CORD 1.25-2-5.0	1,290
008	682504-0	CORD GUARD 10-85	190
009	159912-5	MOTOR HOUSING COMPLETE	1,870
010	687000-3	STRAIN RELIEF	40
011	911133-5	PAN HEAD SCREW M4X18	50
013	651204-3	SWITCH SGEL115CDY	420
014	414681-8	HANDLE COVER	550
015	522145-9	FIELD ASS'Y 220V	
016	911681-4	PAN HEAD SCREW M5X60	100
017	213255-0	O RING 18	30
018	253192-6	FLAT WASHER 14	70
019	263002-9	RUBBER PIN 4	30
020	211031-6	BALL BEARING 608LLB	190
021	681613-2	INSULATION WASHER	80
022	512583-3	ARMATURE ASS'Y 220V	
024	253769-7	FLAT WASHER 10	100
025	211066-7	BALL BEARING 6200LLB	410
026	213406-5	O RING 30	30
027	344122-9	BAFFLE PLATE	160
028	251609-3	HEX. FLANGE HEAD BOLT M6X17	70
029	224011-3	OUTER FLANGE 45	320
030	224180-0	INNER FLANGE 45	360
031	961155-5	RETAINING RING S-38	150
032	164911-4	SAFETY COVER	910
033	231730-4	TENSION SPRING 4	910
034	285802-7	BEARING RETAINER 19-33	170
035	325079-3	SPINDLE	780
036	254011-9	WOODRUFF KEY 4	90
037	211106-1	BALL BEARING 6201LLB	400
038	912122-3	COUNTERSUNK HEAD SCREW M4X1	20
039	312261-3	BEARING BOX	480
040	257012-6	RING 12	100
041	221602-1	HELICAL GEAR 44	640
042	212004-2	NEEDLE BEARING 810	290
043	157060-4	GEAR HOUSING	1,260
044	163097-1	SPINDLE LOCK	160
045	911306-0	PAN HEAD SCREW M6X10	30
046	934301-3	WING NUT M6	100
047	942151-2	SPRING WASHER 6	100
048	316111-4	BLADE CASE	1,100
049	251919-8	CAP SQUARE NECK BOLT M6X20	50
050	819003-1	MAKITA LABEL	70
051	262502-6	RUBBER SLEEVE 6	80
052	251247-1	+ PAN HEAD SCREW M6X20	50
053	924316-8	WING BOLT M6X15	110
054	251919-8	CAP SQUARE NECK BOLT M6X20	50
056	942151-2	SPRING WASHER 6	100
057	934301-3	WING NUT M6	100
058	951222-4	SPRING PIN 6-36	80
059	133149-2	BASE ASS'Y	1,670

SERVICE DRAWING

MODEL NO. 5806B

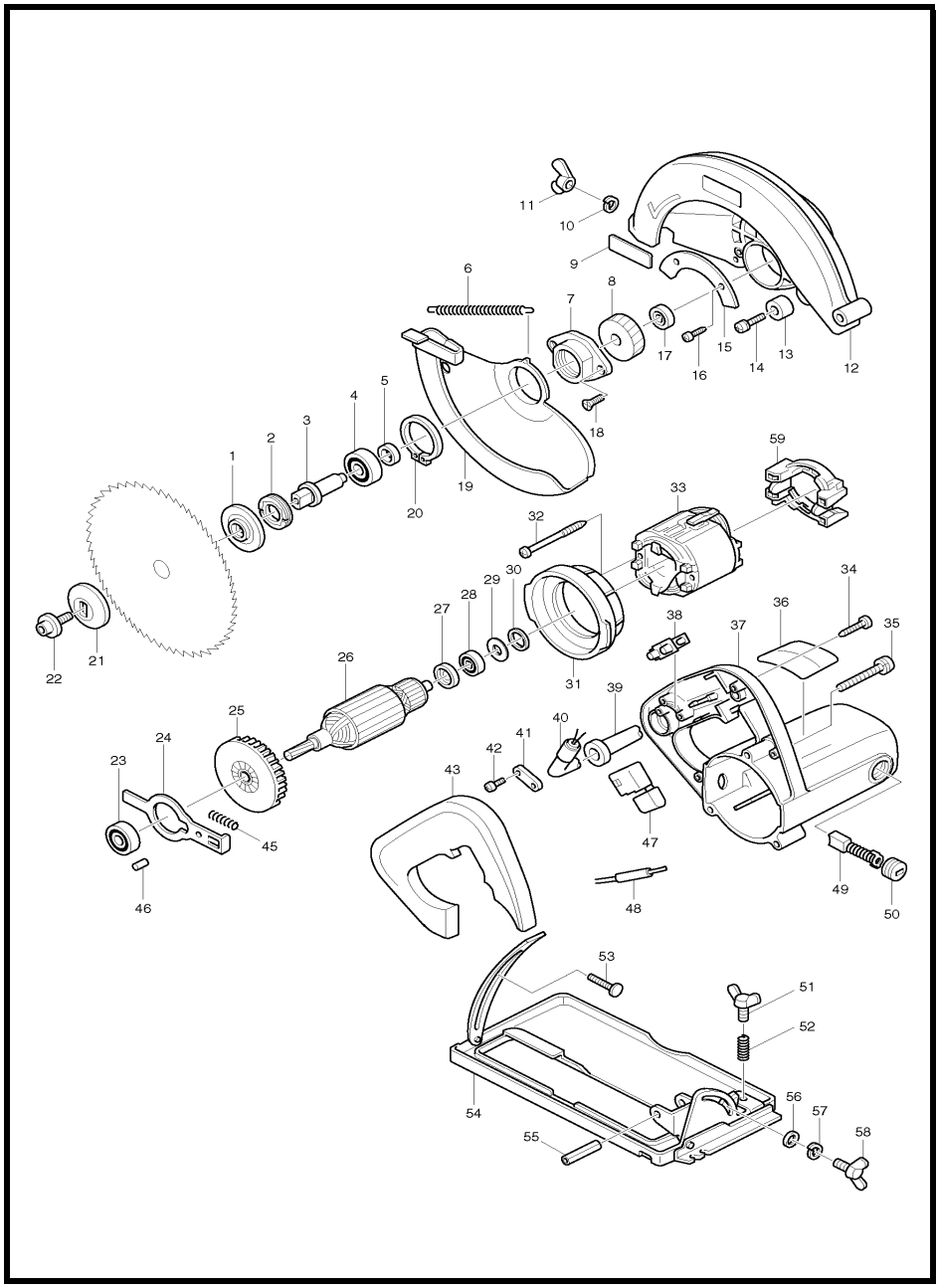

MODEL 5806B

ITEM	PARTS ID	DESCRIPTION	PRICE/BAHT
001	224180-0	INNER FLANGE 45	360
002	285802-7	BEARING RETAINER 19-33	170
003	322838-6	SPINDLE	670
004	211129-9	BALL BEARING 6201DDW	300
005	257173-2	RING 12	80
006	231808-3	TENSION SPRING 4	100
007	316849-1	BEARING BOX	220
008	226461-8	HELICAL GEAR 47	390
009	819063-3	MAKITA LABEL	30
010	942151-2	SPRING WASHER 6	100
011	934301-3	WING NUT M6	100
012	153664-0	BLADE CASE COMPLETE	1,040
013	262502-6	RUBBER SLEEVE 6	80
014	251247-1	+ PAN HEAD SCREW M6X20	50
015	344365-3	COVER PLATE	80
016	266026-4	TAPPING SCREW BIND CT 4X12	30
017	211012-0	BALL BEARING 606ZZ	230
018	265034-2	+ COUNTERSUNK HEAD SCREW M5	60
019	165051-1	SAFETY COVER	
019	165367-4	SAFETY COVER	1,130
020	961155-5	RETAINING RING S-38	150
021	224329-2	OUTER FLANGE 45	190
022	266024-8	HEX. SOCKET HEAD BOLT M6X20	120
023	211097-6	BALL BEARING 6000LLB	330
024	344317-4	SHAFT LOCK	160
026	516273-0	ARMATURE ASS'Y 220V	
027	681613-2	INSULATION WASHER	80
028	211033-2	BALL BEARING 608LB	200
029	253192-6	FLAT WASHER 14	70
030	261109-5	RUBBER WASHER 13	50
031	415873-2	BAFFLE PLATE	100
032	266044-2	TAPPING SCREW 5X60	130
033	634413-9	FIELD 220V	
034	266045-0	TAPPING SCREW 4X20	50
035	911268-2	PAN HEAD SCREW M5X45	100
036	851562-9	NAME PLATE 5806B	100
037	150952-6	MOTOR HOUSING COMPLETE	
037	152869-9	MOTOR HOUSING COMPLETE	1,210
039	682505-8	CORD GUARD 10-90	150
040	691015-4	POWER SUPPLY CORD 0.75-2-2.5	740
041	687053-2	STRAIN RELIEF	70
042	265995-6	TAPPING SCREW 4X18	40
043	415978-8	HANDLE COVER	280
045	233092-6	COMPRESSION SPRING 5	50
046	263002-9	RUBBER PIN 4	30
047	651281-5	SWITCH SGEL115CDY-5	390
048	683184-5	POLYETHYLENE TUBE 8-30	50
049	B-80379	CARBON BRUSH SET CB-303A	190
050	643750-0	BRUSH HOLDER CAP	70
051	924316-8	WING BOLT M6X15	110
052	231316-4	COMPRESSION SPRING 7	50
053	266018-3	F. HEAD SQUARE NECK BOLT M6X2	80

ITEM	PARTS ID	DESCRIPTION	PRICE/BAHT
055	951222-4	SPRING PIN 6-36	80
056	941151-9	FLAT WASHER 6	30
057	942151-2	SPRING WASHER 6	100
058	924316-8	WING BOLT M6X15	110
059	135486-0	SUPPORT ASS'Y	470
A01	783203-8	HEX. WRENCH 5	100
A02	164095-8	GUIDE RULE	240
A04	410047-0	WRENCH HOLDER 5.6	100
A05	A-80628	T.C.T.SAW BLADE 185X40TX20	1,820

SERVICE DRAWING

MODEL NO. 6010B

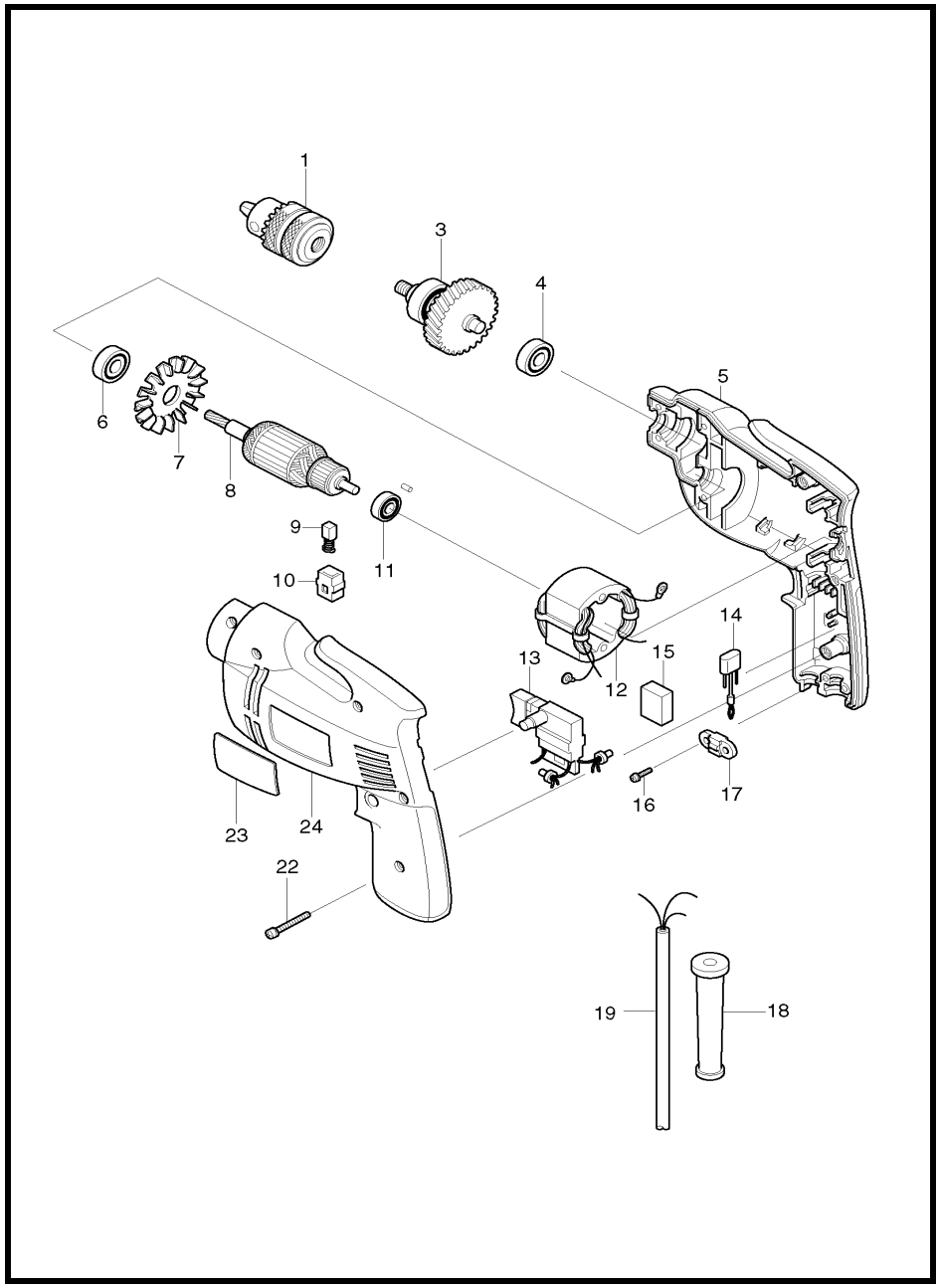

MODEL 6010B

ITEM	PARTS ID	DESCRIPTION	PRICE/BAHT
001	192970-8	DRILL CHUCK	870
003	153115-3	GEAR COMPLETE	1,700
004	211030-8	BALL BEARING 627Z	290
005	182520-7	HOUSING SET	1,970
006	211030-8	BALL BEARING 627Z	290
008	511753-1	ARMATURE ASS'Y 220V	
009	B-80254	CARBON BRUSH SET CB-64A	
010	643552-4	BRUSH HOLDER 5-8	100
011	210047-8	BALL BEARING 626Z	270
012	521363-6	FIELD ASS'Y 220V	
013	651315-4	SWITCH SGEL208M	1,280
015	685717-2	SPONGE SHEET	50
016	911133-5	PAN HEAD SCREW M4X18	50
017	687001-1	STRAIN RELIEF	50
018	682504-0	CORD GUARD 10-85	190
019	691015-4	POWER SUPPLY CORD 0.75-2-2.5	740
022	911148-2	PAN HEAD SCREW M4X25	70
023	855040-1	NAME PLATE 6010B	80
024	182520-7	HOUSING SET	1,970
400	763418-3	CHUCK KEY S10	150
401	411780-7	KEY HOLDER 10	50

SERVICE DRAWING

MODEL NO. 6013B

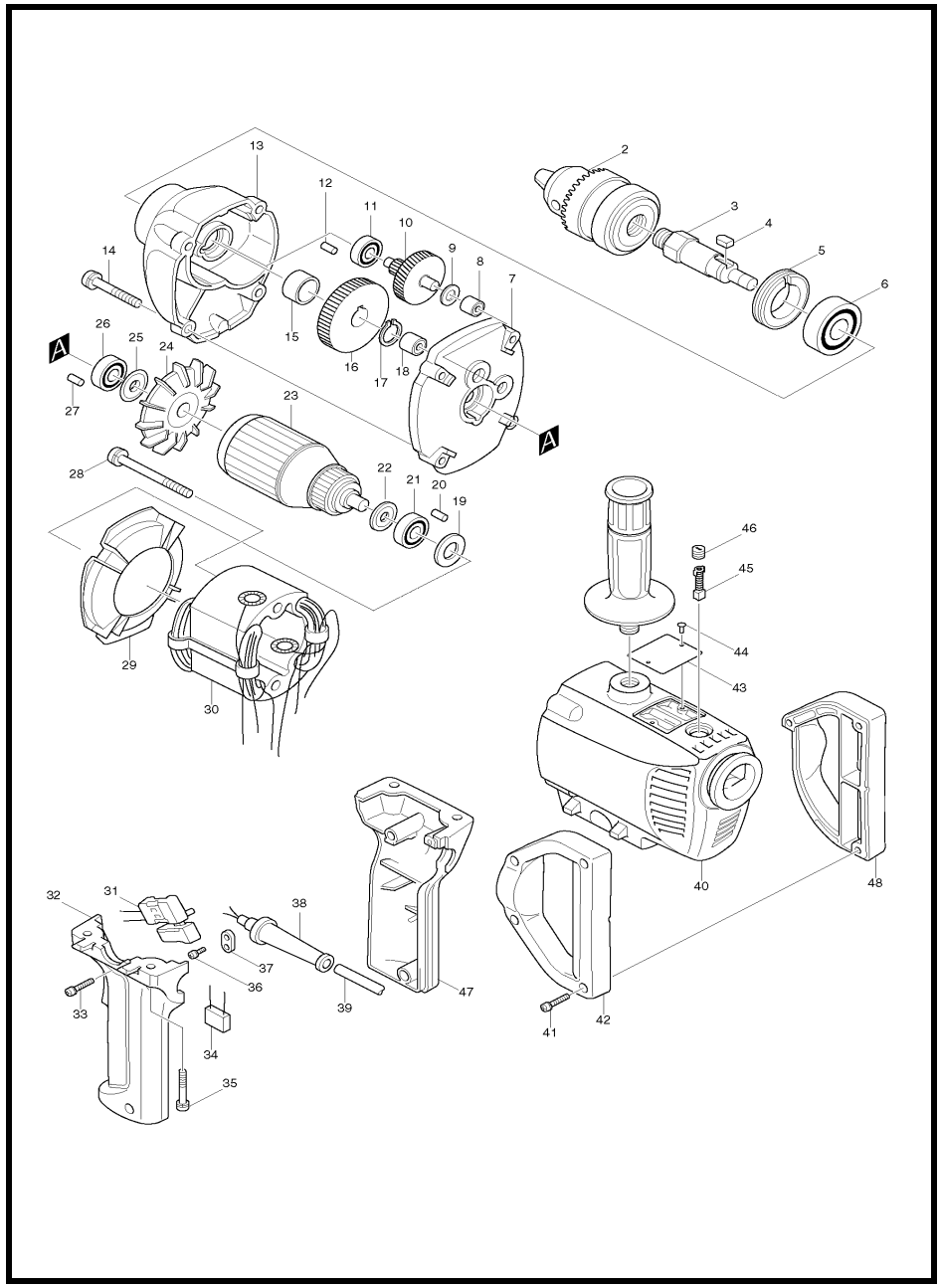

MODEL 6013B

ITEM	PARTS ID	DESCRIPTION	PRICE/BAHT
002	192877-8	DRILL CHUCK S13	2,550
003	325494-1	SPINDLE	1,260
004	254211-1	KEY 5	80
005	285808-5	BEARING RETAINER 25-36	170
006	211206-7	BALL BEARING 6202LLB	460
007	156972-8	GEAR HOUSING COVER	910
008	212012-3	NEEDLE BEARING 609	320
009	261008-1	FIBER WASHER 6	30
010	226028-2	GEAR COMPLETE 7-41	1,140
011	211016-2	BALL BEARING 626LLB	320
012	263002-9	RUBBER PIN 4	30
013	156971-0	GEAR HOUSING	1,520
014	911256-9	PAN HEAD SCREW M5X35	40
015	257018-4	RING 15	150
016	221261-1	SPUR GEAR 47	720
017	961054-1	RETAINING RING S-14	30
018	212003-4	NEEDLE BEARING 810	290
019	253192-6	FLAT WASHER 14	70
020	263002-9	RUBBER PIN 4	30
021	211033-2	BALL BEARING 608LB	200
022	681613-2	INSULATION WASHER	80
023	512608-3	ARMATURE ASS'Y 220V	
025	213002-9	DUST SEAL 8	120
026	211031-6	BALL BEARING 608LLB	190
027	263002-9	RUBBER PIN 4	30
028	911280-2	PAN HEAD SCREW M5X55	80
029	411487-5	FAN GUIDE	160
030	522433-4	FIELD ASS'Y 220V	
031	650224-4	SWITCH SGEL115CDY-10	360
032	188083-1	SWITCH HANDLE SET	900
033	911153-9	PAN HEAD SCREW M4X28	30
035	911248-8	PAN HEAD SCREW M5X28	50
036	911133-5	PAN HEAD SCREW M4X18	50
037	687001-1	STRAIN RELIEF	50
038	682504-0	CORD GUARD 10-85	190
039	691015-4	POWER SUPPLY CORD 0.75-2-2.5	740
040	156443-5	MOTOR HOUSING	2,370
041	911153-9	PAN HEAD SCREW M4X28	30
042	181162-4	HANDLE SET	730
044	953106-2	RIVET 0-5	20
045	B-80232	CARBON BRUSH SET CB-51A	
046	643550-8	BRUSH HOLDER CAP 5-8	100
047	188083-1	SWITCH HANDLE SET	900
048	181162-4	HANDLE SET	730
400	763432-9	CHUCK KEY S13	230
401	152492-0	GRIP 36 COMPLETE	230

SERVICE DRAWING

MODEL NO. 6016

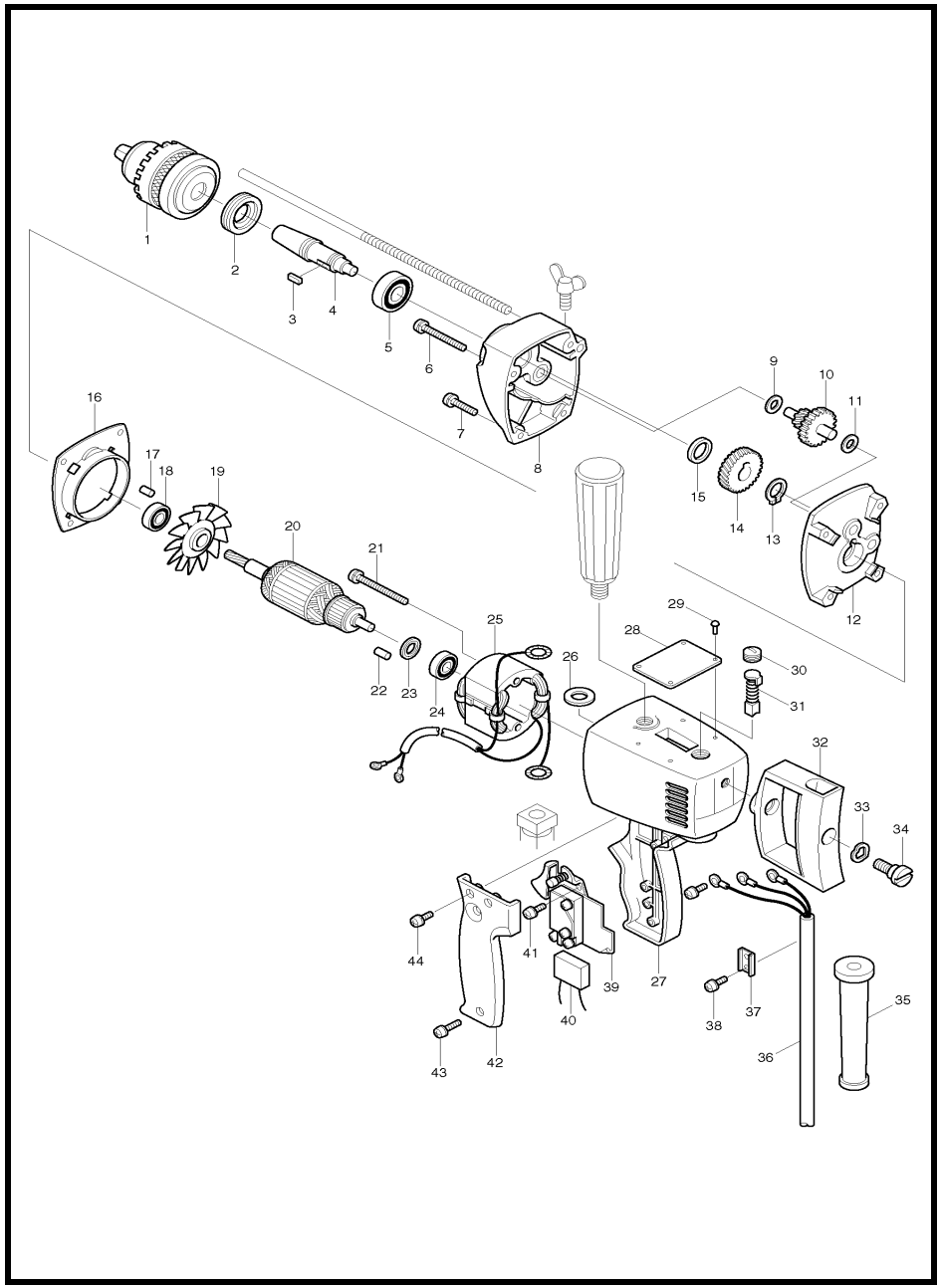

MODEL 6016

ITEM	PARTS ID	DESCRIPTION	PRICE/BAHT
001	763011-3	DRILL CHUCK 16	4,320
002	285807-7	BEARING RETAINER 22-36	170
003	254211-1	KEY 5	80
004	325085-8	SPINDLE	1,410
005	211206-7	BALL BEARING 6202LLB	460
006	911271-3	PAN HEAD SCREW M5X50	50
007	911251-9	PAN HEAD SCREW M5X30	50
008	156652-6	GEAR HOUSING	2,040
009	261011-2	FIBER WASHER 8	30
010	226009-6	GEAR COMPLETE 11-47	1,440
011	261011-2	FIBER WASHER 8	30
012	156651-8	GEAR HOUSING COVER	1,390
013	961055-9	RETAINING RING S-15	50
014	221105-5	HELICAL GEAR 56	1,090
015	257043-5	RING 15	160
016	343077-5	BAFFLE PLATE	270
017	263002-9	RUBBER PIN 4	30
018	210042-8	BALL BEARING 629LLB	250
020	512165-1	ARMATURE ASS'Y 220V	
021	911280-2	PAN HEAD SCREW M5X55	80
022	263002-9	RUBBER PIN 4	30
023	213001-1	DUST SEAL 7	120
024	210025-8	BALL BEARING 627LLB	250
025	522165-3	FIELD ASS'Y 220V	
026	681000-5	INSULATION WASHER	30
027	159587-0	MOTOR HOUSING	4,600
029	953106-2	RIVET 0-5	20
030	643550-8	BRUSH HOLDER CAP 5-8	100
031	B-80232	CARBON BRUSH SET CB-51A	
032	273605-1	GRIP	660
033	253904-7	WAVE WASHER 12	40
034	251411-4	- FLAT HEAD SCREW M10	230
035	682504-0	CORD GUARD 10-85	190
036	691134-6	POWER SUPPLY CORD 0.75-3-2.5	1,010
037	687053-2	STRAIN RELIEF	70
038	911133-5	PAN HEAD SCREW M4X18	50
039	651016-4	SWITCH HPAHR2-2	950
041	911106-8	PAN HEAD SCREW M4X8	30
042	316487-9	HANDLE COVER	600
043	911126-2	PAN HEAD SCREW M4X16	30
044	911126-2	PAN HEAD SCREW M4X16	30
400	763429-8	CHUCK KEY	470
401	152492-0	GRIP 36 COMPLETE	230
402	122380-5	DEPTH ROD ASS'Y	530
403	924336-2	WING BOLT M6X25	100
404	286210-5	CAP 20	80
405	415065-3	KEY HOLDER 16	190

SERVICE DRAWING

MODEL NO. 6261DW

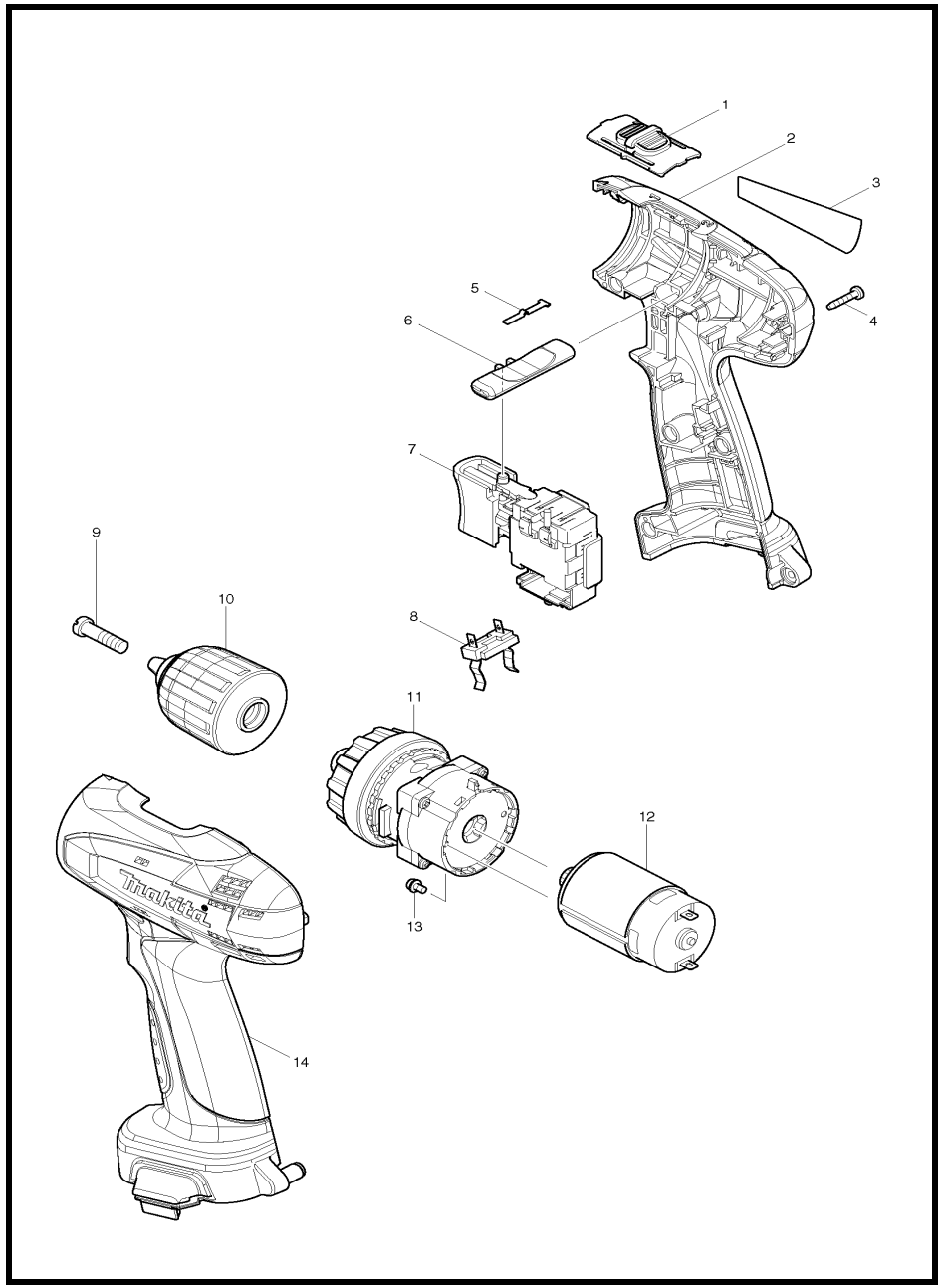

MODEL 6261DW

ITEM	PARTS ID	DESCRIPTION	PRICE/BAHT
001	125310-5	SPEED CHANGE LEVER ASS'Y	130
002	187299-5	HOUSING SET	750
004	266130-9	TAPPING SCREW BIND PT 3X16	30
005	232182-2	LEAF SPRING	80
006	450584-2	F/R CHANGE LEVER	50
007	650672-7	SWITCH TG563FSB-2	1,100
008	643909-9	BATTERY HOLDER	220
009	251468-5	- FLAT HEAD SCREW M6X22	100
010	766002-3	KEYLESS DRILL CHUCK 10	830
011	125482-6	GEAR ASS'Y	1,470
012	629815-2	DC MOTOR	880
013	911003-8	PAN HEAD SCREW M3X6	100
014	187299-5	HOUSING SET	750
A01	***DC1414	DC1414 BATTERY CHARGER	2,940
A02	192638-6	BATTERY 9120 SET	4,230
A03	414938-7	BATTERY COVER	50
A04	784636-0	+- BIT 2-65	160
A05	824852-3	PLASTIC CARRYING CASE	

SERVICE DRAWING

MODEL NO. 6271DW

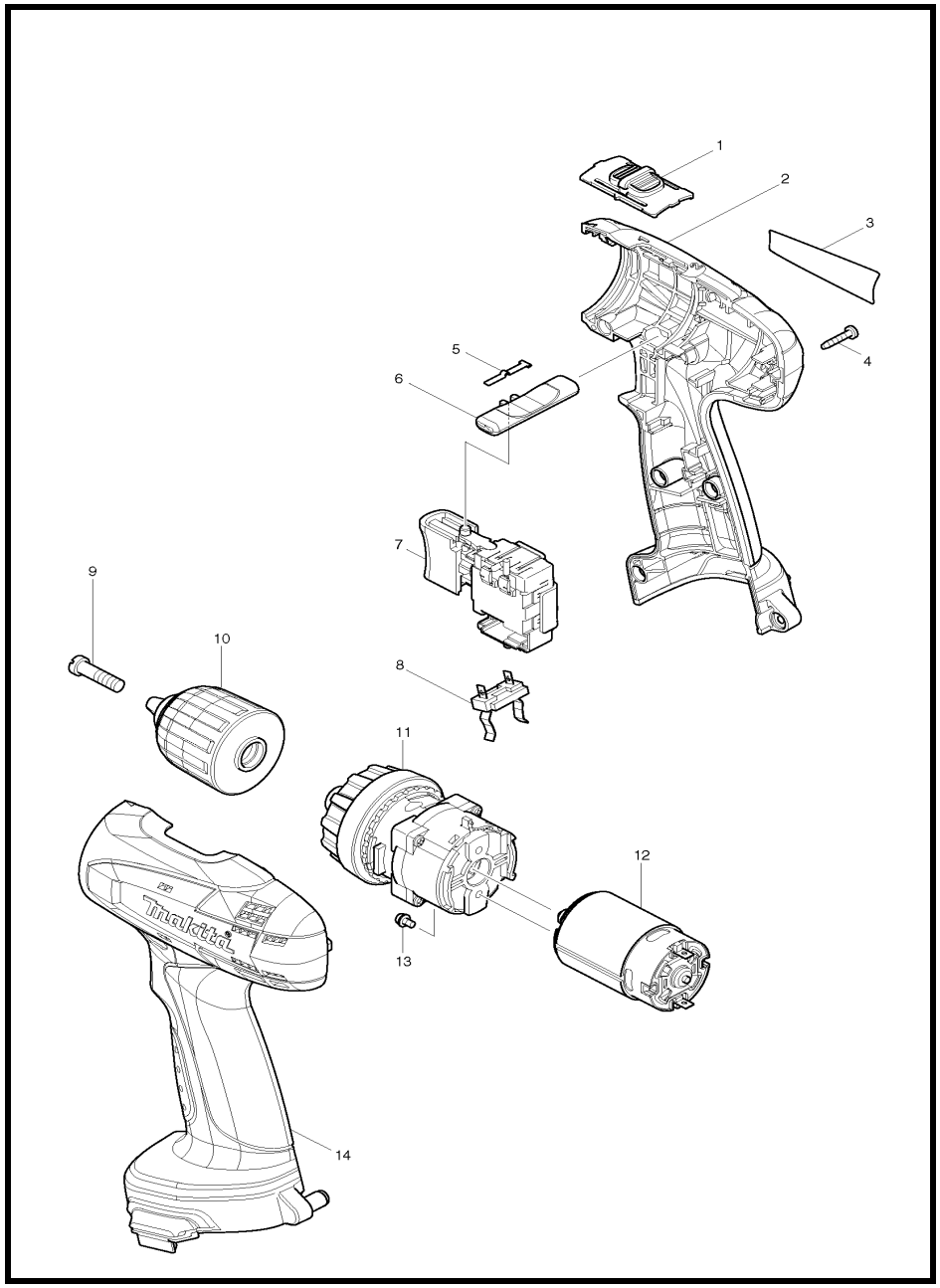

MODEL 6271DW

ITEM	PARTS ID	DESCRIPTION	PRICE/BAHT
001	125310-5	SPEED CHANGE LEVER ASS'Y	130
002	187300-6	HOUSING SET	720
004	266130-9	TAPPING SCREW BIND PT 3X16	30
005	232182-2	LEAF SPRING	80
006	450584-2	F/R CHANGE LEVER	50
007	650672-7	SWITCH TG563FSB-2	1,100
008	643909-9	BATTERY HOLDER	220
009	251468-5	- FLAT HEAD SCREW M6X22	100
010	766002-3	KEYLESS DRILL CHUCK 10	830
011	125482-6	GEAR ASS'Y	1,470
012	629817-8	DC MOTOR	880
013	911003-8	PAN HEAD SCREW M3X6	100
014	187300-6	HOUSING SET	720
A01	***DC1414	DC1414 BATTERY CHARGER	2,940
A02	192681-5	BATTERY 1220 SET	4,910
A03	414938-7	BATTERY COVER	50
A04	784636-0	+- BIT 2-65	160
A05	824852-3	PLASTIC CARRYING CASE	

SERVICE DRAWING

MODEL NO. 6281DW

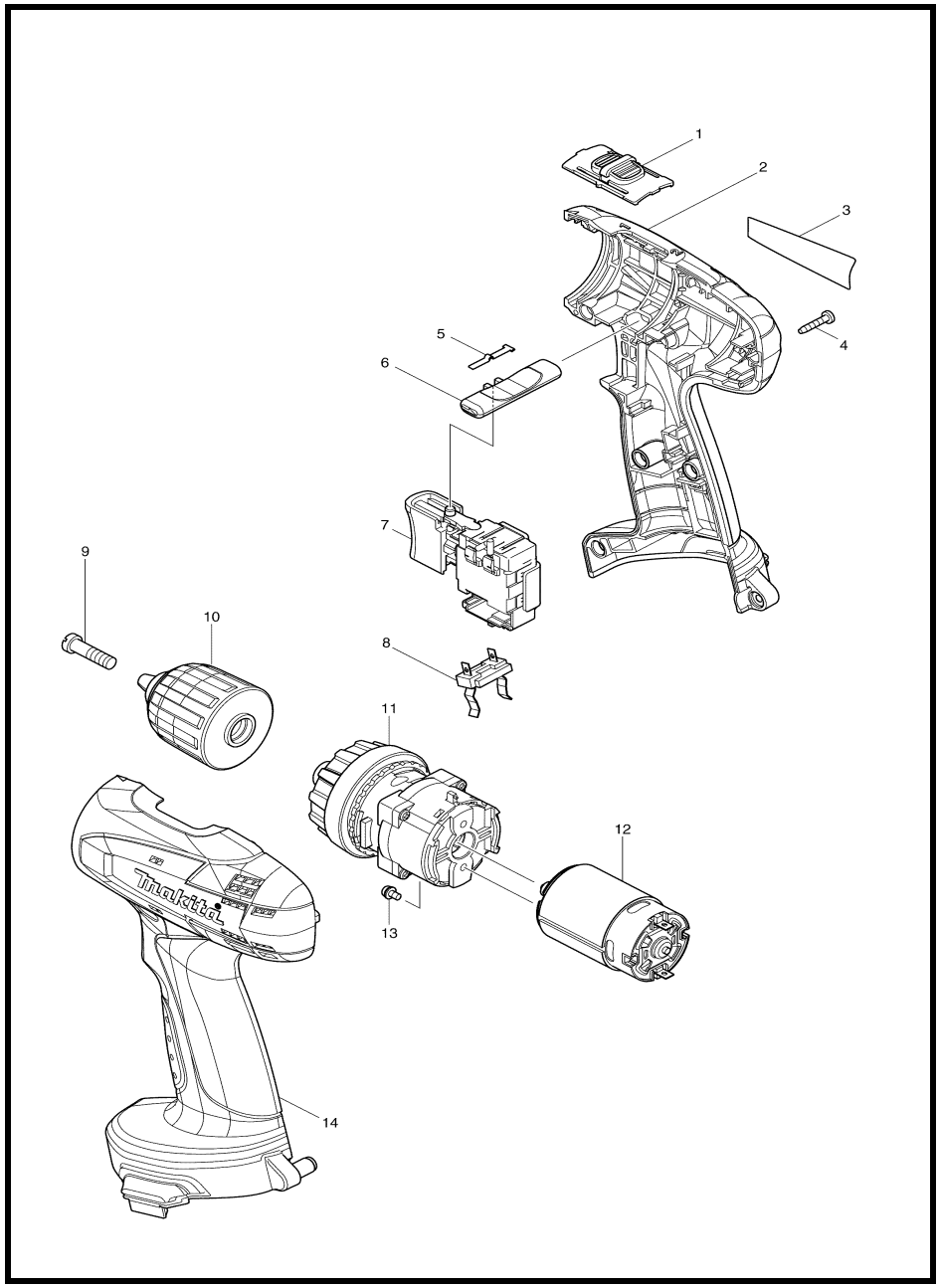

MODEL 6281DW

ITEM	PARTS ID	DESCRIPTION	PRICE/BAHT
001	125310-5	SPEED CHANGE LEVER ASS'Y	130
002	187301-4	HOUSING SET	730
004	266130-9	TAPPING SCREW BIND PT 3X16	30
005	232182-2	LEAF SPRING	80
006	450584-2	F/R CHANGE LEVER	50
007	650672-7	SWITCH TG563FSB-2	1,100
008	643909-9	BATTERY HOLDER	220
009	251468-5	- FLAT HEAD SCREW M6X22	100
010	766002-3	KEYLESS DRILL CHUCK 10	830
011	125482-6	GEAR ASS'Y	1,470
012	629819-4	DC MOTOR	820
013	911003-8	PAN HEAD SCREW M3X6	100
014	187301-4	HOUSING SET	730
A01	***DC1414	DC1414 BATTERY CHARGER	2,940
A02	193062-6	BATTERY 1420 SET	6,550
A03	414938-7	BATTERY COVER	50
A04	784636-0	+- BIT 2-65	160
A05	824852-3	PLASTIC CARRYING CASE	

SERVICE DRAWING

MODEL NO. 6300-4

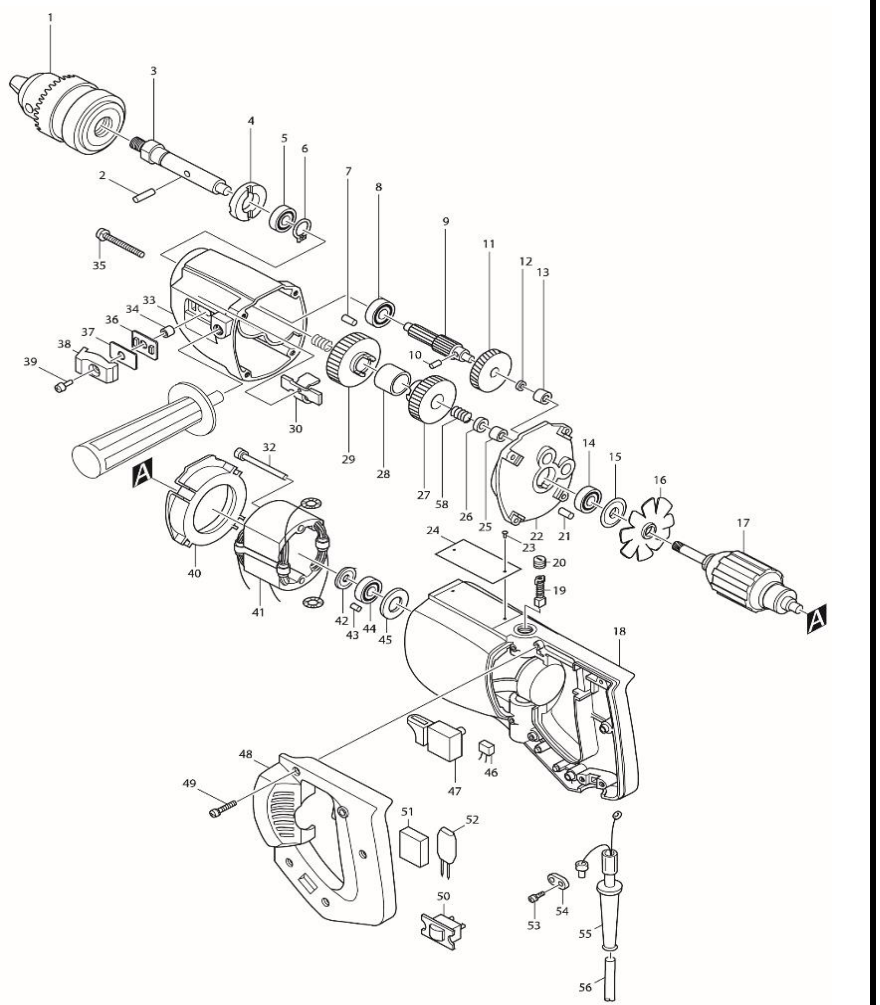

MODEL 6300-4

ITEM	PARTS ID	DESCRIPTION	PRICE/BAHT
001	192877-8	DRILL CHUCK S13	2,550
002	256021-2	PIN 5	110
003	335044-4	SPINDLE	1,400
004	285807-7	BEARING RETAINER 22-36	170
005	211206-7	BALL BEARING 6202LLB	460
006	961055-9	RETAINING RING S-15	50
007	263002-9	RUBBER PIN 4	30
008	211016-2	BALL BEARING 626LLB	320
009	221825-1	SPUR GEAR 7-13	1,350
010	256074-1	PIN 4	80
011	221619-4	HELICAL GEAR 43	730
012	253731-2	FLAT WASHER 8	70
013	212004-2	NEEDLE BEARING 810	290
014	211031-6	BALL BEARING 608LLB	190
015	213002-9	DUST SEAL 8	120
017	512638-4	ARMATURE ASS'Y 220V	
018	159087-0	MOTOR HOUSING	1,860
019	B-80232	CARBON BRUSH SET CB-51A	
020	643550-8	BRUSH HOLDER CAP 5-8	100
021	263002-9	RUBBER PIN 4	30
022	156976-0	GEAR HOUSING COVER	970
023	953106-2	RIVET 0-5	20
025	212004-2	NEEDLE BEARING 810	290
026	253731-2	FLAT WASHER 8	70
027	221824-3	SPUR GEAR 38	1,400
028	257538-8	SLEEVE 20	180
029	221823-5	SPUR GEAR 45	1,560
030	342482-3	SLIDER	270
032	911275-5	PAN HEAD SCREW M5X50	80
033	156913-4	GEAR HOUSING COMPLETE	2,400
034	257539-6	SLEEVE 5	120
035	911261-6	PAN HEAD SCREW M5X40	50
036	343286-6	SET SPRING	50
037	232045-2	LEAF SPRING	80
038	411344-7	GEAR SWITCH BUTTON	230
039	911215-3	PAN HEAD SCREW M5X12	70
040	411234-4	BAFFLE PLATE	160
042	681613-2	INSULATION WASHER	80
043	263014-2	RUBBER PIN 4	40
044	211031-6	BALL BEARING 608LLB	190
045	253192-6	FLAT WASHER 14	70
047	650224-4	SWITCH SGEL115CDY-10	360
048	419468-3	HANDLE COVER	390
049	911153-9	PAN HEAD SCREW M4X28	30
050	651600-5	SWITCH SS106A	390
051	685718-0	SPONGE SHEET	50
052	631011-0	DIODE S3V60ZM-H	1,130
053	911133-5	PAN HEAD SCREW M4X18	50
054	687001-1	STRAIN RELIEF	50
055	682504-0	CORD GUARD 10-85	190
056	691015-4	POWER SUPPLY CORD 0.75-2-2.5	740
058	231232-0	COMPRESSION SPRING 14	80

ITEM	PARTS ID	DESCRIPTION	PRICE/BAHT
401	152492-0	GRIP 36 COMPLETE	230

SERVICE DRAWING

MODEL NO. 6300LR

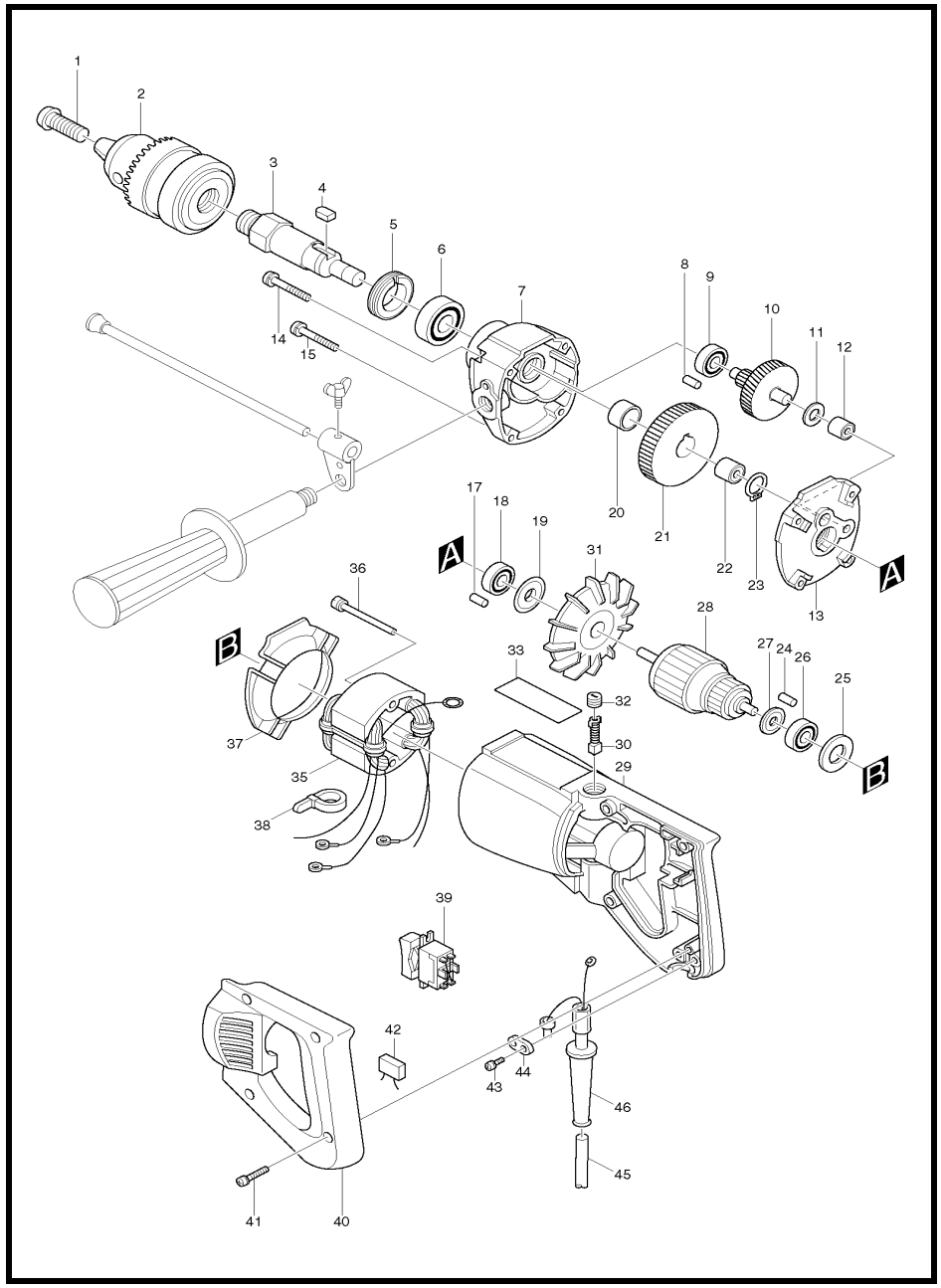

MODEL 6300LR

ITEM	PARTS ID	DESCRIPTION	PRICE/BAHT
001	265325-1	HEX. SOCKET HEAD BOLT M6X22	90
002	192877-8	DRILL CHUCK S13	2,550
003	325494-1	SPINDLE	1,260
004	254211-1	KEY 5	80
005	285808-5	BEARING RETAINER 25-36	170
006	211206-7	BALL BEARING 6202LLB	460
007	156974-4	GEAR HOUSING	2,220
008	263002-9	RUBBER PIN 4	30
009	211016-2	BALL BEARING 626LLB	320
010	226028-2	GEAR COMPLETE 7-41	1,140
011	261008-1	FIBER WASHER 6	30
012	212012-3	NEEDLE BEARING 609	320
013	156973-6	GEAR HOUSING COVER	1,140
014	911276-3	PAN HEAD SCREW M5X55	90
015	911256-9	PAN HEAD SCREW M5X35	40
017	263002-9	RUBBER PIN 4	30
018	211031-6	BALL BEARING 608LLB	190
019	213002-9	DUST SEAL 8	120
020	257018-4	RING 15	150
021	221261-1	SPUR GEAR 47	720
022	961054-1	RETAINING RING S-14	30
023	212003-4	NEEDLE BEARING 810	290
024	263002-9	RUBBER PIN 4	30
025	253192-6	FLAT WASHER 14	70
026	211031-6	BALL BEARING 608LLB	190
027	681613-2	INSULATION WASHER	80
028	512559-0	ARMATURE ASS'Y 220V	
029	156425-7	MOTOR HOUSING	1,750
030	B-80232	CARBON BRUSH SET CB-51A	
032	643550-8	BRUSH HOLDER CAP 5-8	100
033	815027-5	NAME PLATE 6300LR	100
035	522399-8	FIELD ASS'Y 220V	
036	911275-5	PAN HEAD SCREW M5X50	80
037	411399-2	BAFFLE PLATE	150
038	687010-0	BAND	30
039	651564-3	SWITCH SL220SD-4	1,250
040	411417-6	HANDLE COVER	410
041	911153-9	PAN HEAD SCREW M4X28	30
043	911133-5	PAN HEAD SCREW M4X18	50
044	687001-1	STRAIN RELIEF	50
045	691015-4	POWER SUPPLY CORD 0.75-2-2.5	740
046	682504-0	CORD GUARD 10-85	190
400	763432-9	CHUCK KEY S13	230
401	152892-4	GRIP COMPLETE	690

SERVICE DRAWING

MODEL NO. 6300NB

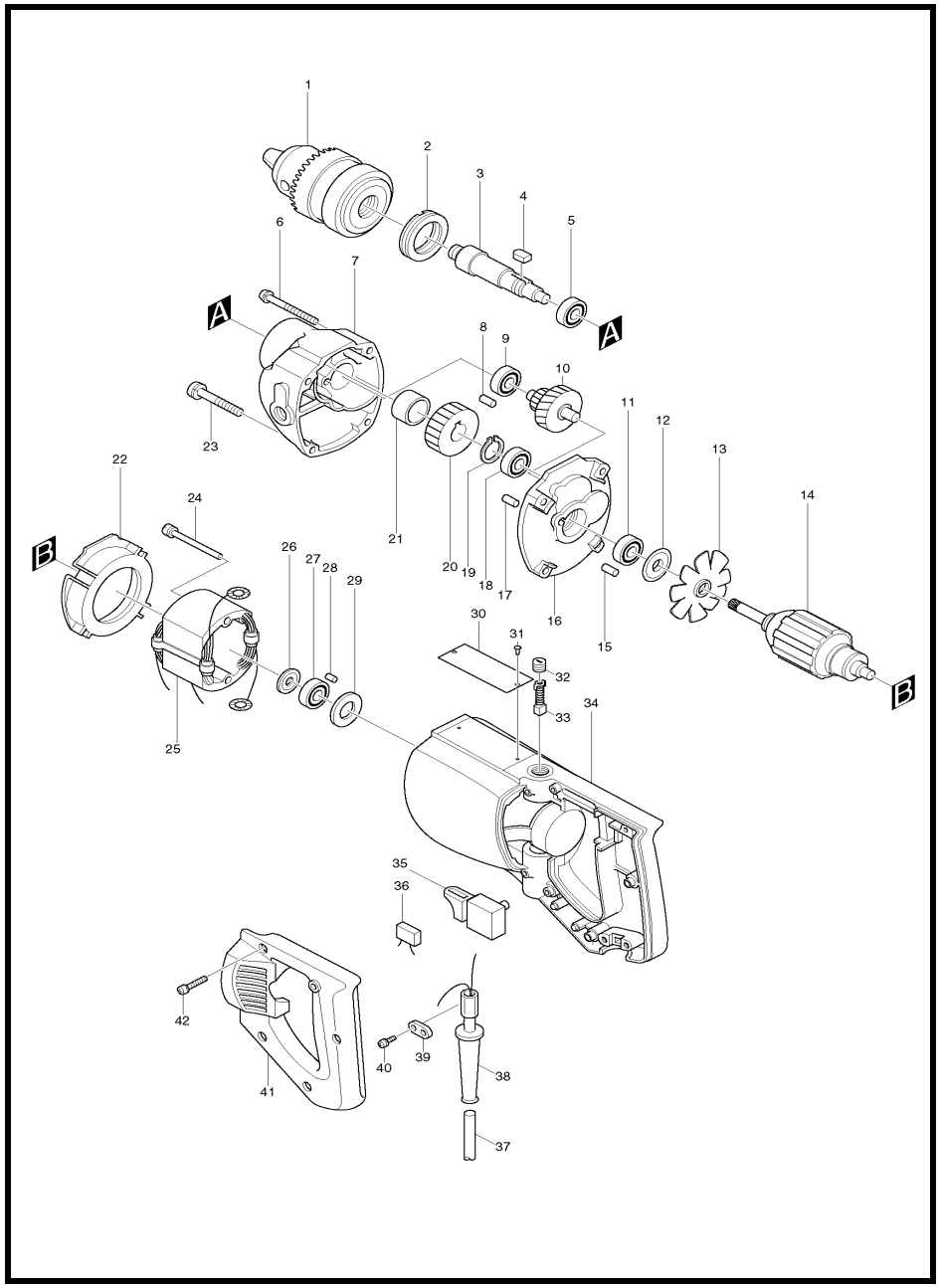

MODEL 6300NB

ITEM	PARTS ID	DESCRIPTION	PRICE/BAHT
001	192877-8	DRILL CHUCK S13	2,550
002	285806-9	BEARING RETAINER 19-36	160
003	325547-6	SPINDLE	1,160
004	254211-1	KEY 5	80
005	211206-7	BALL BEARING 6202LLB	460
006	911266-6	PAN HEAD SCREW M5X45	50
007	156975-2	GEAR HOUSING	1,610
008	263002-9	RUBBER PIN 4	30
009	211031-6	BALL BEARING 608LLB	190
010	226012-7	GEAR COMPLETE 13-41	1,460
011	211031-6	BALL BEARING 608LLB	190
012	213002-9	DUST SEAL 8	120
013	241015-0	FAN 68	250
014	512638-4	ARMATURE ASS'Y 220V	
015	263002-9	RUBBER PIN 4	30
016	156436-2	GEAR HOUSING COVER	1,350
017	263002-9	RUBBER PIN 4	30
018	211031-6	BALL BEARING 608LLB	190
019	961054-1	RETAINING RING S-14	30
020	221019-8	SPUR GEAR 38	720
021	257018-4	RING 15	150
022	411234-4	BAFFLE PLATE	160
023	911256-9	PAN HEAD SCREW M5X35	40
024	911275-5	PAN HEAD SCREW M5X50	80
025	522265-9	FIELD ASS'Y 220V	
026	681613-2	INSULATION WASHER	80
027	211031-6	BALL BEARING 608LLB	190
028	263002-9	RUBBER PIN 4	30
029	253192-6	FLAT WASHER 14	70
031	953106-2	RIVET 0-5	20
032	643550-8	BRUSH HOLDER CAP 5-8	100
033	B-80232	CARBON BRUSH SET CB-51A	
034	159087-0	MOTOR HOUSING	1,860
035	650224-4	SWITCH SGEL115CDY-10	360
037	691015-4	POWER SUPPLY CORD 0.75-2-2.5	740
038	682504-0	CORD GUARD 10-85	190
039	687001-1	STRAIN RELIEF	50
040	911133-5	PAN HEAD SCREW M4X18	50
041	419512-6	HANDLE COVER	400
042	911153-9	PAN HEAD SCREW M4X28	30
400	152492-0	GRIP 36 COMPLETE	230
402	410102-8	KEY HOLDER	80

SERVICE DRAWING

MODEL NO. 6301

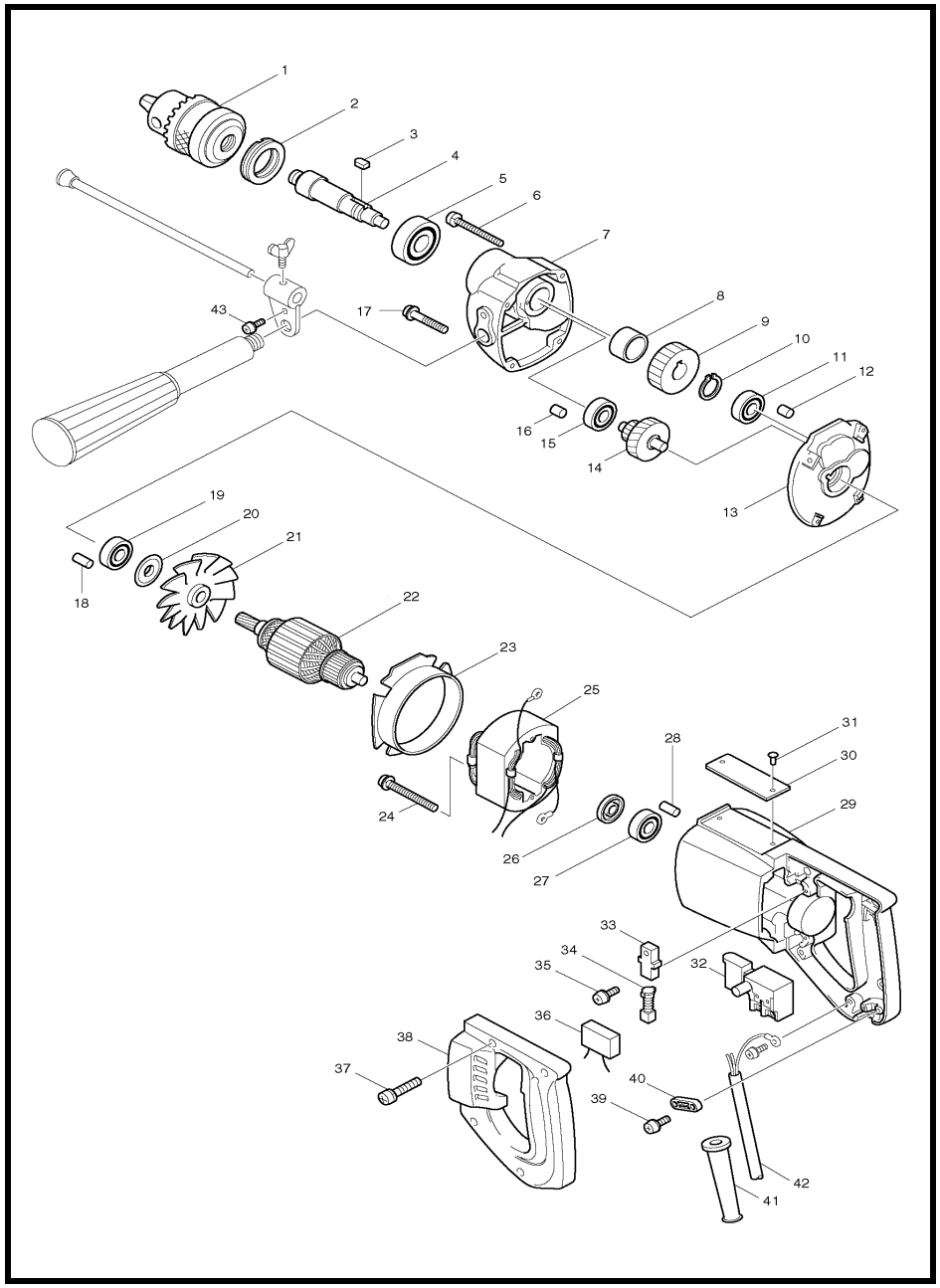

MODEL 6301

ITEM	PARTS ID	DESCRIPTION	PRICE/BAHT
001	192877-8	DRILL CHUCK S13	2,550
002	285806-9	BEARING RETAINER 19-36	160
003	254211-1	KEY 5	80
004	325547-6	SPINDLE	1,160
005	211206-7	BALL BEARING 6202LLB	460
006	911261-6	PAN HEAD SCREW M5X40	50
007	156978-6	GEAR HOUSING	1,590
008	257018-4	RING 15	150
009	221019-8	SPUR GEAR 38	720
010	961054-1	RETAINING RING S-14	30
011	211031-6	BALL BEARING 608LLB	190
012	263002-9	RUBBER PIN 4	30
013	156436-2	GEAR HOUSING COVER	1,350
014	226012-7	GEAR COMPLETE 13-41	1,460
015	211031-6	BALL BEARING 608LLB	190
016	263002-9	RUBBER PIN 4	30
017	911251-9	PAN HEAD SCREW M5X30	50
018	263002-9	RUBBER PIN 4	30
019	211031-6	BALL BEARING 608LLB	190
020	213002-9	DUST SEAL 8	120
022	512653-8	ARMATURE ASS'Y 220V	
023	341438-3	BAFFLE PLATE	150
024	911275-5	PAN HEAD SCREW M5X50	80
025	522458-8	FIELD ASS'Y 220V	
026	213002-9	DUST SEAL 8	120
027	211031-6	BALL BEARING 608LLB	190
028	263002-9	RUBBER PIN 4	30
029	159234-3	MOTOR HOUSING	2,710
031	953106-2	RIVET 0-5	20
032	651240-9	SWITCH SGEL115CD	610
033	643605-9	BRUSH HOLDER	100
035	911114-9	PAN HEAD SCREW M4X10	30
037	911146-6	PAN HEAD SCREW M4X25	20
038	316387-3	HANDLE COVER	750
039	911133-5	PAN HEAD SCREW M4X18	50
040	687053-2	STRAIN RELIEF	70
041	682505-8	CORD GUARD 10-90	150
042	691134-6	POWER SUPPLY CORD 0.75-3-2.5	1,010
043	911206-4	PAN HEAD SCREW M5X10	20
400	256828-6	ROD 8	250
401	924306-1	WING BOLT M6X10	100
402	164187-3	STOPPER HOLDER	470
404	273519-4	GRIP 37	440
407	410102-8	KEY HOLDER	80
408	286210-5	CAP 20	80

SERVICE DRAWING

MODEL NO. 6401

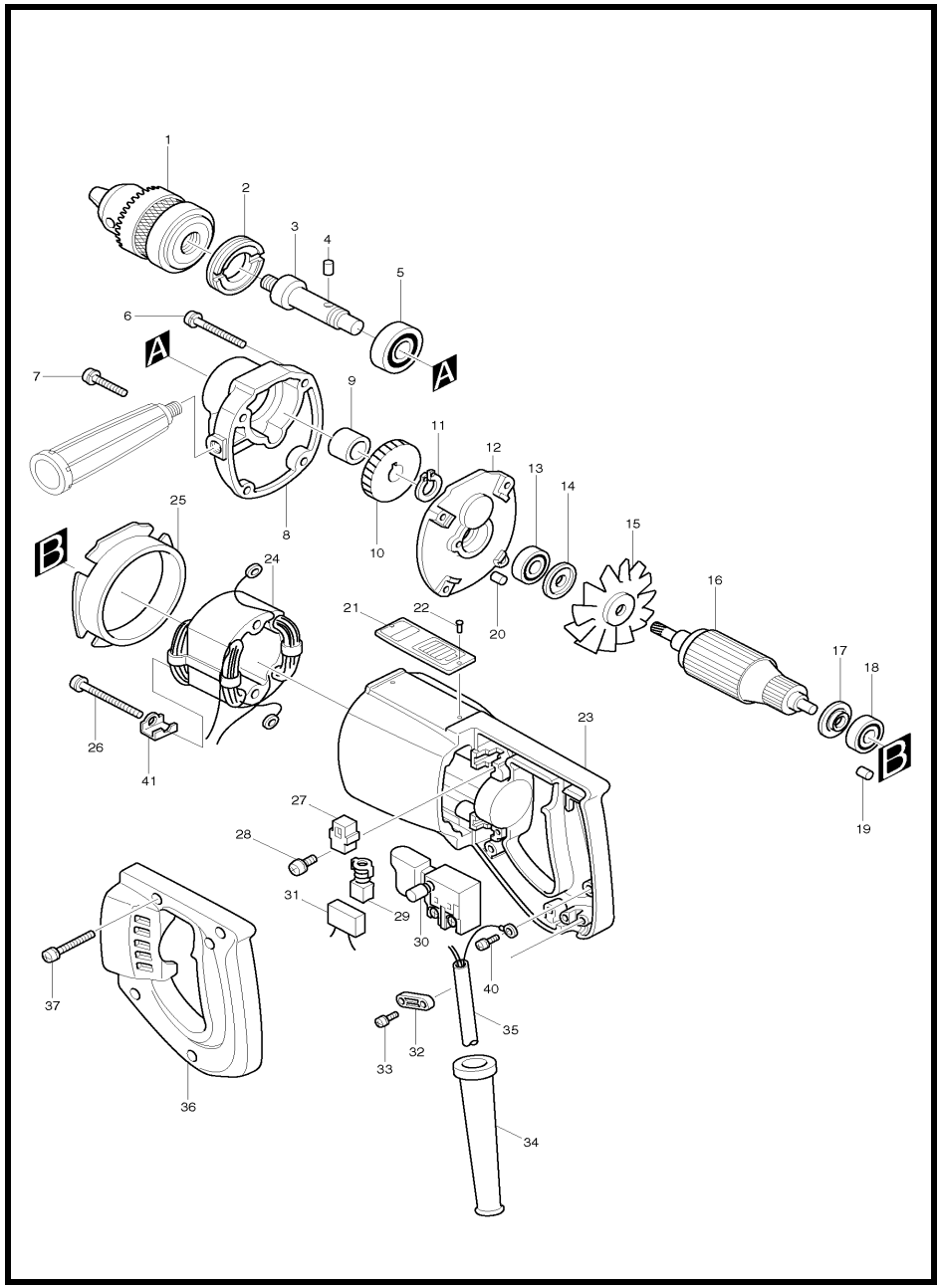

MODEL 6401

ITEM	PARTS ID	DESCRIPTION	PRICE/BAHT
001	192879-4	DRILL CHUCK	1,770
002	285802-7	BEARING RETAINER 19-33	170
003	323676-9	SPINDLE	1,090
004	256009-2	PIN 4.5	80
005	211106-1	BALL BEARING 6201LLB	400
006	911256-9	PAN HEAD SCREW M5X35	40
007	911251-9	PAN HEAD SCREW M5X30	50
008	312971-2	GEAR HOUSING	1,400
009	257513-4	SLEEVE 12	130
010	221020-3	HELICAL GEAR 52	750
011	961052-5	RETAINING RING S-12	40
012	156435-4	GEAR HOUSING COVER	950
013	211031-6	BALL BEARING 608LLB	190
014	213002-9	DUST SEAL 8	120
016	512658-8	ARMATURE ASS'Y 220V	
017	213002-9	DUST SEAL 8	120
018	211031-6	BALL BEARING 608LLB	190
019	263002-9	RUBBER PIN 4	30
020	263002-9	RUBBER PIN 4	30
021	815257-8	NAME PLATE 6401	150
022	953106-2	RIVET 0-5	20
023	159234-3	MOTOR HOUSING	2,710
024	594093-2	FIELD ASS'Y 220V	
025	341438-3	BAFFLE PLATE	150
026	911265-8	PAN HEAD SCREW M5X40	80
027	643605-9	BRUSH HOLDER	100
028	911114-9	PAN HEAD SCREW M4X10	30
029	B-80313	CARBON BRUSH SET CB-106A	
030	651242-5	SWITCH SGEL106C-1	420
032	687053-2	STRAIN RELIEF	70
033	911133-5	PAN HEAD SCREW M4X18	50
034	682505-8	CORD GUARD 10-90	150
035	691134-6	POWER SUPPLY CORD 0.75-3-2.5	1,010
036	316387-3	HANDLE COVER	750
037	911146-6	PAN HEAD SCREW M4X25	20
040	652014-1	PAN HEAD SCREW M4X8	30
041	343657-7	RETAINER	80
400	152491-2	GRIP 36 COMPLETE	230
401	763415-9	CHUCK KEY S10	230
402	411780-7	KEY HOLDER 10	50

SERVICE DRAWING

MODEL NO. 6409

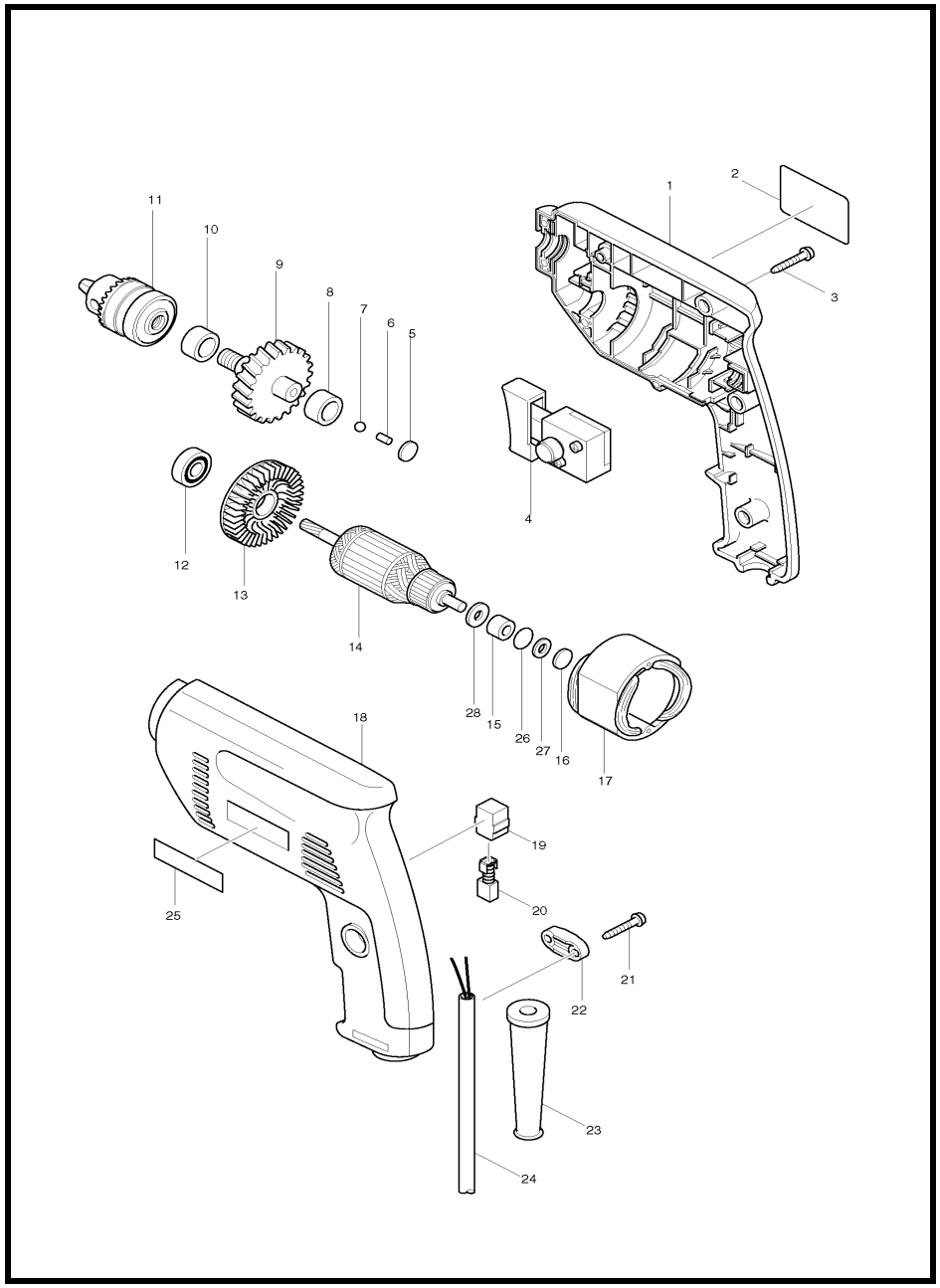

MODEL 6409

ITEM	PARTS ID	DESCRIPTION	PRICE/BAHT
001	182903-1	HOUSING SET	1,290
002	858921-8	NAME PLATE 6409	80
003	265995-6	TAPPING SCREW 4X18	40
004	651260-3	SWITCH	860
005	344418-8	PLATE 12	50
006	256251-5	PIN 4	60
007	216001-0	STEEL BALL 3.5	20
008	214114-1	PLANE BEARING 12	100
009	193050-3	GEAR COMPLETE REPAIR SET	800
010	214114-1	PLANE BEARING 12	100
011	192970-8	DRILL CHUCK	870
012	211033-2	BALL BEARING 608LB	200
014	517183-4	ARMATURE ASS'Y 220V	
015	214014-5	PLANE BEARING 6	80
016	344418-8	PLATE 12	50
017	521653-7	FIELD ASS'Y 220/240V	
018	182903-1	HOUSING SET	1,290
019	643552-4	BRUSH HOLDER 5-8	100
020	B-80254	CARBON BRUSH SET CB-64A	
021	265995-6	TAPPING SCREW 4X18	40
022	687052-4	STRAIN RELIEF	80
023	682502-4	CORD GUARD 8-85	110
024	691055-2	POWER SUPPLY CORD 0.75-2-2.0	1,100
025	819063-3	MAKITA LABEL	30
026	213105-9	O RING 11	30
027	443103-1	FELT RING 6	50
028	261008-1	FIBER WASHER 6	30
A01	411780-7	KEY HOLDER 10	50
A02	763418-3	CHUCK KEY S10	150

SERVICE DRAWING

MODEL NO. 6410

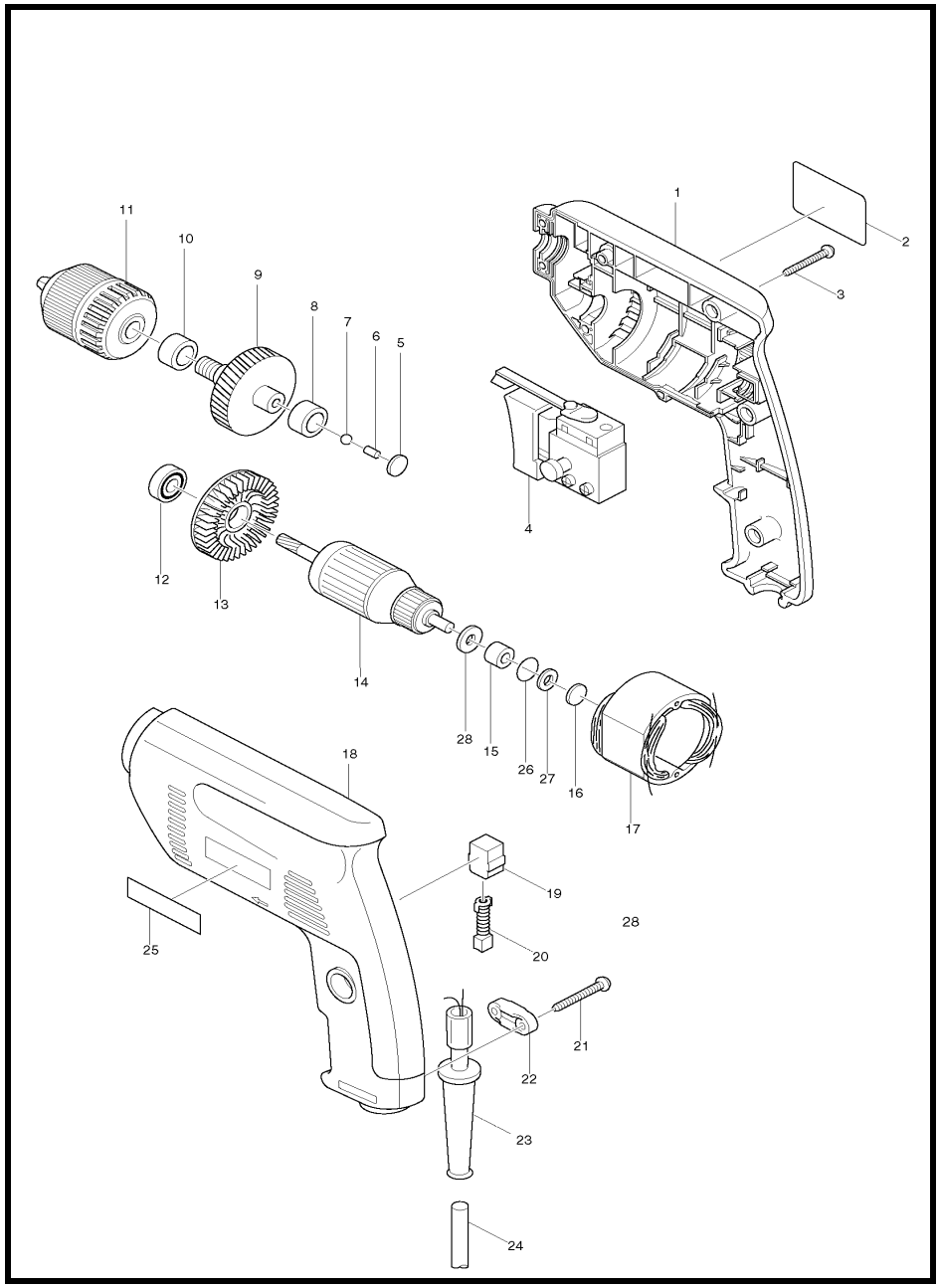

MODEL 6410

ITEM	PARTS ID	DESCRIPTION	PRICE/BAHT
001	182904-9	HOUSING SET	1,280
002	858922-6	NAME PLATE 6410	80
003	265995-6	TAPPING SCREW 4X18	40
004	651986-7	SWITCH TG803TLB-1	1,480
005	344418-8	PLATE 12	50
006	256251-5	PIN 4	60
007	216001-0	STEEL BALL 3.5	20
008	214114-1	PLANE BEARING 12	100
009	193050-3	GEAR COMPLETE REPAIR SET	800
010	214114-1	PLANE BEARING 12	100
011	192016-0	KEYLESS DRILL CHUCK 10	1,690
012	211033-2	BALL BEARING 608LB	200
014	517183-4	ARMATURE ASS'Y 220V	
015	214014-5	PLANE BEARING 6	80
016	344418-8	PLATE 12	50
017	621658-8	FIELD 220/240V	
018	182904-9	HOUSING SET	1,280
019	643552-4	BRUSH HOLDER 5-8	100
020	B-80254	CARBON BRUSH SET CB-64A	
021	265995-6	TAPPING SCREW 4X18	40
022	687052-4	STRAIN RELIEF	80
023	682502-4	CORD GUARD 8-85	110
024	691055-2	POWER SUPPLY CORD 0.75-2-2.0	1,100
025	819063-3	MAKITA LABEL	30
026	213105-9	O RING 11	30
027	443103-1	FELT RING 6	50
028	261008-1	FIBER WASHER 6	30

SERVICE DRAWING

MODEL NO. 6412

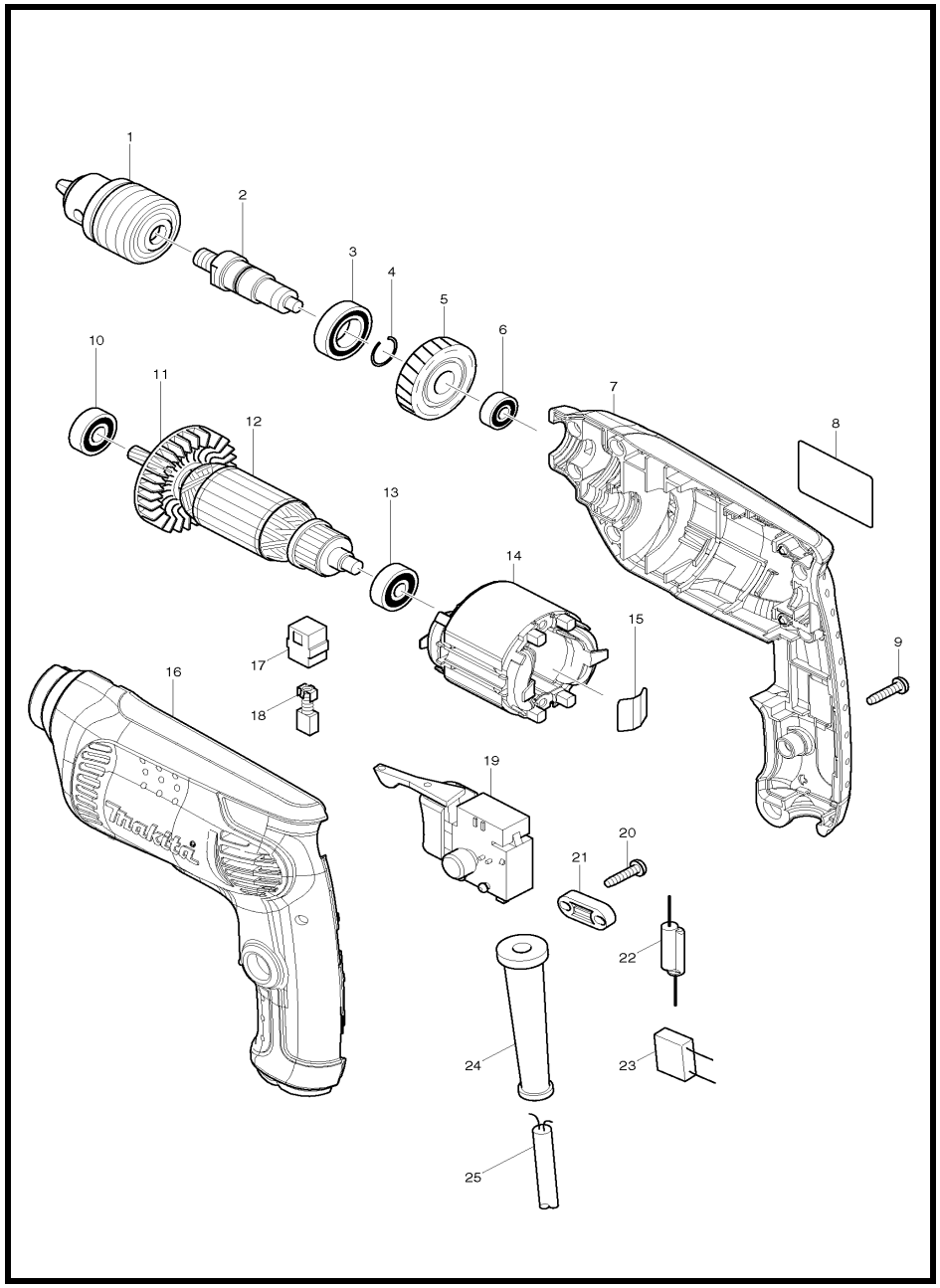

MODEL 6412

ITEM	PARTS ID	DESCRIPTION	PRICE/BAHT
001	193706-8	DRILL CHUCK S10	650
002	324376-4	SPINDLE	250
003	211242-3	BALL BEARING 6902ZZ	170
004	233925-5	RING SPRING 13	70
005	226578-7	HELICAL GEAR 35	280
006	210028-2	BALL BEARING 606ZZ	130
007	188277-8	HOUSING SET	960
008	863394-2	6412 NAME PLATE	80
009	266326-2	TAPPING SCREW 4X18	30
010	211032-4	BALL BEARING 608ZZ	200
012	515698-5	ARMATURE ASS'Y 220V	
013	210030-5	BALL BEARING 627ZZ	150
014	593643-0	FIELD ASS'Y 220V	
015	232210-3	LEAF SPRING	110
016	188277-8	HOUSING SET	960
017	643563-9	BRUSH HOLDER 5X8	90
018	B-80254	CARBON BRUSH SET CB-64A	
019	650586-0	SWITCH DGQ-1104H	880
020	266326-2	TAPPING SCREW 4X18	30
021	687124-5	STRAIN RELIEF	70
024	682569-2	CORD GUARD 8-85	110
025	691055-2	POWER SUPPLY CORD 0.75-2-2.0	1,100
A01	418163-2	KEY HOLDER 10	60
A02	763444-2	CHUCK KEY S10	150

SERVICE DRAWING

MODEL NO. 6413

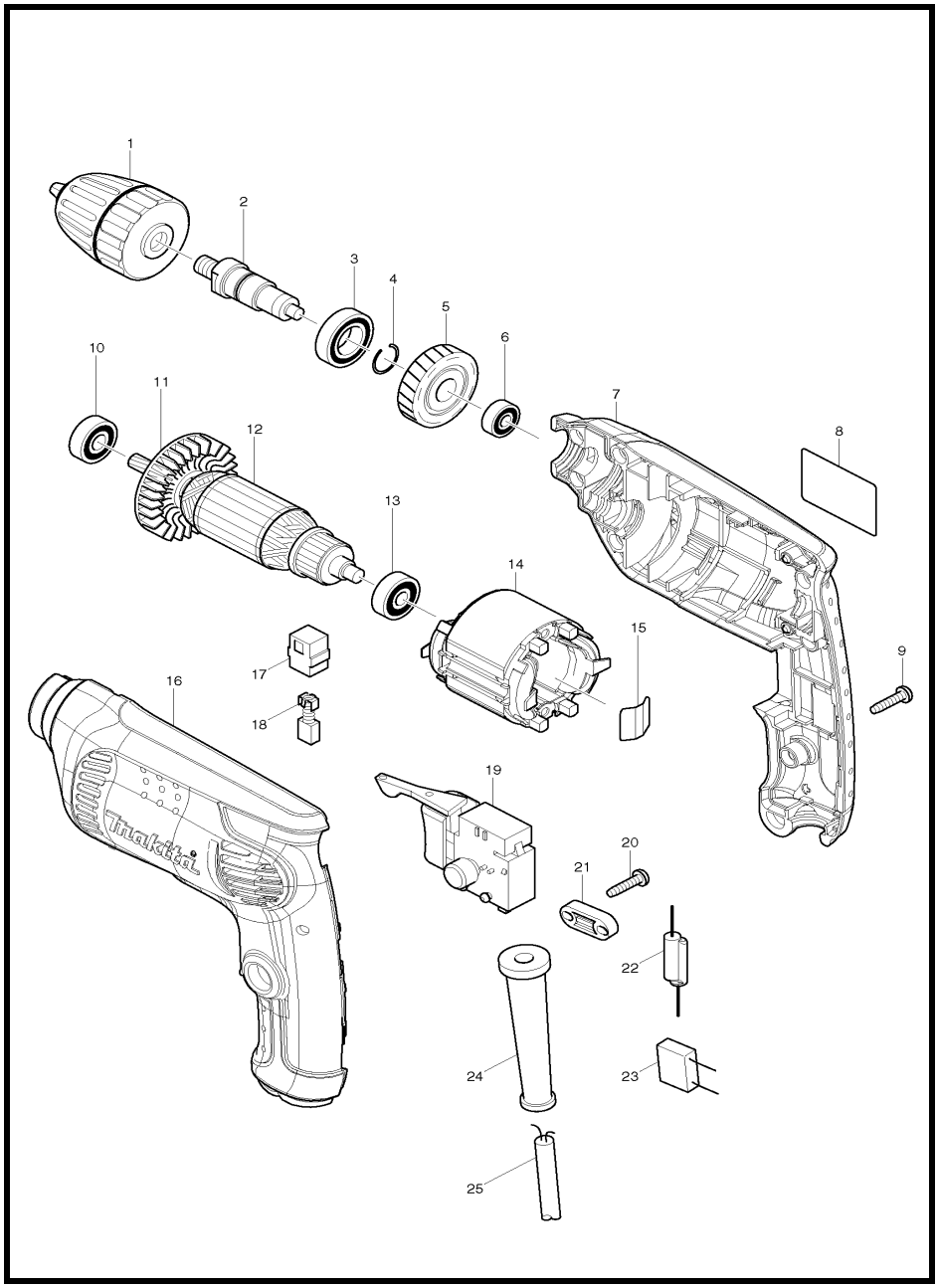

MODEL 6413

ITEM	PARTS ID	DESCRIPTION	PRICE/BAHT
001	763180-0	KEYLESS DRILL CHUCK 10	700
002	324376-4	SPINDLE	250
003	211242-3	BALL BEARING 6902ZZ	170
004	233925-5	RING SPRING 13	70
005	226578-7	HELICAL GEAR 35	280
006	210028-2	BALL BEARING 606ZZ	130
007	188277-8	HOUSING SET	960
008	863402-9	6413 NAME PLATE	80
009	266326-2	TAPPING SCREW 4X18	30
010	211032-4	BALL BEARING 608ZZ	200
012	515698-5	ARMATURE ASS'Y 220V	
013	210030-5	BALL BEARING 627ZZ	150
014	593643-0	FIELD ASS'Y 220V	
015	232210-3	LEAF SPRING	110
016	188277-8	HOUSING SET	960
017	643563-9	BRUSH HOLDER 5X8	90
018	B-80254	CARBON BRUSH SET CB-64A	
019	650586-0	SWITCH DGQ-1104H	880
020	266326-2	TAPPING SCREW 4X18	30
021	687124-5	STRAIN RELIEF	70
024	682569-2	CORD GUARD 8-85	110
025	691055-2	POWER SUPPLY CORD 0.75-2-2.0	1,100

SERVICE DRAWING

MODEL NO. 6501

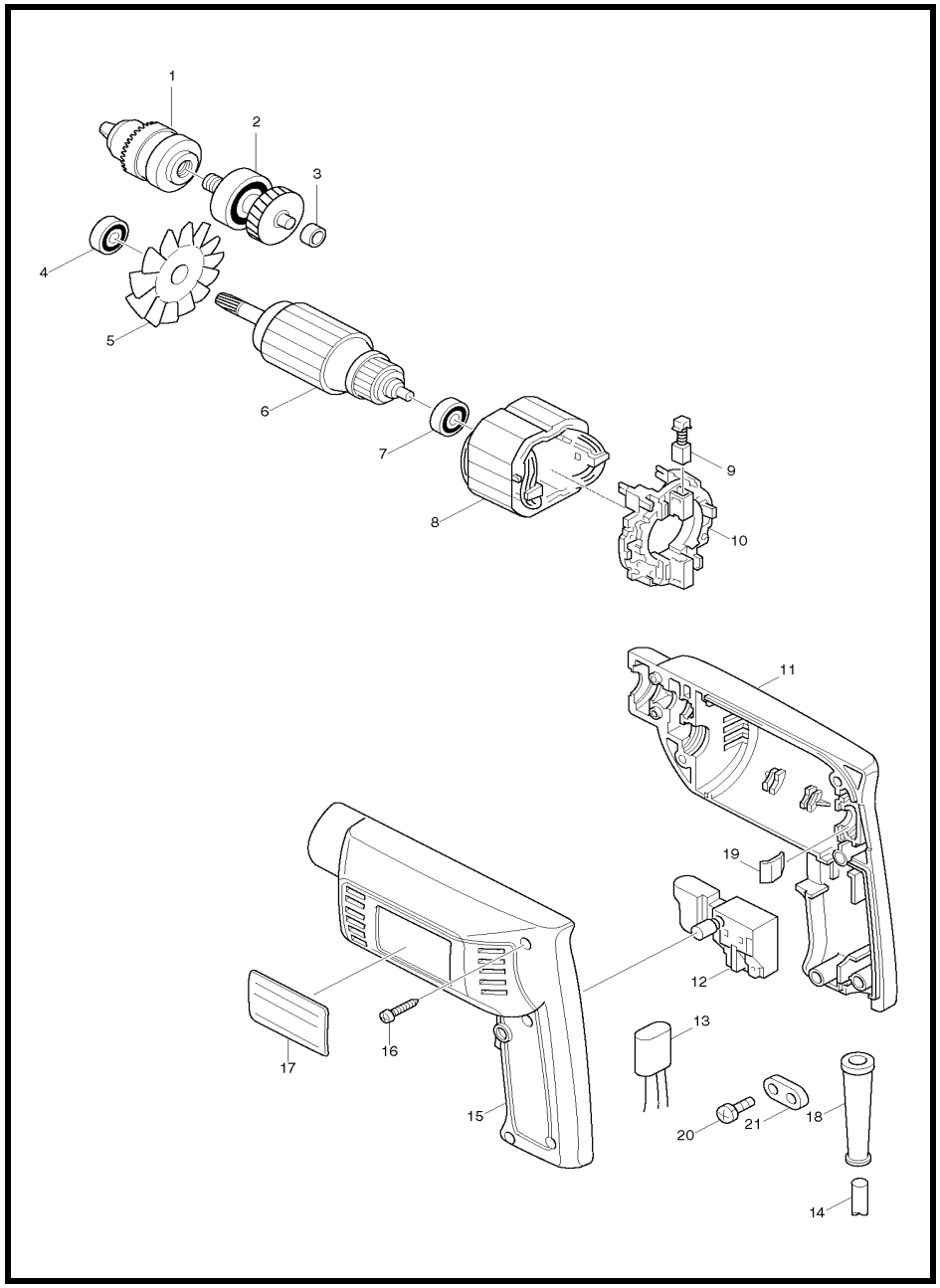

MODEL 6501

ITEM	PARTS ID	DESCRIPTION	PRICE/BAHT
001	192887-5	DRILL CHUCK	1,050
002	153178-9	GEAR COMPLETE	1,340
003	214017-9	PLANE BEARING 5	80
004	211016-2	BALL BEARING 626LLB	320
006	517033-3	ARMATURE ASS'Y 220V	
007	211016-2	BALL BEARING 626LLB	320
008	633033-6	FIELD 220V	
009	B-80276	CARBON BRUSH SET CB-70A	
010	632073-1	TERMINAL BASE COMPLETE 55C	470
011	183209-0	HOUSING SET	1,270
012	650223-6	SWITCH SGEL115CD-4	390
014	691055-2	POWER SUPPLY CORD 0.75-2-2.0	1,100
015	183209-0	HOUSING SET	1,270
016	265874-8	TAPPING SCREW BT 4X20	30
017	856067-4	NAME PLATE 6501	80
018	682502-4	CORD GUARD 8-85	110
019	232100-0	LEAF SPRING	100
020	265995-6	TAPPING SCREW 4X18	40
021	687052-4	STRAIN RELIEF	80
404	763418-3	CHUCK KEY S10	150
405	411780-7	KEY HOLDER 10	50

SERVICE DRAWING

MODEL NO. 6700N

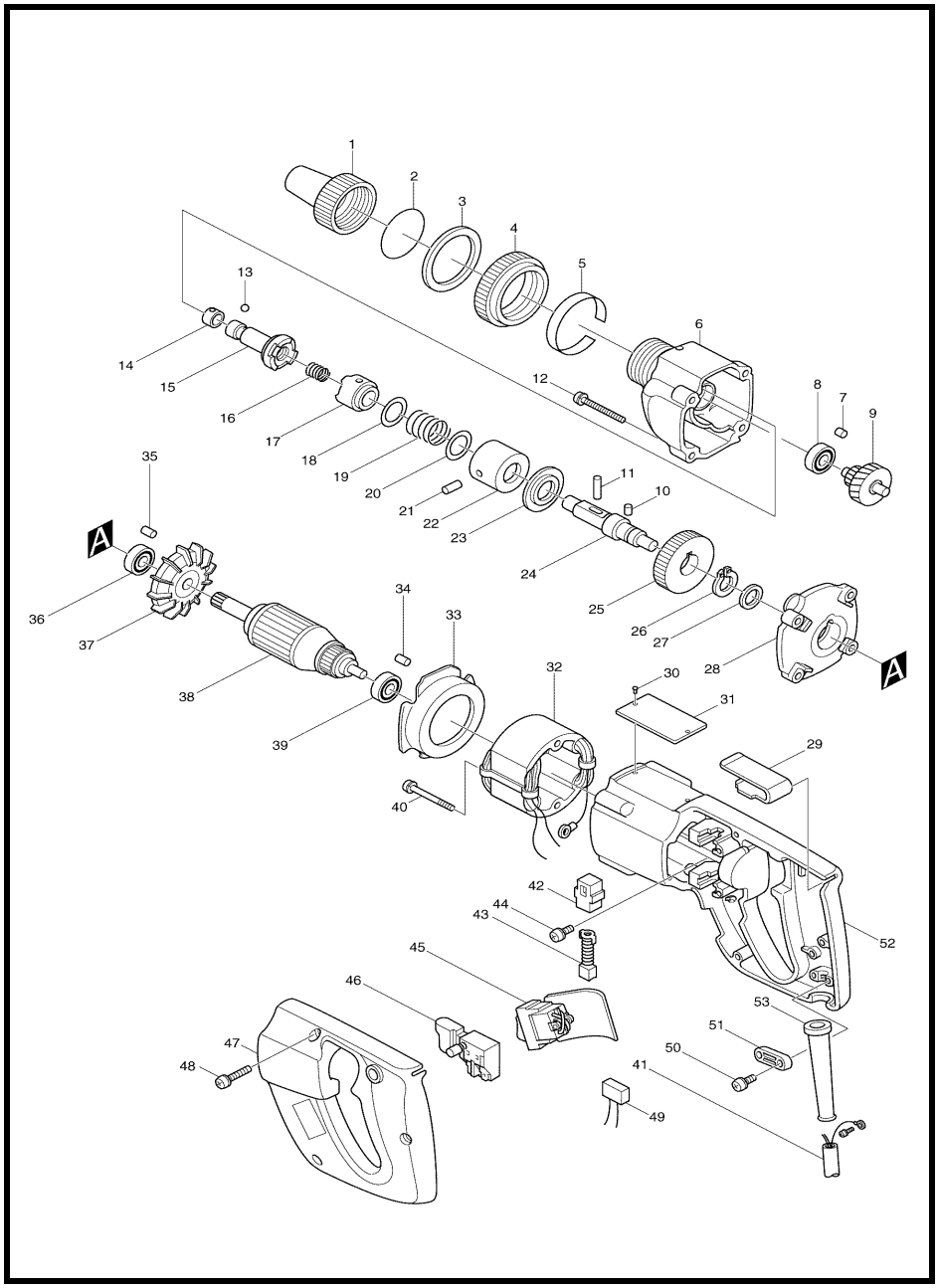

MODEL 6700N

ITEM	PARTS ID	DESCRIPTION	PRICE/BAHT
001	321198-3	CLUTCH COVER	1,710
002	213458-6	O RING 34	50
003	253806-7	FLAT WASHER 36	150
004	321200-2	RING 36	1,240
005	816043-0	INDICATION LABEL	80
006	156623-3	GEAR HOUSING	1,520
007	263002-9	RUBBER PIN 4	30
008	211016-2	BALL BEARING 626LLB	320
009	226016-9	GEAR COMPLETE 9-39	1,370
010	256009-2	PIN 4.5	80
011	256100-6	PIN 5	110
012	911161-0	PAN HEAD SCREW M4X35	30
013	216001-0	STEEL BALL 3.5	20
014	232050-9	LEAF SPRING	50
015	133456-3	SPINDLE	1,050
016	231278-6	COMPRESSION SPRING 6	70
017	223042-9	CLUTCH CAM	690
018	253326-1	THIN WASHER 16	80
019	231279-4	COMPRESSION SPRING 15	100
020	253326-1	THIN WASHER 16	80
021	256180-2	PIN 3	40
022	321201-0	SLEEVE	390
023	341559-1	WASHER 14	170
024	321199-1	DRIVING SHAFT	1,050
025	221023-7	SPUR GEAR 54	830
026	961052-5	RETAINING RING S-12	40
027	253804-1	FLAT WASHER 6	40
028	156622-5	GEAR HOUSING COVER	1,040
029	341558-3	HOOK	230
030	953106-2	RIVET 0-5	20
031	815483-9	NAME PLATE 6700N	120
032	521393-7	FIELD ASS'Y 220V	
033	341557-5	BAFFLE PLATE	210
034	263002-9	RUBBER PIN 4	30
035	263002-9	RUBBER PIN 4	30
036	210025-8	BALL BEARING 627LLB	250
038	511408-8	ARMATURE ASS'Y 220V	
039	210025-8	BALL BEARING 627LLB	250
040	911165-2	PAN HEAD SCREW M4X35	80
041	691134-6	POWER SUPPLY CORD 0.75-3-2.5	1,010
042	643552-4	BRUSH HOLDER 5-8	100
043	B-80254	CARBON BRUSH SET CB-64A	
044	911114-9	PAN HEAD SCREW M4X10	30
045	651555-4	SWITCH W210ND-6	820
046	651242-5	SWITCH SGEL106C-1	420
047	155375-3	HANDLE COVER COMPLETE	870
048	911136-9	PAN HEAD SCREW M4X20	50
050	911133-5	PAN HEAD SCREW M4X18	50
051	687053-2	STRAIN RELIEF	70
052	159775-9	MOTOR HOUSING COMPLETE	2,650
053	682504-0	CORD GUARD 10-85	190
400	784202-3	PHILLIPS BIT 2-45	170

SERVICE DRAWING

MODEL NO. 6701B

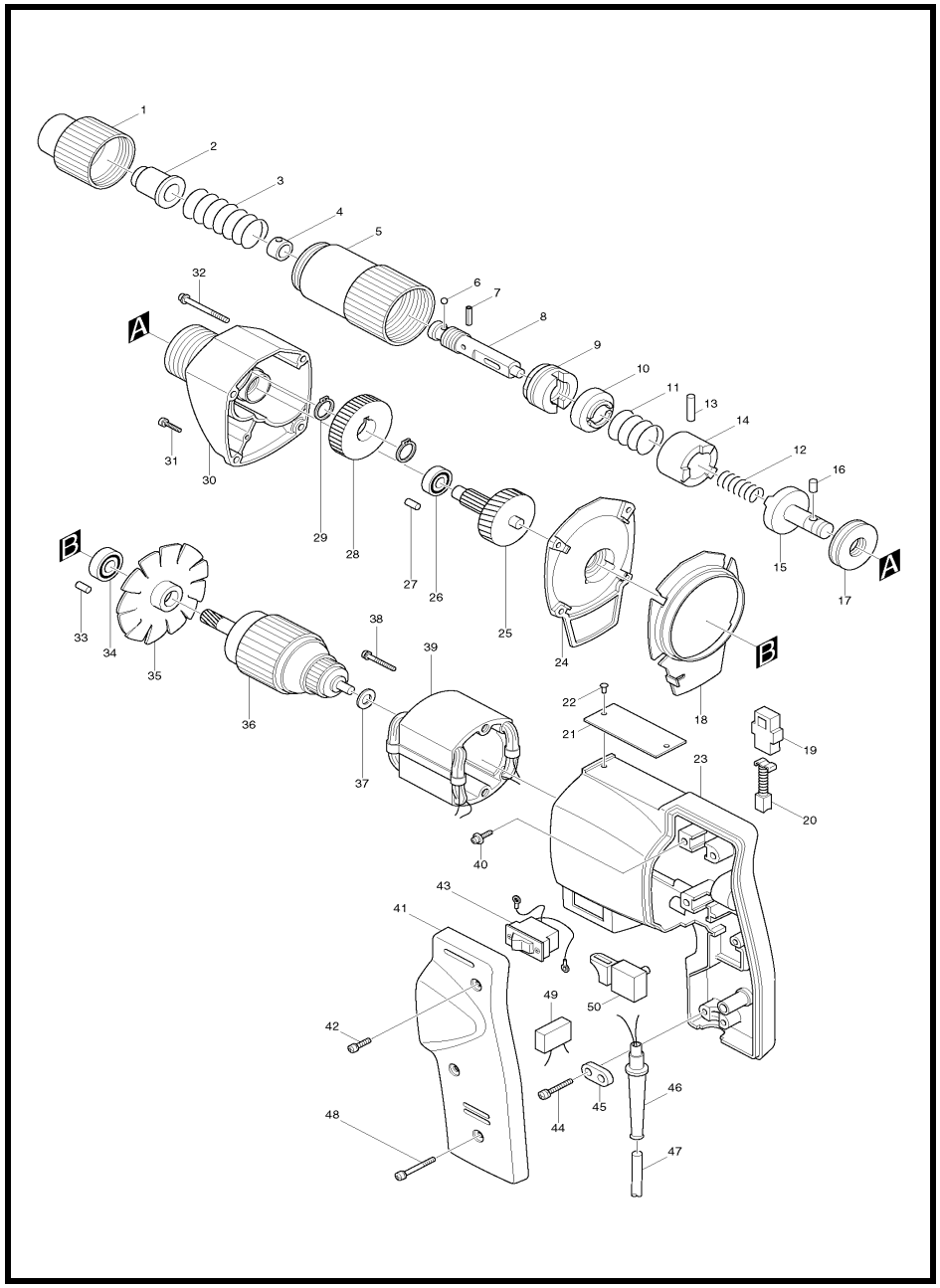

MODEL 6701B

ITEM	PARTS ID	DESCRIPTION	PRICE/BAHT
001	323075-5	FRONT COVER	730
002	323074-7	SCREW GUIDE 8.0	210
003	231017-4	COMPRESSION SPRING 15	50
004	232050-9	LEAF SPRING	50
005	323073-9	CLUTCH COVER	1,240
006	216001-0	STEEL BALL 3.5	20
007	951060-4	SPRING PIN 3-14	30
008	133454-7	SPINDLE	1,230
009	313003-8	ADJUSTING NUT	640
010	313004-6	THRUST COLLAR	470
011	231018-2	COMPRESSION SPRING 17	80
012	231271-0	COMPRESSION SPRING 4	80
013	256010-7	PIN 5	110
014	223001-3	CLUTCH CAM	780
015	223002-1	CLUTCH SHAFT	1,050
016	256009-2	PIN 4.5	80
017	212110-3	THRUST NEEDLE BEARING 1224	520
018	410282-0	BAFFLE PLATE	190
019	643551-6	BRUSH HOLDER 5-8	130
020	B-80248	CARBON BRUSH SET CB-55A	
022	953106-2	RIVET 0-5	20
023	157279-5	MOTOR HOUSING	1,530
024	156077-4	GEAR HOUSING COVER	960
025	226029-0	GEAR COMPLETE 9-39	1,380
026	211016-2	BALL BEARING 626LLB	320
027	263002-9	RUBBER PIN 4	30
028	221023-7	SPUR GEAR 54	830
029	961052-5	RETAINING RING S-12	40
030	156060-1	GEAR HOUSING	1,810
031	911146-6	PAN HEAD SCREW M4X25	20
032	911176-7	PAN HEAD SCREW M4X50	50
033	263002-9	RUBBER PIN 4	30
034	211031-6	BALL BEARING 608LLB	190
037	261008-1	FIBER WASHER 6	30
038	911165-2	PAN HEAD SCREW M4X35	80
040	911124-6	PAN HEAD SCREW M4X14	30
041	411196-6	HANDLE COVER	340
042	911148-2	PAN HEAD SCREW M4X25	70
043	651561-9	SWITCH HSL205N-8	760
044	911128-8	PAN HEAD SCREW M4X16	30
045	687001-1	STRAIN RELIEF	50
046	682504-0	CORD GUARD 10-85	190
047	691015-4	POWER SUPPLY CORD 0.75-2-2.5	740
048	911158-9	PAN HEAD SCREW M4X30	30
050	651204-3	SWITCH SGEL115CDY	420
400	784203-1	PHILLIPS BIT 2-65	190
401	784005-5	SLOTTED BIT 6.35-45	230

SERVICE DRAWING

MODEL NO. 6723DW

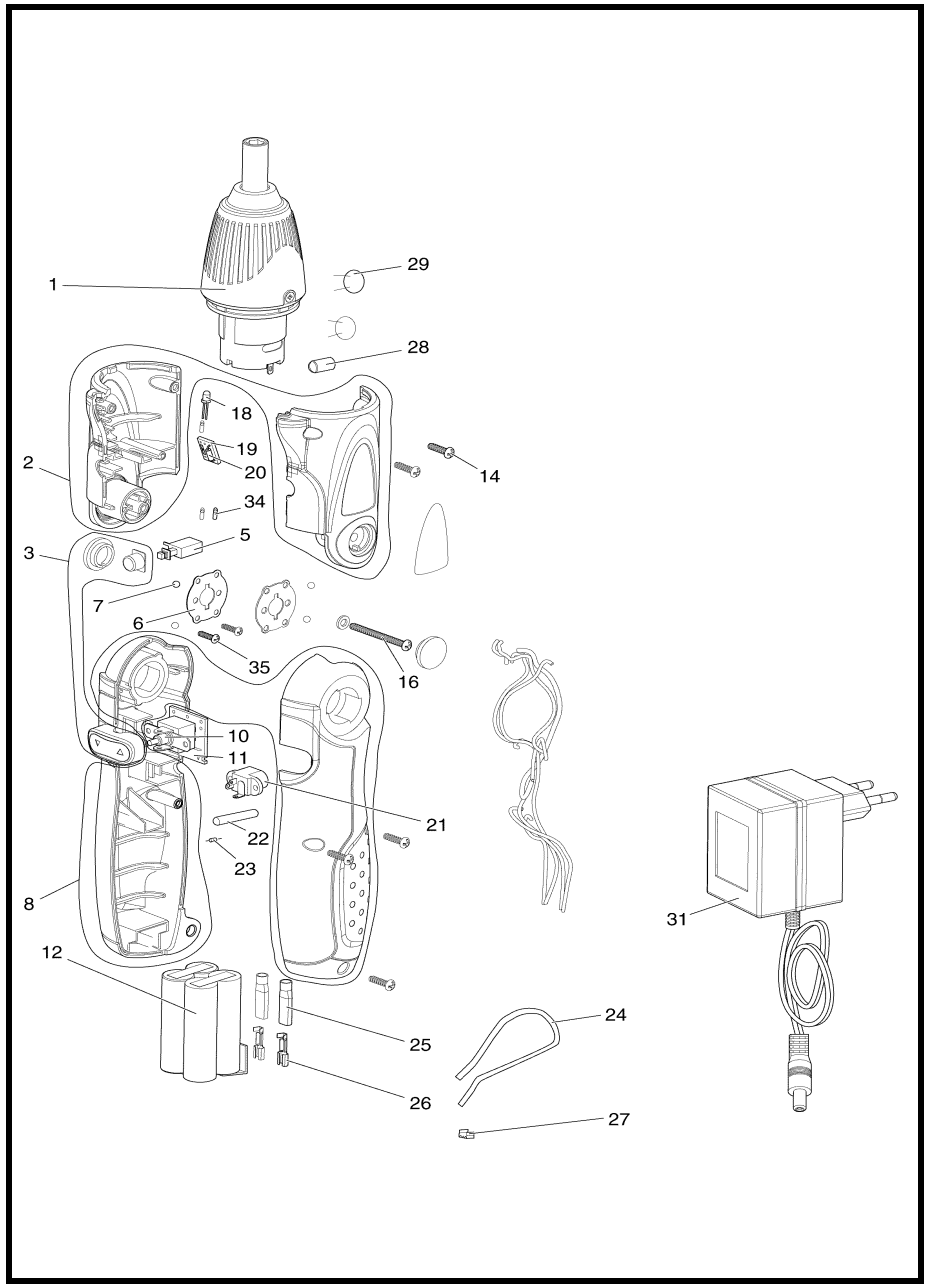

MODEL 6723DW

ITEM	PARTS ID	DESCRIPTION	PRICE/BAHT
001	TP00000095	MOTOR ASSY MGB-285MG01-R	1,170
002	TP00000096	L/R HOUSING SET AP-0285-5-L/R	160
003	TP00000097	BUTTON COVER SET AP-0289CLS-R	80
005	TL00000005	SWITCH (CSW-P11N003A)	100
006	TL00000006	SPRING CLIP (AM-02890001)	90
007	TL00000007	STEEL BALL (AM-05060004)	50
008	TP00000098	L/R HANDLE APS-0285-0-L/R-R	200
010	TP00000099	ON/OFF/ON SWITCH	200
011	TL00000011	CIRCUIT BOARD (AN-0289001)	100
012	TP00000164	BATTERY (EBT-N06AA1/SY)	980
014	TL00000014	SCREW 3.0X10 MM (MSS-B30H10B3)	170
016	TL00000016	SCREW 3.5X26MM(MSS-B35H26BT3	40
018	TP00000075	LED LIGHT SLD-3D9L04	40
019	TL00000018	CIRCUIT BOARD (AN-0283001)	330
020	TL00000019	RESISTOR (RSC-560G4)	40
021	TL00000020	DC JACK (CJP-DJ2155B)	40
022	TL00000028	SHRINK PIPE(DTU-SK030U020)	70
023	TL00000029	DIODE IN 4001 (SRT-4001D)	40
024	TL00000021	WRIST STRAP (DCW-WS0B040)	40
025	TL00000030	INSULATION (AN-0282001)	50
026	TL00000031	FEMALE TERMINAL (CTM-SR1803)	60
027	TL00000022	STRING CLIP (AM-02880001)	40
028	TL00000026	FERRITE BEAD (OFB-057098)	70
029	TL00000027	CERAMIC CAPACITOR(CPC-104050A)	60
031	TL00000023	CHARGER (BHY35060300GS)	620
034	TP00000100	SHRINK PIPE 2*10 DTUSK020U010R	30
035	TP00000101	SCREW 2.6X8 MSS-B26H08B3-R	40

SERVICE DRAWING

MODEL NO. 6821

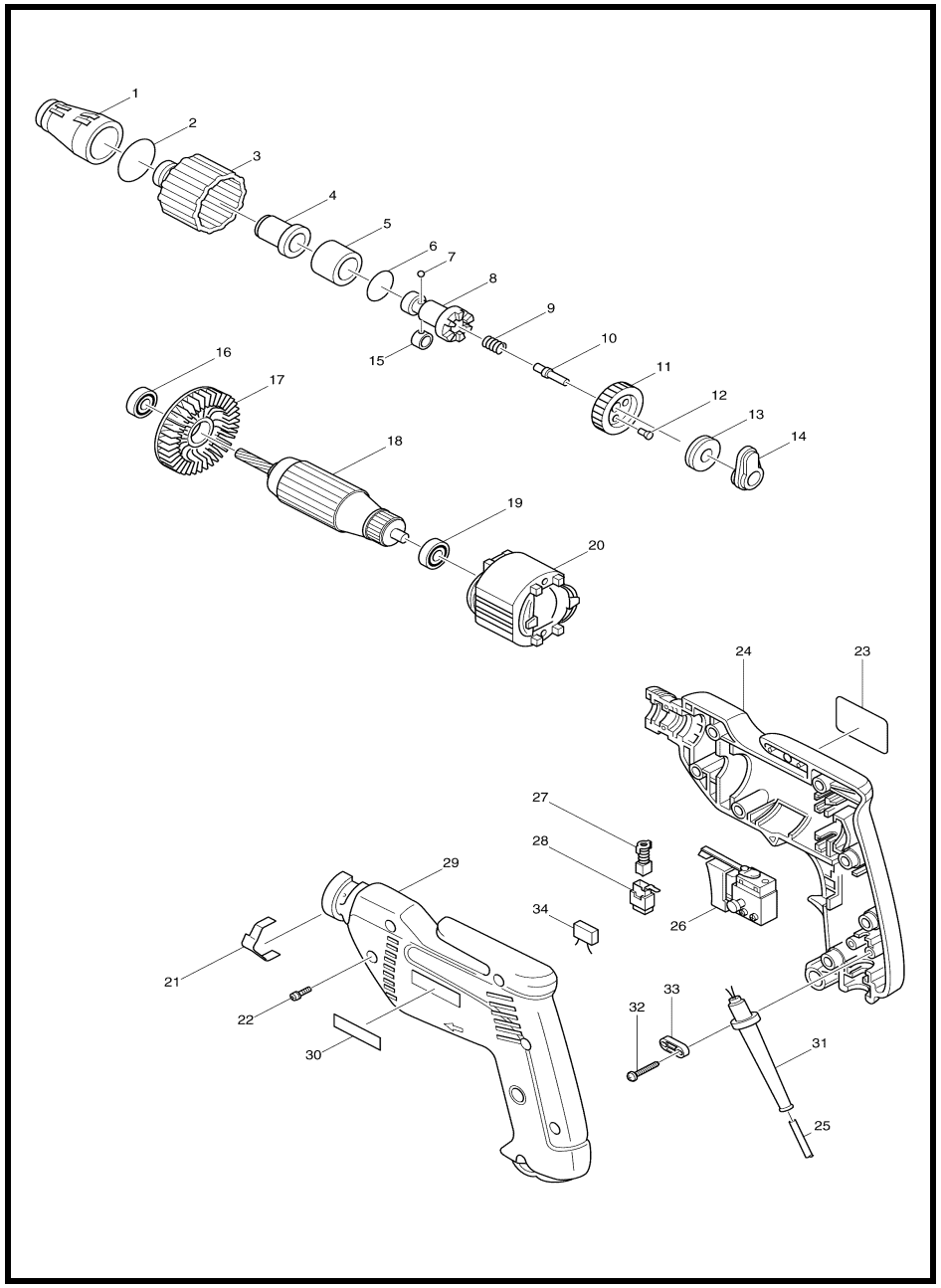

MODEL 6821

ITEM	PARTS ID	DESCRIPTION	PRICE/BAHT
001	152483-1	LOCATOR COMPLETE 1/4"	320
002	213373-4	O RING 22	50
003	415570-0	LOCK RING	320
004	421519-0	DUST RING	160
005	214154-9	PLANE BEARING 14	100
006	421392-8	RING 20	80
007	216001-0	STEEL BALL 3.5	20
008	223107-7	SPINDLE	1,290
009	233126-5	COMPRESSION SPRING 6	30
010	256699-1	PIN 8	320
011	226444-8	HELICAL GEAR 46	1,350
012	256467-2	SHOULDER PIN 4	150
013	212047-4	THRUST NEEDLE BEARING 821	400
014	152531-6	BEARING BOX COMPLETE	360
015	232050-9	LEAF SPRING	50
016	211031-6	BALL BEARING 608LLB	190
018	517153-3	ARMATURE ASS'Y 220V	
019	211028-5	BALL BEARING 627LB	290
020	633323-7	FIELD 220V	
021	232147-4	LEAF SPRING	150
022	911138-5	PAN HEAD SCREW M4X20	50
024	182856-4	HOUSING SET	1,610
025	691055-2	POWER SUPPLY CORD 0.75-2-2.0	1,100
026	651986-7	SWITCH TG803TLB-1	1,480
027	B-80422	CARBON BRUSH SET CB-419A	
028	643936-6	BRUSH HOLDER	230
029	182856-4	HOUSING SET	1,610
030	819063-3	MAKITA LABEL	30
031	682502-4	CORD GUARD 8-85	110
032	265995-6	TAPPING SCREW 4X18	40
033	687052-4	STRAIN RELIEF	80
A01	784811-8	MAGNETIC CONNECT BIT 6.35-60	620
A02	784261-7	+BIT 2-25	110

SERVICE DRAWING

MODEL NO. 6824N

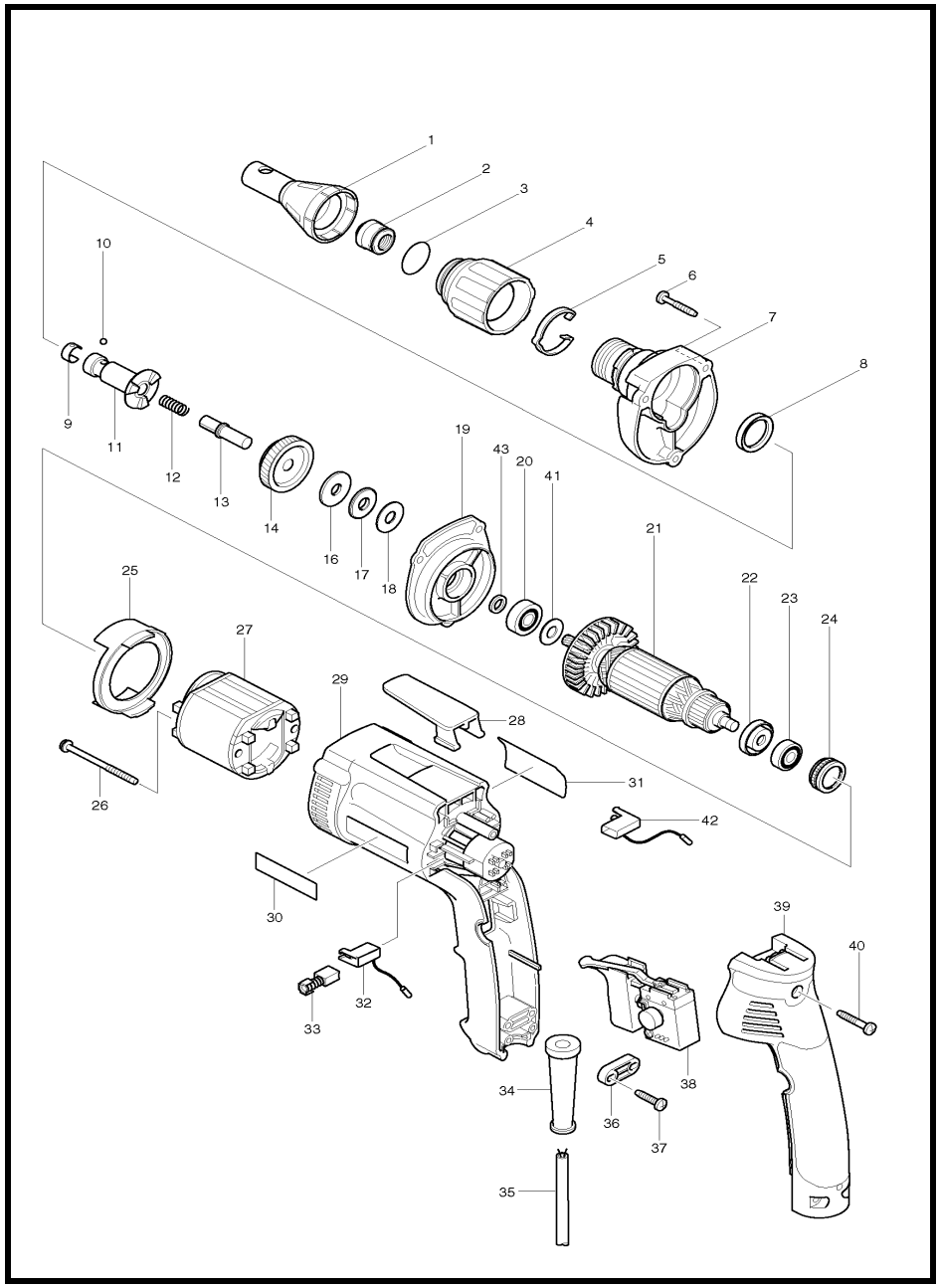

MODEL 6824N

ITEM	PARTS ID	DESCRIPTION	PRICE/BAHT
001	151726-8	LOCATOR COMPLETE	230
002	421631-6	DUST SEAL RING	120
003	213373-4	O RING 22	50
004	416994-3	LOCK RING	180
005	232154-7	LEAF SPRING	210
006	265999-8	TAPPING SCREW 4X25	30
007	153498-1	GEAR HOUSING COMPLETE	560
008	421766-3	RING 20	50
009	232050-9	LEAF SPRING	50
010	216001-0	STEEL BALL 3.5	20
011	324290-4	SPINDLE	1,230
012	233126-5	COMPRESSION SPRING 6	30
013	268099-3	COLLARED PIN 8	130
014	226566-4	HELICAL GEAR 43	780
016	216213-5	WASHER 824	120
017	216415-3	THRUST NEEDLE GAUGE 821	270
018	216212-7	WASHER 821	120
019	153500-0	GEAR HOUSING COVER COMPLETE	370
020	210007-0	BALL BEARING 608VV	320
021	517323-4	ARMATURE ASS'Y 220V	
022	681636-0	INSULATION WASHER	60
023	211021-9	BALL BEARING 607LLB	240
024	421479-6	RUBBER RING 19	290
025	416993-5	BAFFLE PLATE	110
026	266147-2	TAPPING SCREW 4X55	100
027	633443-7	FIELD 220-240V	
028	417625-7	HOOK	170
029	450718-7	MOTOR HOUSING	540
030	819063-3	MAKITA LABEL	30
031	850196-5	NAME PLATE 6824N	80
032	643948-9	BRUSH HOLDER	180
033	B-80422	CARBON BRUSH SET CB-419A	
034	682566-8	CORD GUARD 10	80
035	691015-4	POWER SUPPLY CORD 0.75-2-2.5	740
036	687053-2	STRAIN RELIEF	70
037	265995-6	TAPPING SCREW 4X18	40
038	651978-6	SWITCH C3MA-2L	2,100
039	158710-4	HANDLE COVER COMPLETE	530
040	265999-8	TAPPING SCREW 4X25	30
041	253139-0	FLAT WASHER 8	50
042	643951-0	BRUSH HOLDER	190
043	262087-2	RING 8	360
A01	784211-2	PHILLIPS INSERT BIT 2-25	110
A02	784801-1	MAGNETIC BIT HOLDER 6.35-76	600

SERVICE DRAWING

MODEL NO. 6904VH

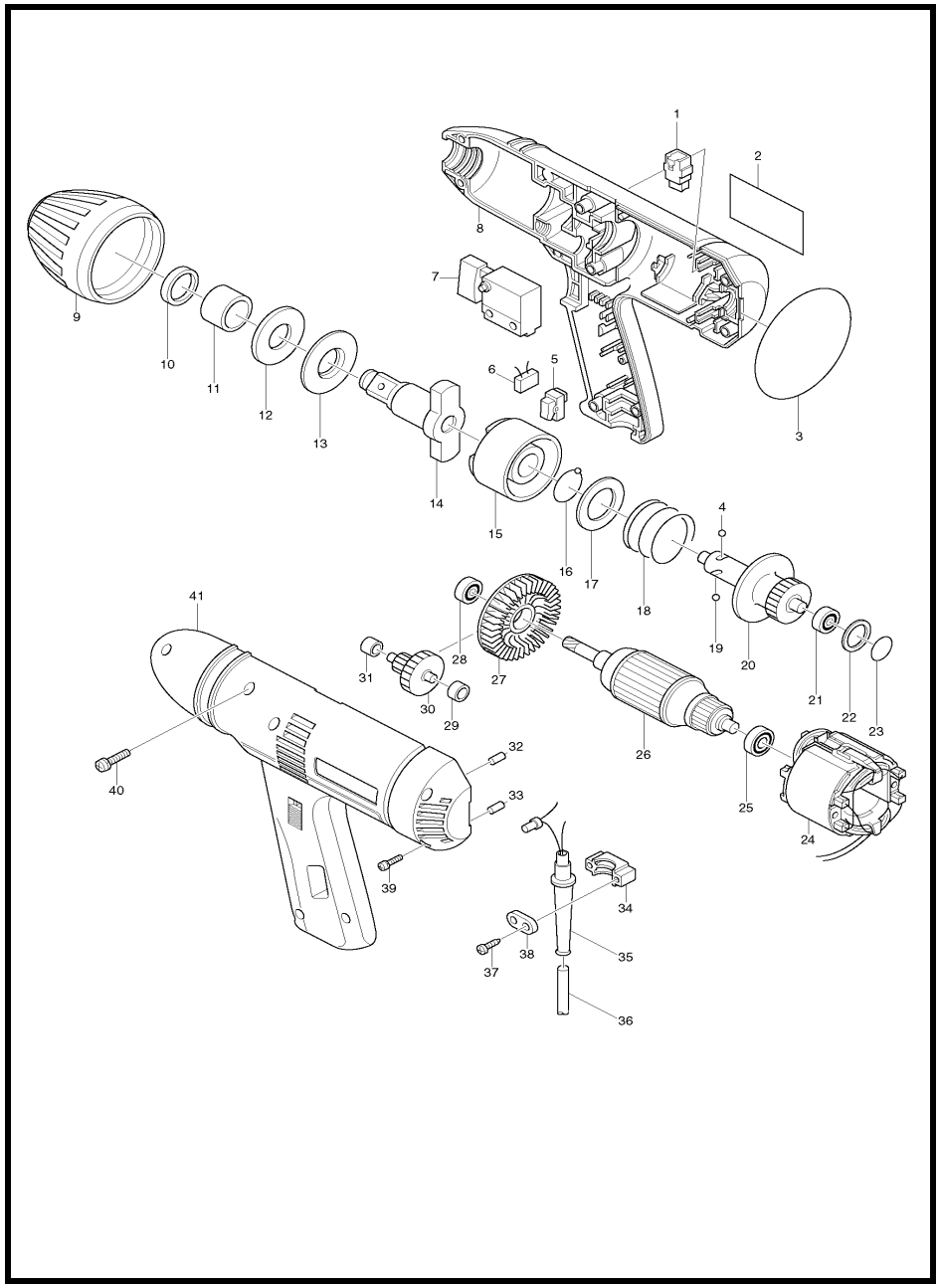

MODEL 6904VH

ITEM	PARTS ID	DESCRIPTION	PRICE/BAHT
001	B-80400	CARBON BRUSH SET CB-415A	
003	213719-4	O RING 62	100
004	216011-7	STEEL BALL 5.6	20
005	651556-2	SWITCH VLX11	750
007	651262-9	SWITCH SGEL106CV-2	2,190
008	182811-6	HOUSING SET	2,250
009	421382-1	BUMPER	340
010	213257-6	OIL SEAL 18	230
011	257623-7	SLEEVE 18	390
012	261089-5	RUBBER WASHER 18	170
013	267054-2	FLAT WASHER 18	210
014	324255-6	ANVIL	2,310
015	322459-4	HAMMER	2,250
016	216008-6	STEEL BALL 4	20
017	267088-5	FLAT WASHER 28	230
018	233079-8	COMPRESSION SPRING 30	270
019	216011-7	STEEL BALL 5.6	20
020	153232-9	SPINDLE COMPLETE	2,780
021	211051-0	BALL BEARING 609LLB	240
022	267106-9	FLAT WASHER 18	80
023	213304-3	O RING 20	40
024	633158-6	FIELD 220V	
025	210025-8	BALL BEARING 627LLB	250
028	211051-0	BALL BEARING 609LLB	240
029	214017-9	PLANE BEARING 5	80
030	226108-4	GEAR COMPLETE 16-38	1,400
031	214033-1	PLANE BEARING 6	170
032	263002-9	RUBBER PIN 4	30
033	263002-9	RUBBER PIN 4	30
034	687051-6	STRAIN RELIEF	80
035	682504-0	CORD GUARD 10-85	190
036	691015-4	POWER SUPPLY CORD 0.75-2-2.5	740
037	265995-6	TAPPING SCREW 4X18	40
038	687053-2	STRAIN RELIEF	70
039	911148-2	PAN HEAD SCREW M4X25	70
040	911536-3	PAN HEAD SCREW M4X20	80
041	182811-6	HOUSING SET	2,250
A01	134829-3	SOCKET 17-38 ASS'Y	400
A02	134838-2	SOCKET 21-38 ASS'Y	490
A03	134842-1	SOCKET 26-50 ASS'Y	670
A04	268057-9	PIN 4	120
A05	213399-6	O-RING 25	120
A07	213397-0	O-RING 22	120
A08	268056-1	PIN 4	120
E01	231907-1	RING SPRING 10	50

SERVICE DRAWING

MODEL NO. 6905B

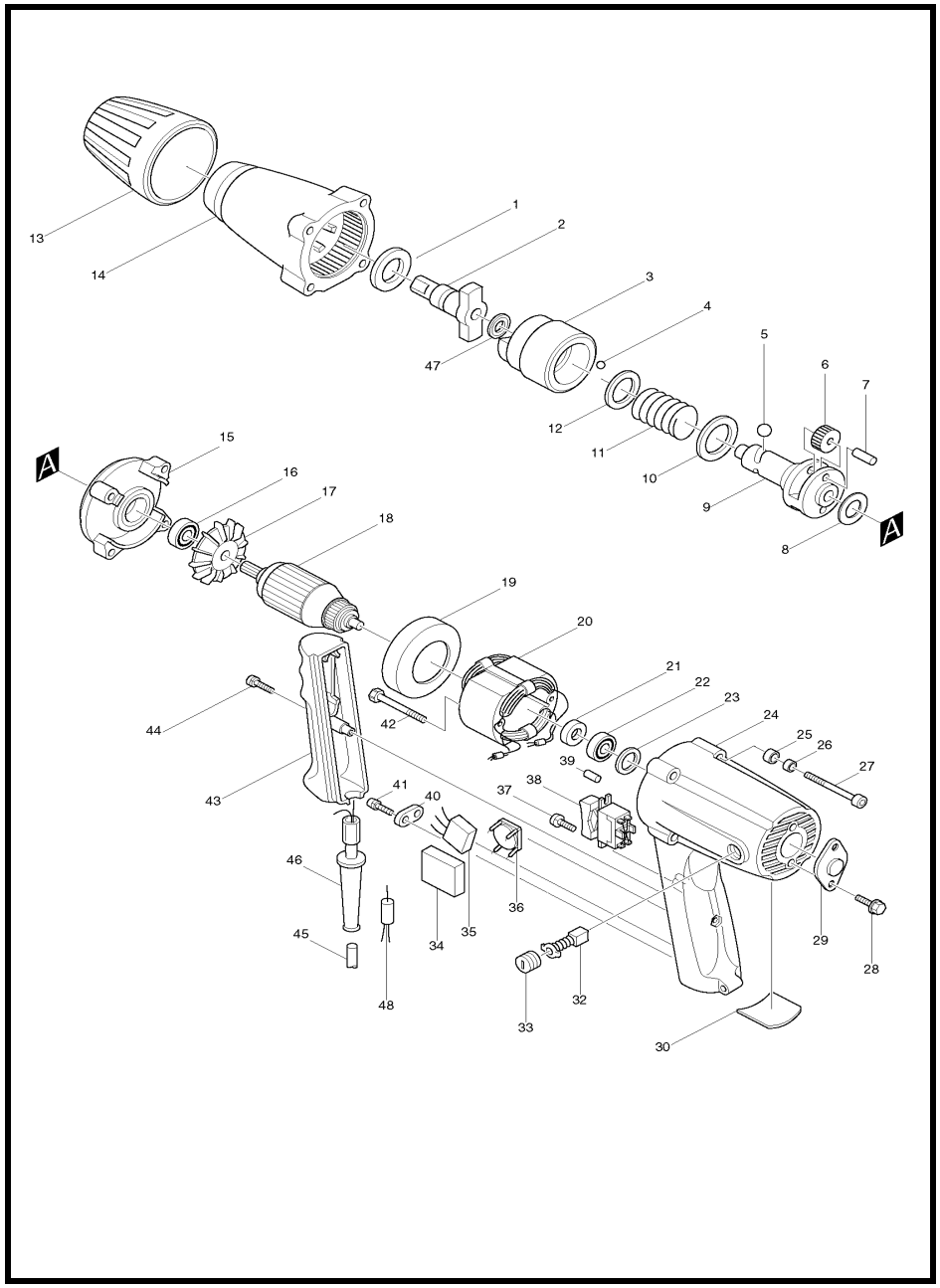

MODEL 6905B

ITEM	PARTS ID	DESCRIPTION	PRICE/BAHT
001	253937-2	FLAT WASHER 18	320
002	132311-6	ANVIL ASS'Y	4,390
003	322246-1	HAMMER	5,120
004	216008-6	STEEL BALL 4	20
005	216007-8	STEEL BALL 6.4	30
006	221849-7	SPUR GEAR 33	720
007	256033-5	PIN 6	80
008	253794-8	FLAT WASHER 18	80
009	321118-7	SPINDLE	5,390
010	253751-6	FLAT WASHER 24	80
011	231261-3	COMPRESSION SPRING 24	190
012	253793-0	FLAT WASHER 22	120
013	421157-8	BUMPER	270
014	156544-9	HAMMER CASE	4,940
015	152145-1	BEARING HOUSING COMPLETE	1,870
016	211031-6	BALL BEARING 608LLB	190
018	515133-3	ARMATURE ASS'Y 220V	
019	411601-3	BAFFLE PLATE	150
020	625118-2	FIELD 220V	
021	681614-0	INSULATION WASHER	80
022	210025-8	BALL BEARING 627LLB	250
023	262010-7	URETHANE RING 18	120
024	159161-4	MOTOR HOUSING	2,000
025	253929-1	CUP WASHER 5	80
026	262001-8	URETHANE RING 5	150
027	922903-7	HEX. SOCKET HEAD BOLT M5X50	80
028	921226-0	HEX. BOLT M5X18	50
029	285015-0	BEARING COVER 34	120
032	B-80260	CARBON BRUSH SET CB-65A	
033	643550-8	BRUSH HOLDER CAP 5-8	100
037	911106-8	PAN HEAD SCREW M4X8	30
038	651564-3	SWITCH SL220SD-4	1,250
039	263002-9	RUBBER PIN 4	30
040	687001-1	STRAIN RELIEF	50
041	911133-5	PAN HEAD SCREW M4X18	50
042	265349-7	+ HEX. BOLT M4X50	120
043	411600-5	HANDLE COVER	360
044	911168-6	PAN HEAD SCREW M4X40	40
045	691015-4	POWER SUPPLY CORD 0.75-2-2.5	740
046	682504-0	CORD GUARD 10-85	190
047	231907-1	RING SPRING 10	50
048	261074-8	NYLON WASHER 22	80

SERVICE DRAWING

MODEL NO. 6905H

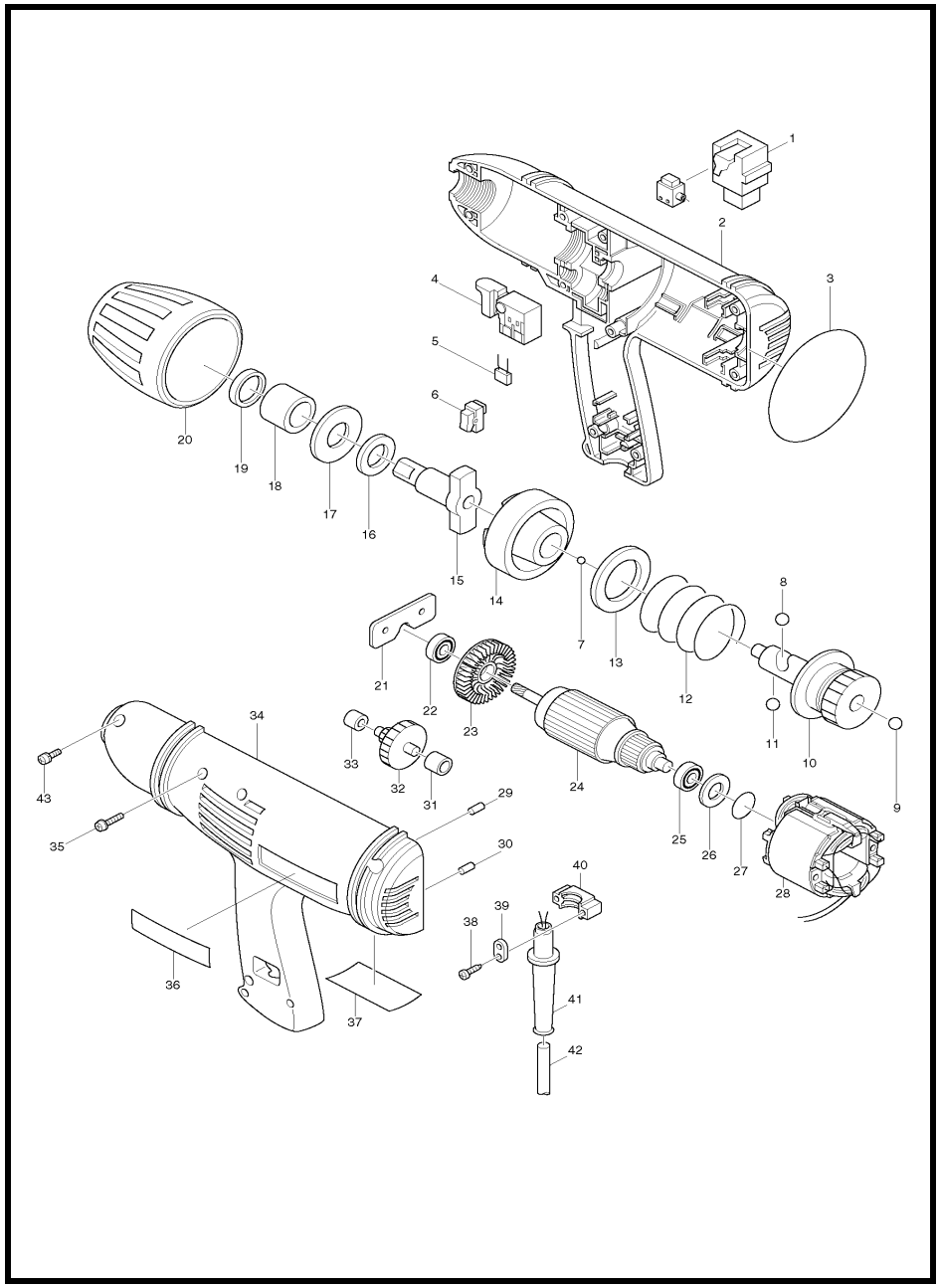

MODEL 6905H

ITEM	PARTS ID	DESCRIPTION	PRICE/BAHT
001	B-80400	CARBON BRUSH SET CB-415A	
002	182471-4	HOUSING SET	2,120
003	213718-6	O RING 70	120
004	651248-3	SWITCH SGE106C	440
006	651556-2	SWITCH VLX11	750
007	216008-6	STEEL BALL 4	20
008	216007-8	STEEL BALL 6.4	30
009	216007-8	STEEL BALL 6.4	30
010	153199-1	SPINDLE COMPLETE	2,840
011	216007-8	STEEL BALL 6.4	30
012	231493-2	COMPRESSION SPRING 34	230
013	267079-6	FLAT WASHER 34	160
014	322391-2	HAMMER	2,310
015	324357-8	ANVIL	2,680
016	253937-2	FLAT WASHER 18	320
017	261089-5	RUBBER WASHER 18	170
018	257637-6	SLEEVE 18	450
019	213257-6	OIL SEAL 18	230
020	421747-7	BUMPER	320
021	162149-5	CUSHION PLATE	430
022	211031-6	BALL BEARING 608LLB	190
024	516053-4	ARMATURE ASS'Y 220V	
025	210025-8	BALL BEARING 627LLB	250
026	253192-6	FLAT WASHER 14	70
027	213262-3	O RING 18	40
028	634178-3	FIELD 220V	
029	263002-9	RUBBER PIN 4	30
030	263002-9	RUBBER PIN 4	30
031	214012-9	PLANE BEARING 6	80
032	226100-0	GEAR COMPLETE 16-38	1,520
033	214022-6	PLANE BEARING 8	120
034	182471-4	HOUSING SET	2,120
035	911546-0	PAN HEAD SCREW M4X25	80
036	819003-1	MAKITA LABEL	70
038	265995-6	TAPPING SCREW 4X18	40
039	687053-2	STRAIN RELIEF	70
040	687051-6	STRAIN RELIEF	80
041	682504-0	CORD GUARD 10-85	190
042	691015-4	POWER SUPPLY CORD 0.75-2-2.5	740
043	911546-0	PAN HEAD SCREW M4X25	80
A01	134831-6	SOCKET 19-38 ASS'Y	410
A02	134851-0	SOCKET 22-38 ASS'Y	510
A03	134841-3	SOCKET 24-45 ASS'Y	600
A05	268057-9	PIN 4	120
A06	213399-6	O-RING 25	120
A07	213398-8	O RING 24	120

SERVICE DRAWING

MODEL NO. 6906

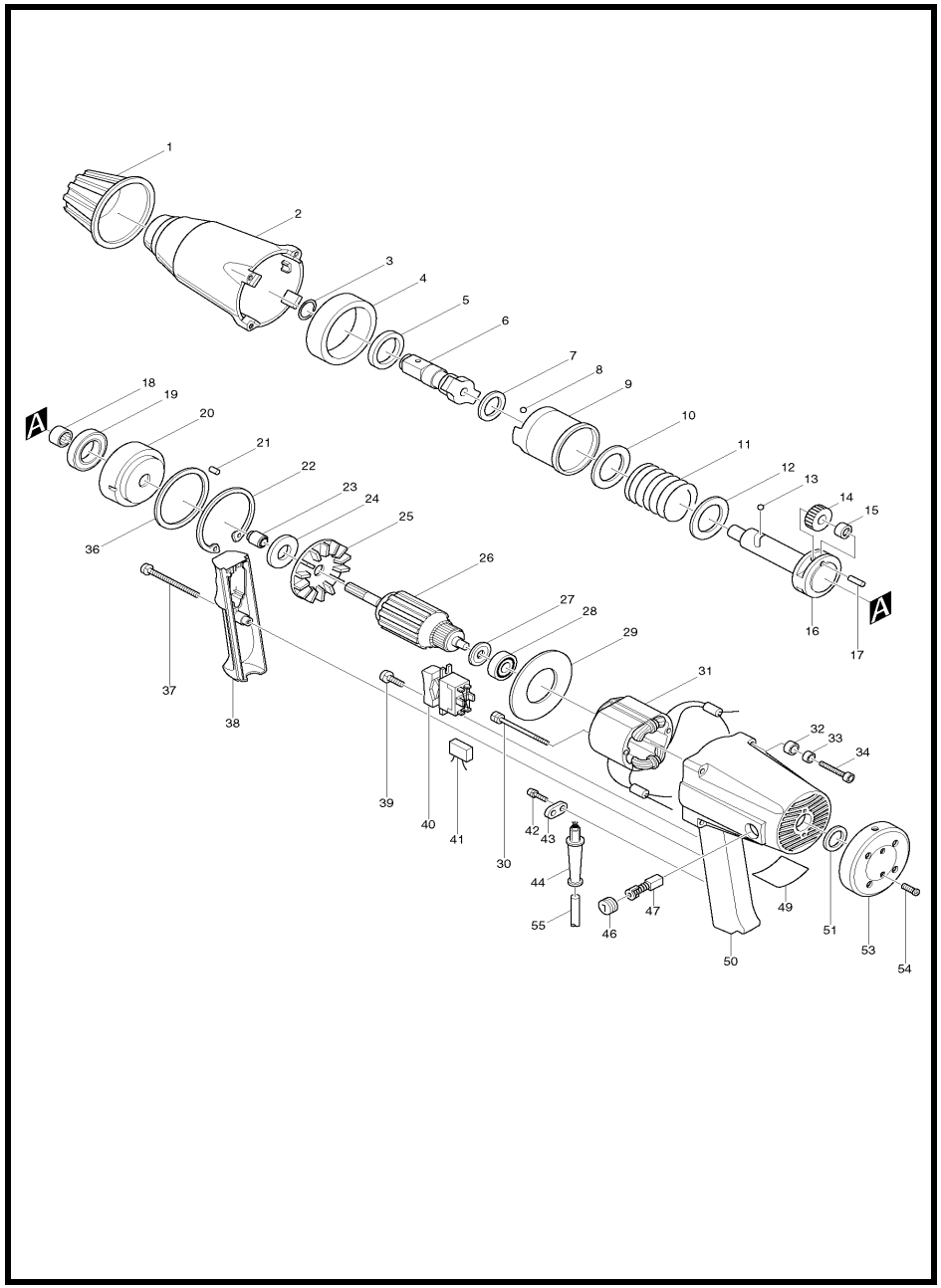

MODEL 6906

ITEM	PARTS ID	DESCRIPTION	PRICE/BAHT
001	421112-0	BUMPER	340
002	156087-1	HAMMER CASE	5,140
003	231920-9	RING SPRING 16	80
004	257040-1	RING 65	1,380
005	253939-8	FLAT WASHER 25	320
006	324231-0	ANVIL	4,260
007	261023-5	WASHER 27	170
008	216008-6	STEEL BALL 4	20
009	325318-1	HAMMER	5,370
010	253764-7	FLAT WASHER 30	170
011	231135-8	COMPRESSION SPRING 37	450
012	253765-5	FLAT WASHER 36	100
013	216009-4	STEEL BALL 7.1	30
014	221243-3	SPUR GEAR 29	690
015	212011-5	NEEDLE BEARING 609	490
016	325322-0	SPINDLE	5,240
017	256041-6	PIN 6	80
018	212151-9	NEEDLE BEARING 1412	570
019	211441-7	BALL BEARING 3009	880
020	221242-5	INTERNAL GEAR 65	3,350
021	256040-8	PIN 5	80
022	962352-6	RETAINING RING R-75	230
023	216103-2	INNER SLEEVE 1016	390
024	253180-3	FLAT WASHER 10	80
026	512883-1	ARMATURE ASS'Y 220V	
027	681613-2	INSULATION WASHER	80
028	211031-6	BALL BEARING 608LLB	190
029	413008-9	BAFFLE PLATE	290
030	265350-2	+ HEX. BOLT M5X70	150
032	253929-1	CUP WASHER 5	80
033	262001-8	URETHANE RING 5	150
034	922262-9	HEX. SOCKET HEAD BOLT M5X40	90
036	253774-4	FLAT WASHER 65	160
037	911173-3	PAN HEAD SCREW M4X45	50
038	414959-9	HANDLE COVER	360
039	911106-8	PAN HEAD SCREW M4X8	30
040	651564-3	SWITCH SL220SD-4	1,250
042	911133-5	PAN HEAD SCREW M4X18	50
043	687000-3	STRAIN RELIEF	40
044	682505-8	CORD GUARD 10-90	150
046	643600-9	BRUSH HOLDER CAP 6-10	70
047	B-80298	CARBON BRUSH SET CB-100A	
050	159414-1	MOTOR HOUSING	2,660
051	262010-7	URETHANE RING 18	120
053	284065-2	REAR COVER	600
054	922221-3	HEX. SOCKET HEAD BOLT M5X16	60
055	691216-4	POWER SUPPLY CORD 1.25-2-2.5	950
400	273474-0	GRIP 37	710
401	312700-3	GRIP BASE	550
403	251920-3	CAP SQUARE NECK BOLT M6X30	100
404	134871-4	SOCKET 32-52 ASS'Y	810
500	122464-9	GRIP ASS'Y	1,130

SERVICE DRAWING

MODEL NO. 6910

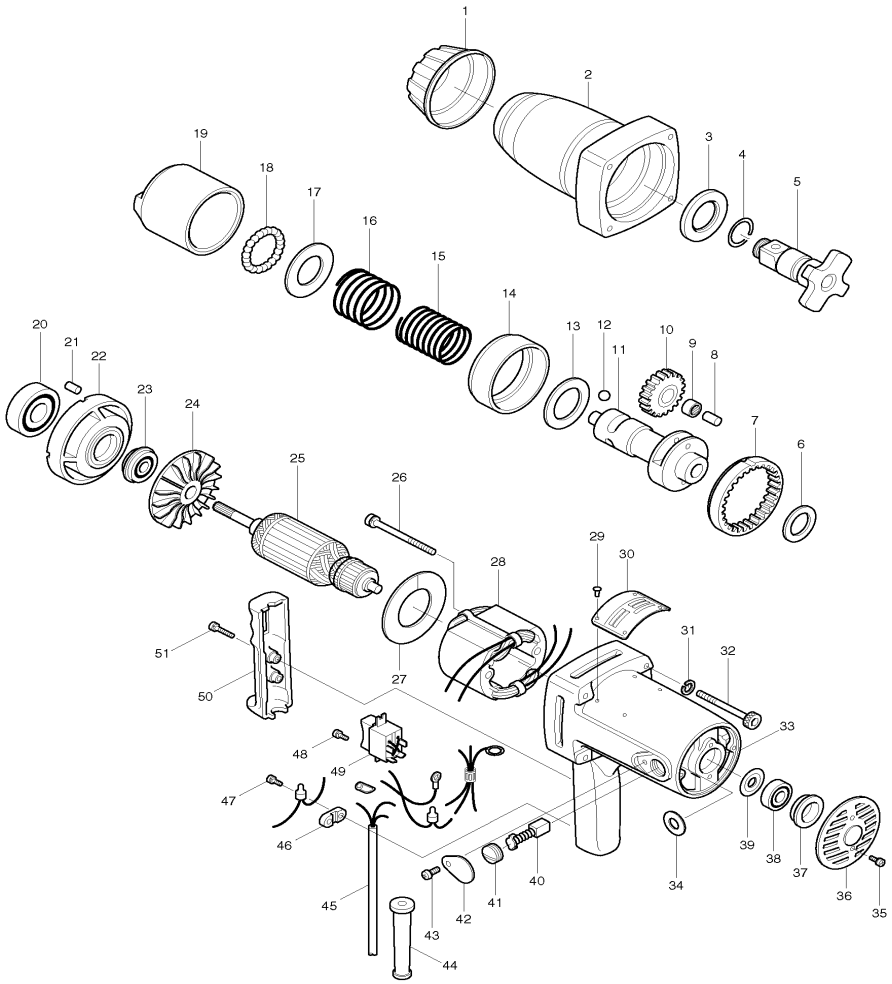

MODEL 6910

ITEM	PARTS ID	DESCRIPTION	PRICE/BAHT
001	421120-1	BUMPER	580
002	156135-6	HAMMER CASE	6,530
003	253909-7	FLAT WASHER 35	690
004	231921-7	RING SPRING 22	100
005	325587-4	ANVIL	8,350
006	253182-9	FLAT WASHER 36	190
007	221815-4	INTERNAL GEAR 82	6,570
008	256051-3	PIN 10	190
009	212063-6	NEEDLE BEARING 1012	390
010	221816-2	SPUR GEAR 37	1,030
011	325416-1	SPINDLE	7,720
012	216010-9	STEEL BALL 10.3	80
013	253713-4	FLAT WASHER 35	290
014	333112-7	RING 79	1,890
015	231211-8	COMPRESSION SPRING 36	870
016	231212-6	COMPRESSION SPRING 49	1,260
017	253712-6	FLAT WASHER 36	290
018	216002-8	STEEL BALL 4.8	20
019	325415-3	HAMMER	10,190
020	211451-4	BALL BEARING 6007LLB	1,040
021	256040-8	PIN 5	80
022	312739-6	BEARING HOUSING	3,020
023	211217-2	BALL BEARING 1511LLB	600
025	513285-4	ARMATURE ASS'Y 220V	
026	265343-9	+ HEX. BOLT M5X80	170
027	413009-7	BAFFLE PLATE	370
028	623255-6	FIELD 220V	
029	953106-2	RIVET 0-5	20
031	942151-2	SPRING WASHER 6	100
032	922382-9	HEX. SOCKET HEAD BOLT M6X60	110
033	156136-4	MOTOR HOUSING	10,470
034	681002-1	INSULATION WASHER	30
035	911216-1	PAN HEAD SCREW M5X14	30
036	284016-5	REAR COVER	320
037	421075-0	CUSHION RING	950
038	211066-7	BALL BEARING 6200LLB	410
039	213051-6	DUST SEAL 10	120
041	643650-4	BRUSH HOLDER CAP 6.5-13.5	70
042	341367-0	BRUSH HOLDER CAP COVER	80
043	911111-5	PAN HEAD SCREW M4X10	30
044	682506-6	CORD GUARD 12-90	100
045	691337-2	POWER SUPPLY CORD 1.25-3-2.5	1,240
046	687600-9	STRAIN RELIEF	50
047	911116-5	PAN HEAD SCREW M4X12	20
048	911106-8	PAN HEAD SCREW M4X8	30
050	312742-7	HANDLE COVER	1,440
051	911146-6	PAN HEAD SCREW M4X25	20
400	273444-9	GRIP 37	580
401	312743-5	GRIP BASE	410
403	345097-5	BELT	870
404	134872-2	SOCKET 41-80 ASS'Y	1,770
405	213570-2	O-RING 44	190

ITEM	PARTS ID	DESCRIPTION	PRICE/BAHT
407	783203-8	HEX. WRENCH 5	100
409	941201-0	FLAT WASHER 8	110
500	123018-5	SIDE GRIP ASS'Y	1,380

SERVICE DRAWING

MODEL NO. 6951

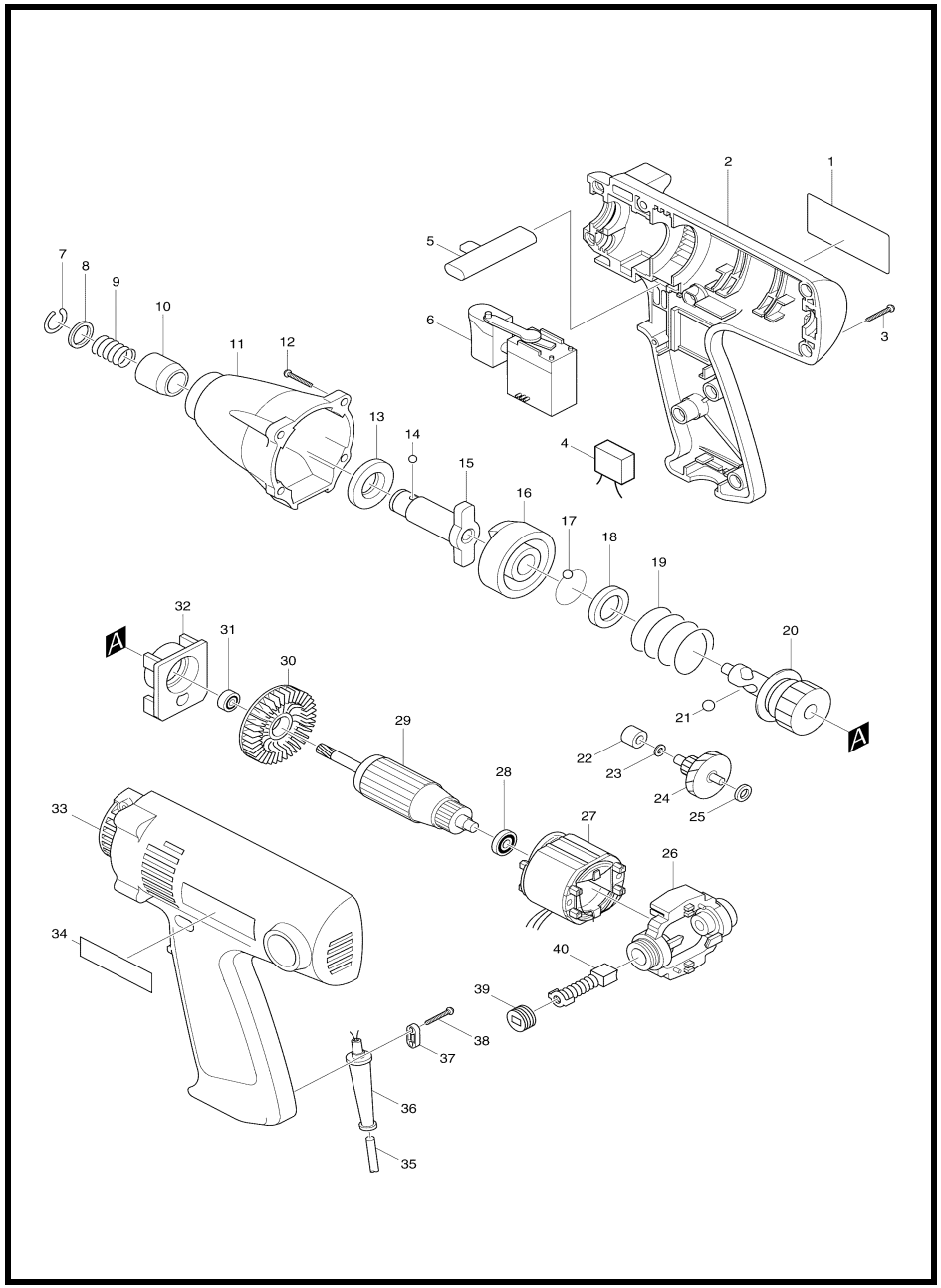

MODEL 6951

ITEM	PARTS ID	DESCRIPTION	PRICE/BAHT
002	182995-0	HOUSING SET	1,130
003	265995-6	TAPPING SCREW 4X18	40
005	416522-4	CHANGE LEVER	150
006	651965-5	SWITCH C3MA	2,090
007	231951-8	RING SPRING 11	50
008	267085-1	FLAT WASHER 12	100
009	233005-7	COMPRESSION SPRING 13	60
010	324420-7	SLEEVE	350
011	152583-7	HAMMER CASE COMPLETE	1,350
012	265995-6	TAPPING SCREW 4X18	40
013	261099-2	NYLON WASHER 14	100
014	216001-0	STEEL BALL 3.5	20
015	322705-5	ANVIL N	1,640
016	322793-2	HAMMER	1,260
017	216001-0	STEEL BALL 3.5	20
018	267126-3	FLAT WASHER 22	120
019	233111-8	COMPRESSION SPRING 24	150
020	153230-3	SPINDLE COMPLETE	1,940
021	216011-7	STEEL BALL 5.6	20
022	214034-9	PLANE BEARING 5	100
023	253811-4	FLAT WASHER 5	80
024	226815-9	GEAR COMPLETE 9-34	1,280
025	267099-0	FLAT WASHER 4	80
026	152582-9	HOLDER ARM COMPLETE	550
028	211023-5	BALL BEARING 607LB	320
031	210005-4	BALL BEARING 608DDW	240
032	152465-3	BEARING CASE COMPLETE	350
033	182995-0	HOUSING SET	1,130
034	819063-3	MAKITA LABEL	30
035	691065-9	POWER SUPPLY CORD 0.75-2-2.5	690
036	682502-4	CORD GUARD 8-85	110
037	687052-4	STRAIN RELIEF	80
038	265995-6	TAPPING SCREW 4X18	40
039	643928-5	BRUSH HOLDER CAP	100
E07	784203-1	PHILLIPS BIT 2-65	190

SERVICE DRAWING

MODEL NO. 6952

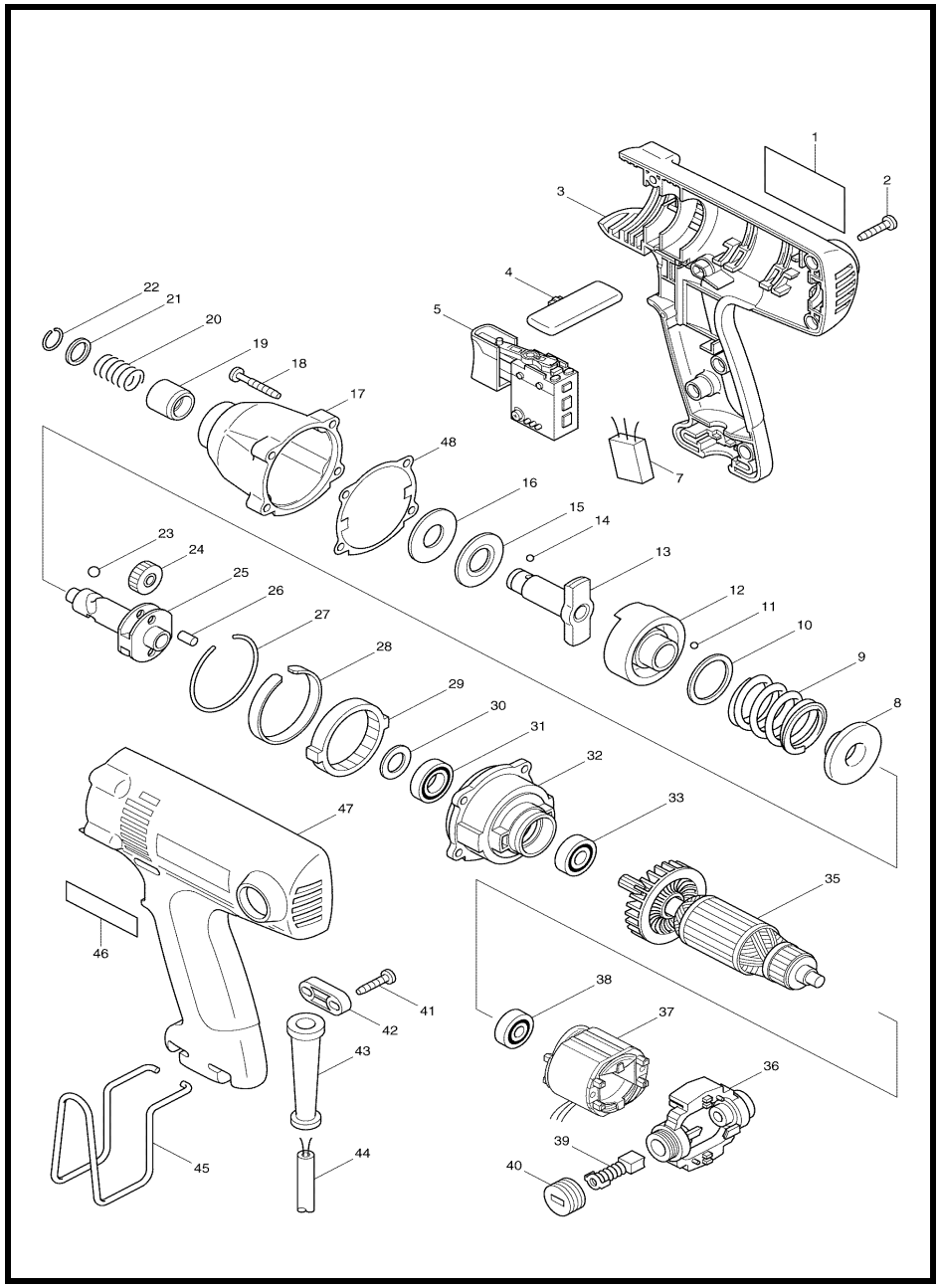

MODEL 6952

ITEM	PARTS ID	DESCRIPTION	PRICE/BAHT
002	265995-6	TAPPING SCREW 4X18	40
003	183394-9	HOUSING SET	1,640
004	417553-6	F/R CHANGE LEVER	120
005	650505-6	SWITCH C3MA-D	2,130
008	267759-4	CUP WASHER 14	160
009	233310-2	COMPRESSION SPRING 25	190
010	267175-0	FLAT WASHER 24	60
011	216001-0	STEEL BALL 3.5	20
012	324145-3	HAMMER	1,080
013	324093-6	ANVIL N	1,750
014	216001-0	STEEL BALL 3.5	20
015	267226-9	FLAT WASHER 14	190
016	261119-2	RUBBER WASHER 14	80
017	152828-3	HAMMER CASE COMPLETE	1,740
018	266295-7	HEX. SOCKET HEAD BOLT M4X30	80
019	324420-7	SLEEVE	350
020	233005-7	COMPRESSION SPRING 13	60
021	267085-1	FLAT WASHER 12	100
022	231951-8	RING SPRING 11	50
023	216011-7	STEEL BALL 5.6	20
024	226336-1	SPUR GEAR 22	400
025	324090-2	SPINDLE	1,590
026	256253-1	PIN 5	60
027	233910-8	RING SPRING 43	40
028	344991-8	C-SLEEVE 45	160
029	227001-5	INTERNAL GEAR 51	230
030	267212-0	FLAT WASHER 12	30
031	211140-1	BALL BEARING 6901LLB	440
032	317428-8	INTERNAL GEAR CASE	680
033	210024-0	BALL BEARING 608LLU	240
036	152990-4	HOLDER ARM COMPLETE	780
037	635033-2	FIELD 220V	
038	211021-9	BALL BEARING 607LLB	240
039	B-80391	CARBON BRUSH SET CB-411A	
040	643928-5	BRUSH HOLDER CAP	100
041	265995-6	TAPPING SCREW 4X18	40
042	687052-4	STRAIN RELIEF	80
043	682559-5	CORD GUARD 8	110
044	691065-9	POWER SUPPLY CORD 0.75-2-2.5	690
045	324284-9	HOOK	320
046	819063-3	MAKITA LABEL	30
047	183394-9	HOUSING SET	1,640
048	442137-1	GASKET	150
A01	784203-1	PHILLIPS BIT 2-65	190

SERVICE DRAWING

MODEL NO. 8271DW

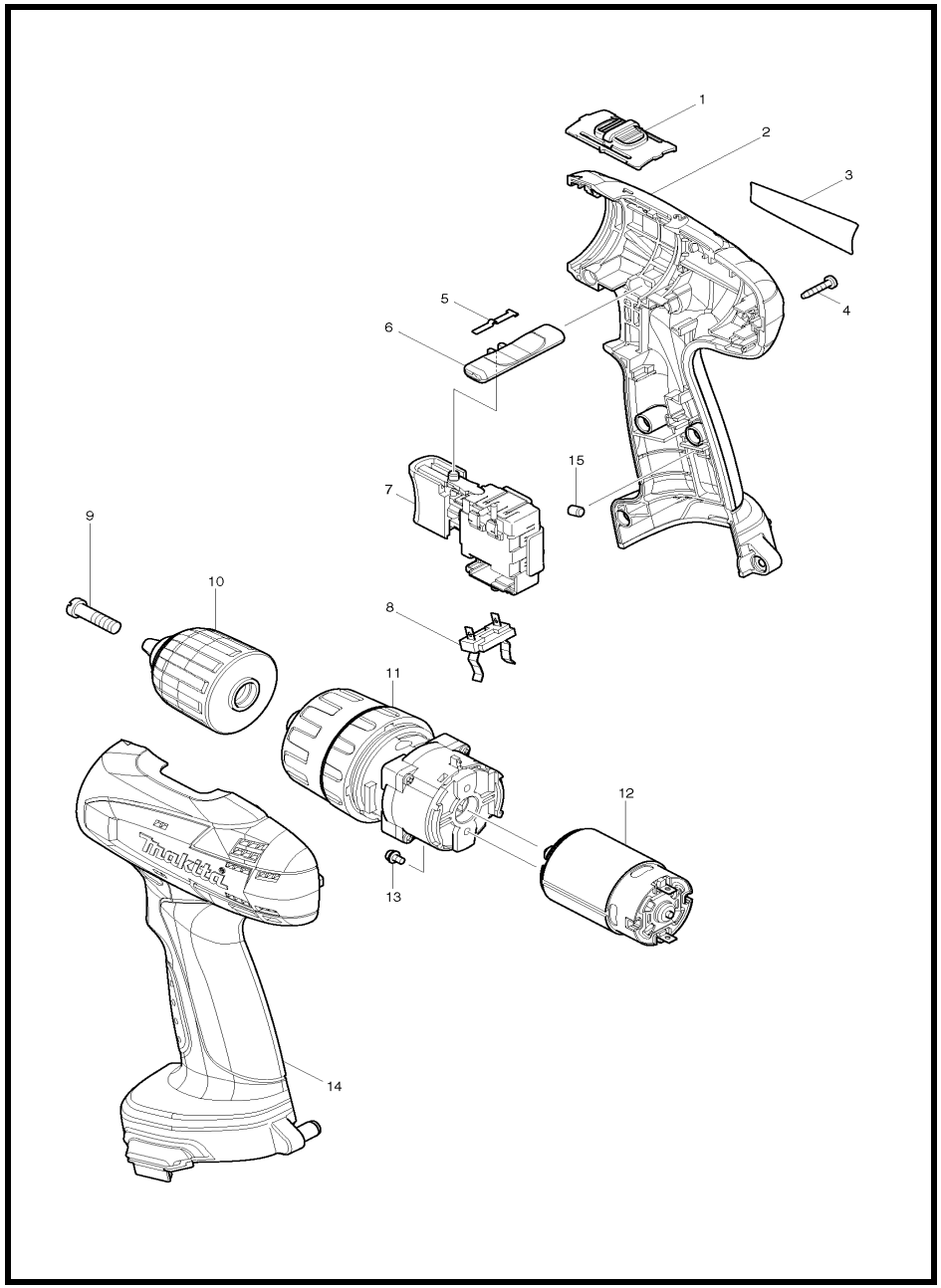

MODEL 8271DW

ITEM	PARTS ID	DESCRIPTION	PRICE/BAHT
001	125310-5	SPEED CHANGE LEVER ASS'Y	130
002	187300-6	HOUSING SET	720
004	266130-9	TAPPING SCREW BIND PT 3X16	30
005	232182-2	LEAF SPRING	80
006	450584-2	F/R CHANGE LEVER	50
007	650672-7	SWITCH TG563FSB-2	1,100
008	643909-9	BATTERY HOLDER	220
009	251468-5	- FLAT HEAD SCREW M6X22	100
010	766003-1	KEYLESS DRILL CHUCK 10	960
011	125484-2	GEAR ASS'Y	2,130
012	629821-7	DC MOTOR	970
013	911003-8	PAN HEAD SCREW M3X6	100
014	187300-6	HOUSING SET	720
015	263024-9	RUBBER PIN 4	80
A01	784636-0	+- BIT 2-65	160
A02	414938-7	BATTERY COVER	50
A03	***DC1414	DC1414 BATTERY CHARGER	2,940
A04	192681-5	BATTERY 1220 SET	4,910

SERVICE DRAWING

MODEL NO. 8281DW

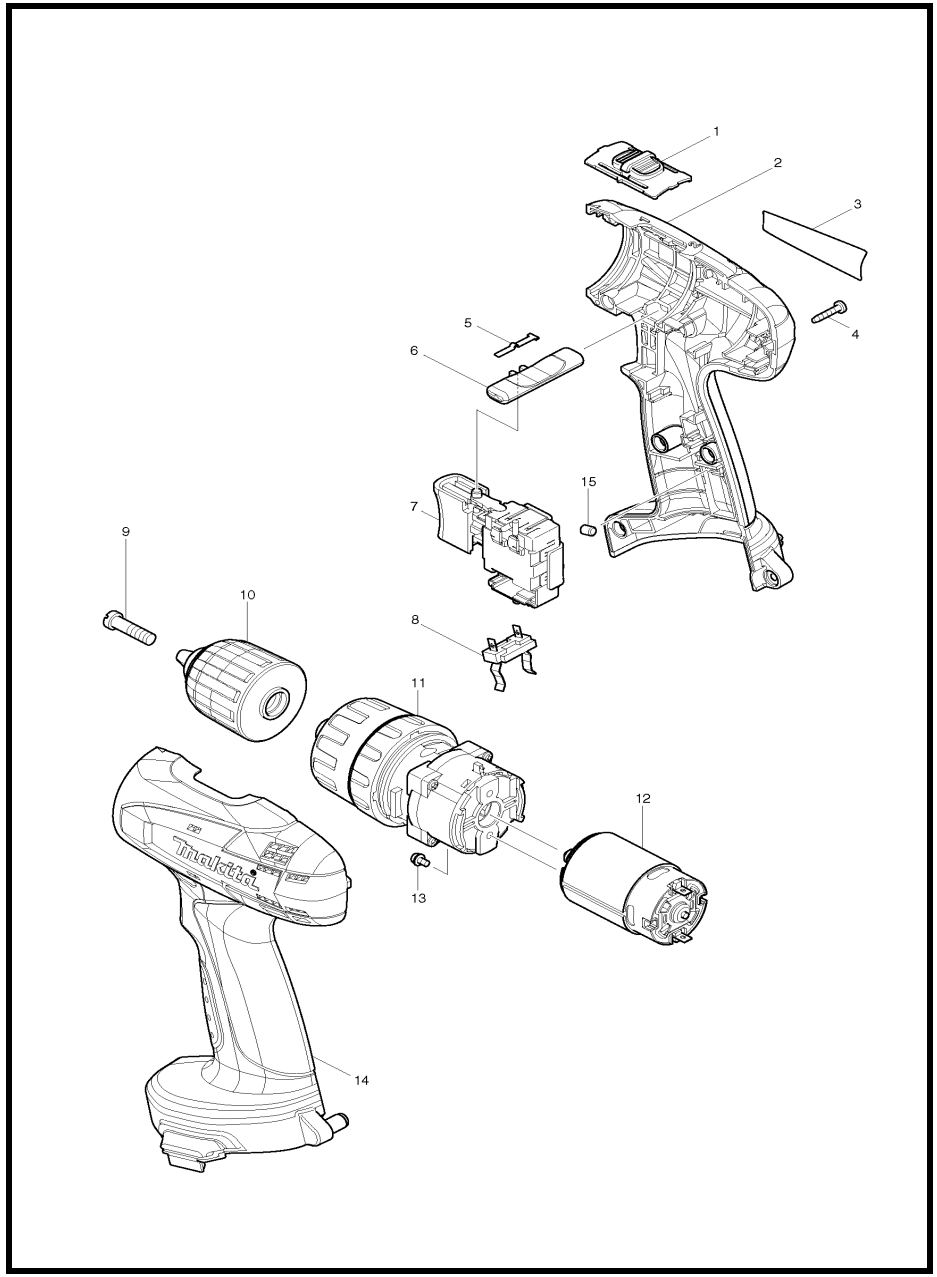

MODEL 8281DW

ITEM	PARTS ID	DESCRIPTION	PRICE/BAHT
001	125310-5	SPEED CHANGE LEVER ASS'Y	130
002	187301-4	HOUSING SET	730
004	266130-9	TAPPING SCREW BIND PT 3X16	30
005	232182-2	LEAF SPRING	80
006	450584-2	F/R CHANGE LEVER	50
007	650672-7	SWITCH TG563FSB-2	1,100
008	643909-9	BATTERY HOLDER	220
009	251468-5	- FLAT HEAD SCREW M6X22	100
010	766003-1	KEYLESS DRILL CHUCK 10	960
011	125484-2	GEAR ASS'Y	2,130
012	629823-3	DC MOTOR	970
013	911003-8	PAN HEAD SCREW M3X6	100
014	187301-4	HOUSING SET	730
015	263024-9	RUBBER PIN 4	80
A01	784636-0	+- BIT 2-65	160
A02	414938-7	BATTERY COVER	50
A03	***DC1414	DC1414 BATTERY CHARGER	2,940
A04	192600-1	HIGH CAPACITY BATTERY 1422 SET	7,940

SERVICE DRAWING

MODEL NO. 8416

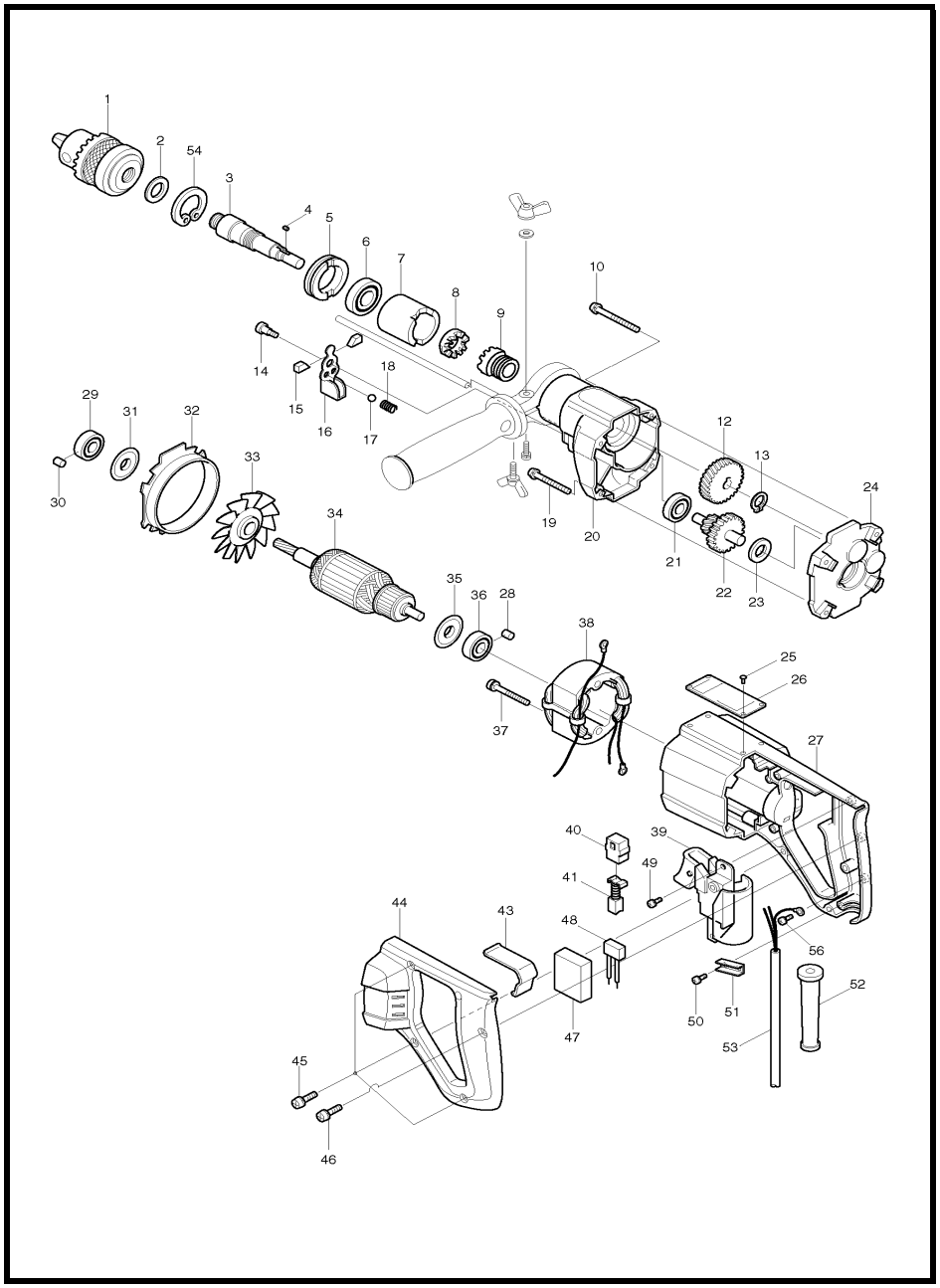

MODEL 8416

ITEM	PARTS ID	DESCRIPTION	PRICE/BAHT
001	192877-8	DRILL CHUCK S13	2,550
002	423040-5	RUBBER PLATE	80
003	322422-7	SPINDLE	1,490
004	254201-4	KEY 4	80
005	285819-0	BEARING RETAINER 22-33	170
006	211201-7	BALL BEARING 6002LLB	560
007	314101-1	CHANGE RING	1,360
008	223124-7	CAM A	820
009	223125-5	CAM B	960
010	911266-6	PAN HEAD SCREW M5X45	50
012	221662-3	HELICAL GEAR 36	760
013	961006-2	RETAINING RING S-10	20
014	251283-7	+ PAN HEAD SCREW M5	130
015	423030-8	RUBBER PLUG	80
016	164512-8	CHANGE LEVER	320
017	216002-8	STEEL BALL 4.8	20
018	231026-3	COMPRESSION SPRING 4	70
019	911256-9	PAN HEAD SCREW M5X35	40
020	159488-2	GEAR HOUSING COMPLETE	2,080
021	211042-1	BALL BEARING 608Z	290
022	226049-4	GEAR COMPLETE 13-43	1,380
023	253330-0	THIN WASHER 10	30
024	156580-5	GEAR HOUSING COVER	1,070
025	953106-2	RIVET 0-5	20
027	151897-1	MOTOR HOUSING COMPLETE	2,380
028	263002-9	RUBBER PIN 4	30
029	211042-1	BALL BEARING 608Z	290
030	263002-9	RUBBER PIN 4	30
031	213002-9	DUST SEAL 8	120
032	343313-9	BAFFLE PLATE	150
034	512693-6	ARMATURE ASS'Y 220V	
035	213002-9	DUST SEAL 8	120
036	211042-1	BALL BEARING 608Z	290
037	911265-8	PAN HEAD SCREW M5X40	80
038	522498-6	FIELD ASS'Y 220V	
040	643551-6	BRUSH HOLDER 5-8	130
041	B-80248	CARBON BRUSH SET CB-55A	
043	341402-4	HOOK	190
044	151896-3	HANDLE COVER COMPLETE	680
045	911126-2	PAN HEAD SCREW M4X16	30
046	911141-6	PAN HEAD SCREW M4X22	20
049	911101-8	PAN HEAD SCREW M4X6	20
050	911133-5	PAN HEAD SCREW M4X18	50
051	687053-2	STRAIN RELIEF	70
052	682504-0	CORD GUARD 10-85	190
053	691134-6	POWER SUPPLY CORD 0.75-3-2.5	1,010
054	962155-8	RETAINING RING R-37	110
056	652014-1	PAN HEAD SCREW M4X8	30
400	273627-1	GRIP	550
406	321059-7	DEPTH GAUGE	100
407	941202-8	FLAT WASHER 8	50
409	921472-5	HEX. BOLT M8X50	70

ITEM	PARTS ID	DESCRIPTION	PRICE/BAHT
500	122428-3	GRIP ASS'Y	710

SERVICE DRAWING

MODEL NO. 8419B

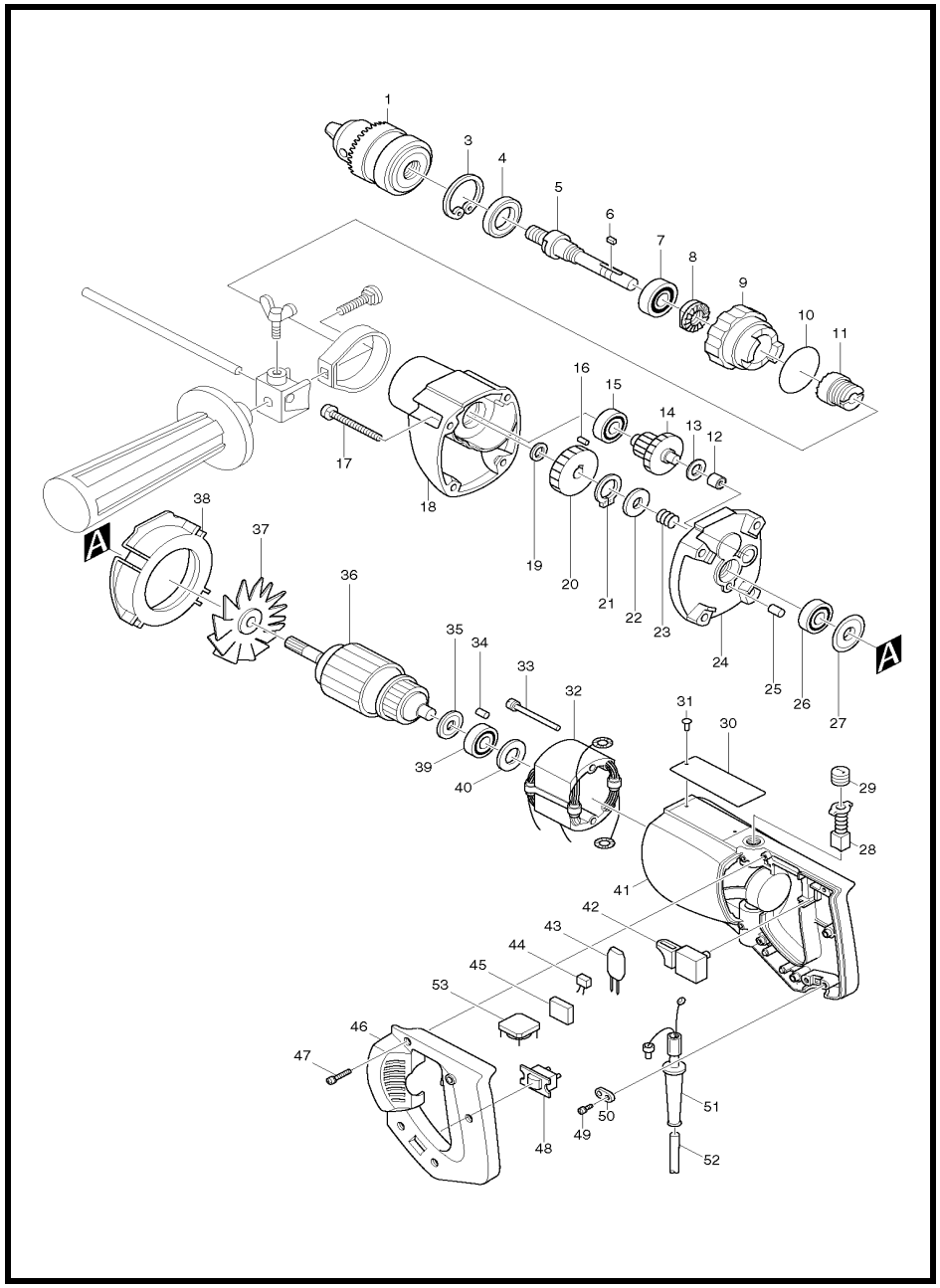

MODEL 8419B

ITEM	PARTS ID	DESCRIPTION	PRICE/BAHT
001	192877-8	DRILL CHUCK S13	2,550
003	962151-6	RETAINING RING R-32	90
004	213301-9	DUST SEAL 20	150
005	325501-0	SPINDLE	1,610
006	254201-4	KEY 4	80
007	211201-7	BALL BEARING 6002LLB	560
008	223023-3	CAM A	730
009	314098-4	CHANGE RING	1,600
010	213458-6	O RING 34	50
011	223024-1	CAM (B)	830
012	212003-4	NEEDLE BEARING 810	290
013	253139-0	FLAT WASHER 8	50
014	226026-6	GEAR COMPLETE 13-41	1,440
015	211031-6	BALL BEARING 608LLB	190
016	263002-9	RUBBER PIN 4	30
017	911261-6	PAN HEAD SCREW M5X40	50
018	156445-1	GEAR HOUSING	2,550
019	253084-9	FLAT WASHER 12	40
020	221236-0	SPUR GEAR 38	800
021	961006-2	RETAINING RING S-10	20
022	253311-4	THIN WASHER 10	80
023	231131-6	COMPRESSION SPRING 11	30
024	156330-8	GEAR HOUSING COVER COMPLETE	1,380
025	263005-3	RUBBER PIN 6	30
026	211031-6	BALL BEARING 608LLB	190
027	213002-9	DUST SEAL 8	120
028	B-80232	CARBON BRUSH SET CB-51A	
029	643550-8	BRUSH HOLDER CAP 5-8	100
031	953106-2	RIVET 0-5	20
032	522265-9	FIELD ASS'Y 220V	
033	911275-5	PAN HEAD SCREW M5X50	80
034	263014-2	RUBBER PIN 4	40
035	681613-2	INSULATION WASHER	80
038	411234-4	BAFFLE PLATE	160
039	211031-6	BALL BEARING 608LLB	190
040	253192-6	FLAT WASHER 14	70
041	159087-0	MOTOR HOUSING	1,860
042	650224-4	SWITCH SGEL115CDY-10	360
043	631011-0	DIODE S3V60ZM-H	1,130
045	685718-0	SPONGE SHEET	50
046	419468-3	HANDLE COVER	390
047	911153-9	PAN HEAD SCREW M4X28	30
048	651600-5	SWITCH SS106A	390
049	911133-5	PAN HEAD SCREW M4X18	50
050	687001-1	STRAIN RELIEF	50
051	682504-0	CORD GUARD 10-85	190
052	691015-4	POWER SUPPLY CORD 0.75-2-2.5	740
400	321059-7	DEPTH GAUGE	100
401	924216-2	WING BOLT M5X15	80
403	341643-2	BELT	310
404	315261-2	GRIP BASE	310
406	273479-0	GRIP 37	480

SERVICE DRAWING

MODEL NO. 8420V

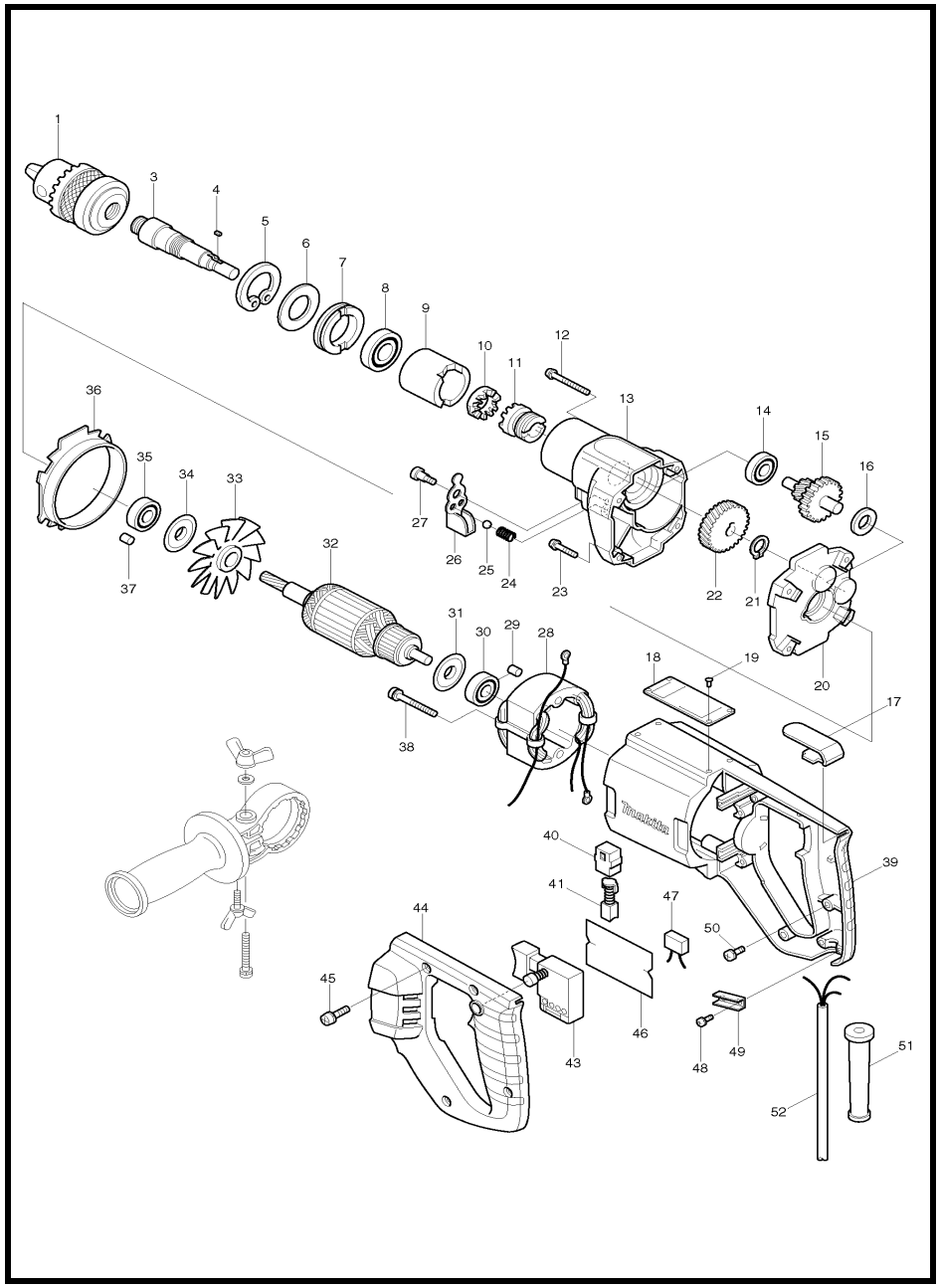

MODEL 8420V

ITEM	PARTS ID	DESCRIPTION	PRICE/BAHT
001	192877-8	DRILL CHUCK S13	2,550
003	322422-7	SPINDLE	1,490
004	254201-4	KEY 4	80
005	962155-8	RETAINING RING R-37	110
006	423040-5	RUBBER PLATE	80
007	285819-0	BEARING RETAINER 22-33	170
008	211201-7	BALL BEARING 6002LLB	560
009	314101-1	CHANGE RING	1,360
010	223124-7	CAM A	820
011	223125-5	CAM B	960
012	911266-6	PAN HEAD SCREW M5X45	50
013	159488-2	GEAR HOUSING COMPLETE	2,080
014	211042-1	BALL BEARING 608Z	290
015	226049-4	GEAR COMPLETE 13-43	1,380
016	253330-0	THIN WASHER 10	30
017	341558-3	HOOK	230
018	858199-3	NAME PLATE 8420V	120
020	156580-5	GEAR HOUSING COVER	1,070
021	961006-2	RETAINING RING S-10	20
022	221662-3	HELICAL GEAR 36	760
023	911256-9	PAN HEAD SCREW M5X35	40
024	231026-3	COMPRESSION SPRING 4	70
025	216002-8	STEEL BALL 4.8	20
026	164512-8	CHANGE LEVER	320
027	251283-7	+ PAN HEAD SCREW M5	130
029	263002-9	RUBBER PIN 4	30
030	211042-1	BALL BEARING 608Z	290
031	213002-9	DUST SEAL 8	120
033	240007-6	FAN 68	160
034	213002-9	DUST SEAL 8	120
035	211042-1	BALL BEARING 608Z	290
036	343313-9	BAFFLE PLATE	150
037	263002-9	RUBBER PIN 4	30
038	911275-5	PAN HEAD SCREW M5X50	80
039	159891-7	MOTOR HOUSING COMPLETE	2,760
040	643605-9	BRUSH HOLDER	100
043	651294-6	SWITCH SGEL108CV-1A	2,200
044	154425-1	HANDLE COVER COMPLETE	1,090
045	911141-6	PAN HEAD SCREW M4X22	20
046	680203-8	INSULATION PAPER	160
048	911133-5	PAN HEAD SCREW M4X18	50
049	687053-2	STRAIN RELIEF	70
050	652014-1	PAN HEAD SCREW M4X8	30
051	682504-0	CORD GUARD 10-85	190
052	691134-6	POWER SUPPLY CORD 0.75-3-2.5	1,010
401	941202-8	FLAT WASHER 8	50
402	273627-1	GRIP	550
403	321059-7	DEPTH GAUGE	100
404	924226-9	WING BOLT M5X20	80
405	921472-5	HEX. BOLT M8X50	70
410	824650-5	PLASTIC CARRYING CASE	1,180
411	410102-8	KEY HOLDER	80

SERVICE DRAWING

MODEL NO. 9005B

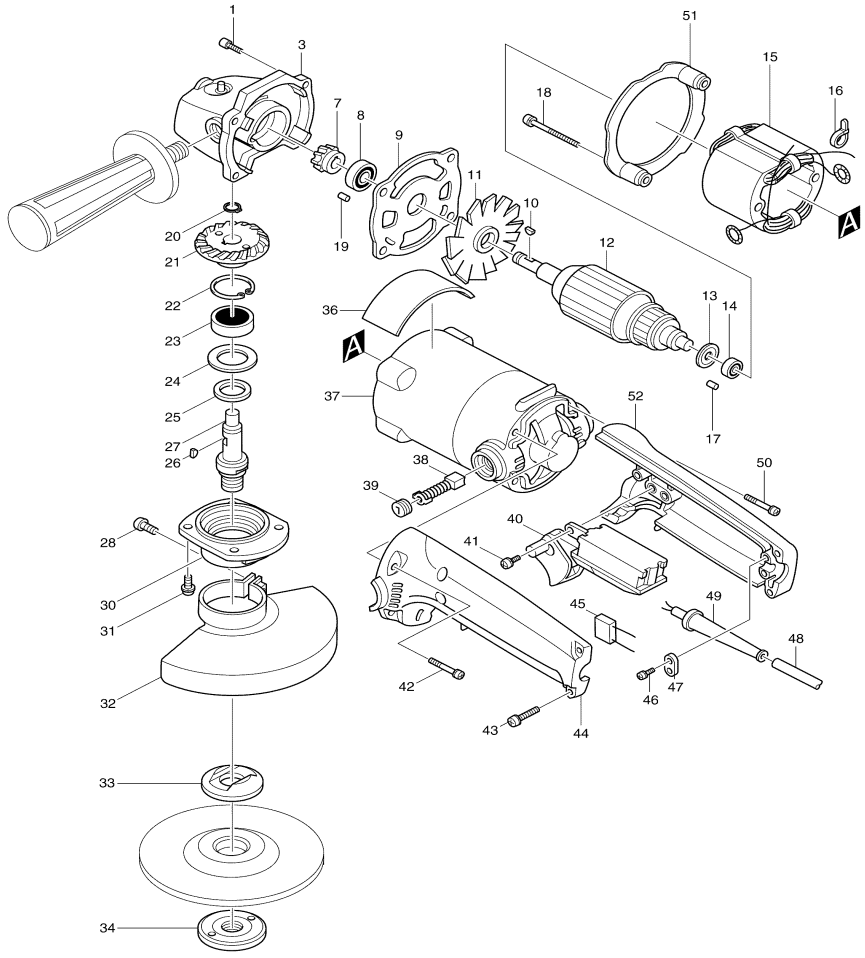

MODEL 9005B

ITEM	PARTS ID	DESCRIPTION	PRICE/BAHT
001	911241-2	PAN HEAD SCREW M5X25	110
002	341680-6	TOOL REST	290
003	159710-7	GEAR HOUSING COMPLETE	1,880
007	181737-9	SPIRAL BEVEL GEAR SET	1,620
007	187603-8	SPIRAL BEVEL GEAR SET	690
008	211088-7	BALL BEARING 6000DDW	300
009	341681-4	PLATE	210
010	254002-0	WOODRUFF KEY 3	80
011	241517-6	FAN 70	930
012	516093-2	ARMATURE ASS'Y 220V	
013	681613-2	INSULATION WASHER	80
014	210005-4	BALL BEARING 608DDW	240
016	687010-0	BAND	30
017	263014-2	RUBBER PIN 4	40
018	911290-9	PAN HEAD SCREW M5X65	100
019	263002-9	RUBBER PIN 4	30
020	961052-5	RETAINING RING S-12	40
021	181737-9	SPIRAL BEVEL GEAR SET	1,620
021	187603-8	SPIRAL BEVEL GEAR SET	690
022	962151-6	RETAINING RING R-32	90
023	211129-9	BALL BEARING 6201DDW	300
024	267126-3	FLAT WASHER 22	120
025	443051-4	FELT RING 20	50
026	254002-0	WOODRUFF KEY 3	80
027	321544-0	SPINDLE	830
028	251259-4	+ PAN HEAD SCREW M5X16	80
030	315282-4	BEARING BOX	710
031	266148-0	HEX. SOCKET HEAD BOLT M4X14	80
032	135549-2	WHEEL COVER ASS'Y	690
033	224029-4	INNER FLANGE 40	310
034	224521-0	LOCK NUT 16-40	300
037	156734-4	MOTOR HOUSING	1,660
038	B-80298	CARBON BRUSH SET CB-100A	
039	643600-9	BRUSH HOLDER CAP 6-10	70
040	651128-3	SWITCH C3D-15AS	1,440
041	911113-1	PAN HEAD SCREW M4X10	30
042	911248-8	PAN HEAD SCREW M5X28	50
043	911143-2	PAN HEAD SCREW M4X22	110
044	182853-0	HANDLE SET	920
046	265995-6	TAPPING SCREW 4X18	40
047	687053-2	STRAIN RELIEF	70
048	691216-4	POWER SUPPLY CORD 1.25-2-2.5	950
049	682505-8	CORD GUARD 10-90	150
050	911248-8	PAN HEAD SCREW M5X28	50
051	411876-4	BAFFLE PLATE	270
052	182853-0	HANDLE SET	920
400	152492-0	GRIP 36 COMPLETE	230
401	794046-3	DEPRESSED CENTER WHEEL 125-2	1,990
402	782412-6	LOCK NUT WRENCH 28	230
903	687051-6	STRAIN RELIEF	80

SERVICE DRAWING

MODEL NO. 9005N

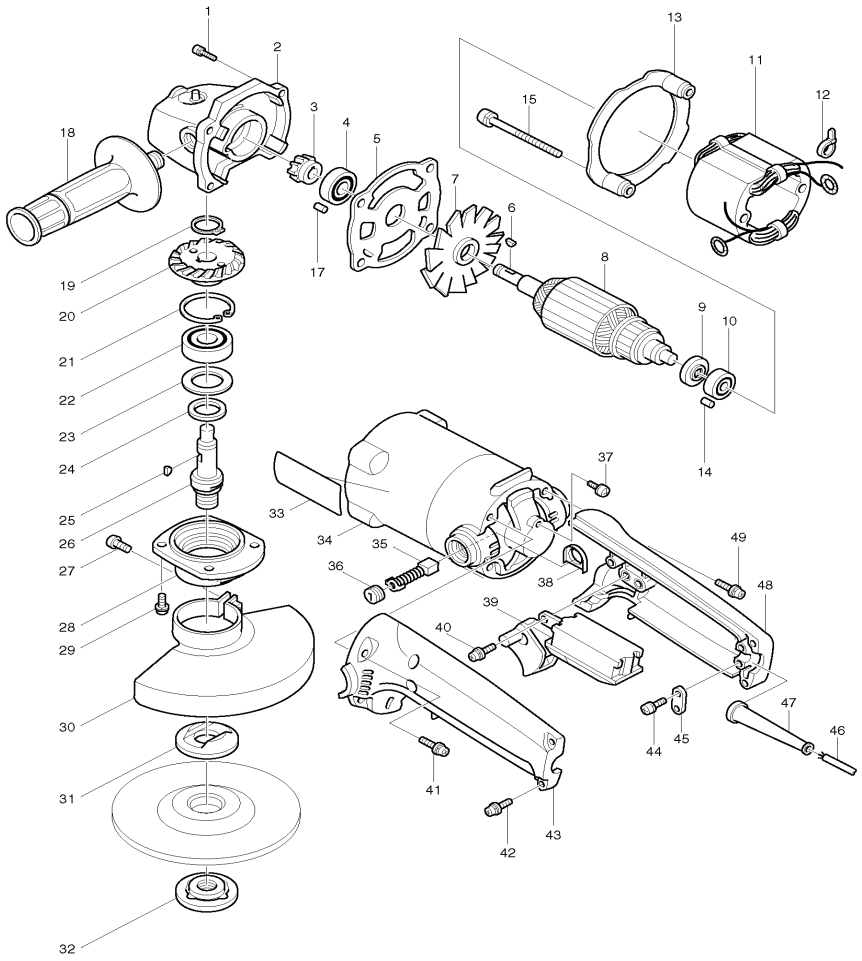

MODEL 9005N

ITEM	PARTS ID	DESCRIPTION	PRICE/BAHT
001	911236-5	PAN HEAD SCREW M5X22	30
002	159710-7	GEAR HOUSING COMPLETE	1,880
003	181737-9	SPIRAL BEVEL GEAR SET	1,620
003	187603-8	SPIRAL BEVEL GEAR SET	690
004	211088-7	BALL BEARING 6000DDW	300
005	341681-4	PLATE	210
006	254002-0	WOODRUFF KEY 3	80
009	681613-2	INSULATION WASHER	80
010	210005-4	BALL BEARING 608DDW	240
011	522833-8	FIELD ASS'Y 220V	
012	687010-0	BAND	30
013	411876-4	BAFFLE PLATE	270
014	263002-9	RUBBER PIN 4	30
015	911290-9	PAN HEAD SCREW M5X65	100
017	263002-9	RUBBER PIN 4	30
018	152492-0	GRIP 36 COMPLETE	230
019	961052-5	RETAINING RING S-12	40
020	181737-9	SPIRAL BEVEL GEAR SET	1,620
020	187603-8	SPIRAL BEVEL GEAR SET	690
021	962151-6	RETAINING RING R-32	90
022	211129-9	BALL BEARING 6201DDW	300
023	267126-3	FLAT WASHER 22	120
024	443051-4	FELT RING 20	50
025	254002-0	WOODRUFF KEY 3	80
026	321544-0	SPINDLE	830
027	251259-4	+ PAN HEAD SCREW M5X16	80
028	315282-4	BEARING BOX	710
029	266148-0	HEX. SOCKET HEAD BOLT M4X14	80
030	135549-2	WHEEL COVER ASS'Y	690
031	224029-4	INNER FLANGE 40	310
032	224521-0	LOCK NUT 16-40	300
034	159980-8	MOTOR HOUSING COMPLETE	3,600
035	B-80298	CARBON BRUSH SET CB-100A	
036	643600-9	BRUSH HOLDER CAP 6-10	70
037	652014-1	PAN HEAD SCREW M4X8	30
038	681012-8	RESIN WASHER	100
040	911104-2	PAN HEAD SCREW M4X6	30
041	911243-8	PAN HEAD SCREW M5X25	30
042	911143-2	PAN HEAD SCREW M4X22	110
043	181513-1	HANDLE SET	1,430
044	911133-5	PAN HEAD SCREW M4X18	50
045	687000-3	STRAIN RELIEF	40
046	691135-4	POWER SUPPLY CORD 0.75-3-2.5	730
047	682505-8	CORD GUARD 10-90	150
048	181513-1	HANDLE SET	1,430
049	911243-8	PAN HEAD SCREW M5X25	30
A01	782412-6	LOCK NUT WRENCH 28	230

SERVICE DRAWING

MODEL NO. 9006B

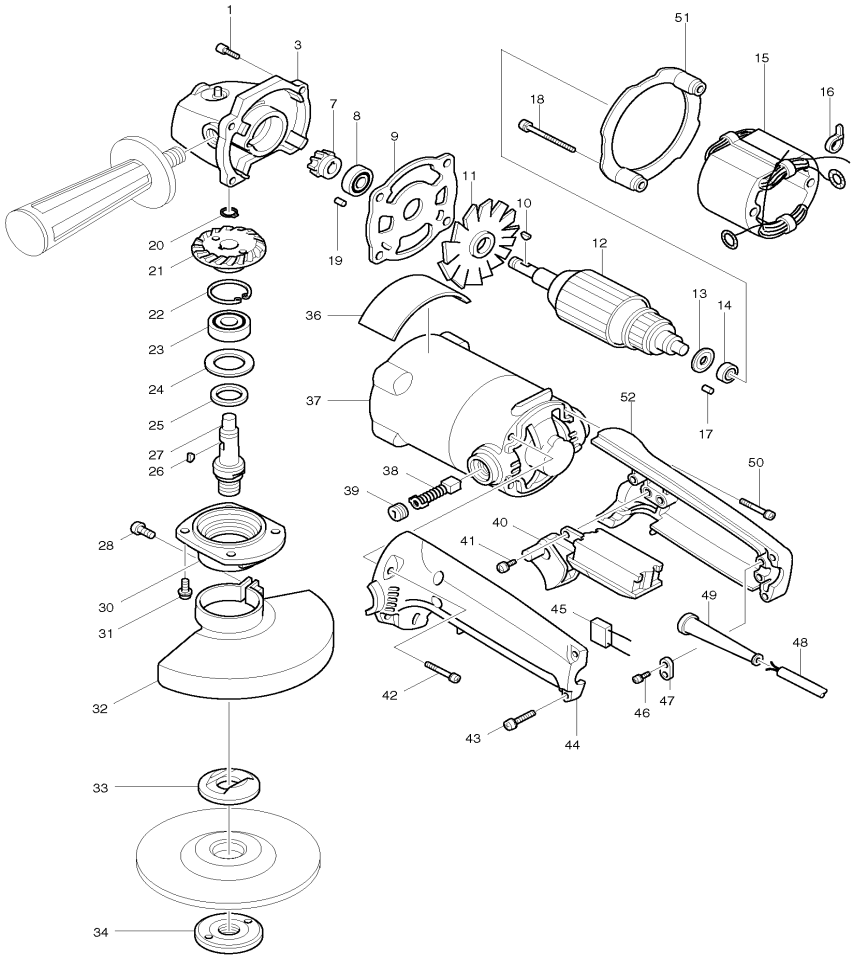

MODEL 9006B

ITEM	PARTS ID	DESCRIPTION	PRICE/BAHT
001	911241-2	PAN HEAD SCREW M5X25	110
002	341680-6	TOOL REST	290
003	159710-7	GEAR HOUSING COMPLETE	1,880
007	181737-9	SPIRAL BEVEL GEAR SET	1,620
007	187603-8	SPIRAL BEVEL GEAR SET	690
008	211088-7	BALL BEARING 6000DDW	300
009	341681-4	PLATE	210
010	254002-0	WOODRUFF KEY 3	80
013	681613-2	INSULATION WASHER	80
014	210005-4	BALL BEARING 608DDW	240
016	687010-0	BAND	30
017	263014-2	RUBBER PIN 4	40
018	911290-9	PAN HEAD SCREW M5X65	100
019	263002-9	RUBBER PIN 4	30
020	961052-5	RETAINING RING S-12	40
021	181737-9	SPIRAL BEVEL GEAR SET	1,620
021	187603-8	SPIRAL BEVEL GEAR SET	690
022	962151-6	RETAINING RING R-32	90
023	211129-9	BALL BEARING 6201DDW	300
024	267126-3	FLAT WASHER 22	120
025	443051-4	FELT RING 20	50
026	254002-0	WOODRUFF KEY 3	80
027	321544-0	SPINDLE	830
028	251259-4	+ PAN HEAD SCREW M5X16	80
030	315282-4	BEARING BOX	710
031	266148-0	HEX. SOCKET HEAD BOLT M4X14	80
032	133533-1	WHEEL COVER 150 ASS'Y	700
033	224029-4	INNER FLANGE 40	310
034	224521-0	LOCK NUT 16-40	300
036	854291-3	NAME PLATE 9006B	100
037	156734-4	MOTOR HOUSING	1,660
038	B-80298	CARBON BRUSH SET CB-100A	
039	643600-9	BRUSH HOLDER CAP 6-10	70
040	651128-3	SWITCH C3D-15AS	1,440
042	911248-8	PAN HEAD SCREW M5X28	50
043	911143-2	PAN HEAD SCREW M4X22	110
044	182853-0	HANDLE SET	920
046	265995-6	TAPPING SCREW 4X18	40
047	687053-2	STRAIN RELIEF	70
048	691216-4	POWER SUPPLY CORD 1.25-2-2.5	950
049	682505-8	CORD GUARD 10-90	150
050	911248-8	PAN HEAD SCREW M5X28	50
051	411876-4	BAFFLE PLATE	270
052	182853-0	HANDLE SET	920
053	687051-6	STRAIN RELIEF	80
400	152492-0	GRIP 36 COMPLETE	230
401	741448-4	DEPRESSED CENTER WHEEL 150-2	530

SERVICE DRAWING

MODEL NO. 9006N

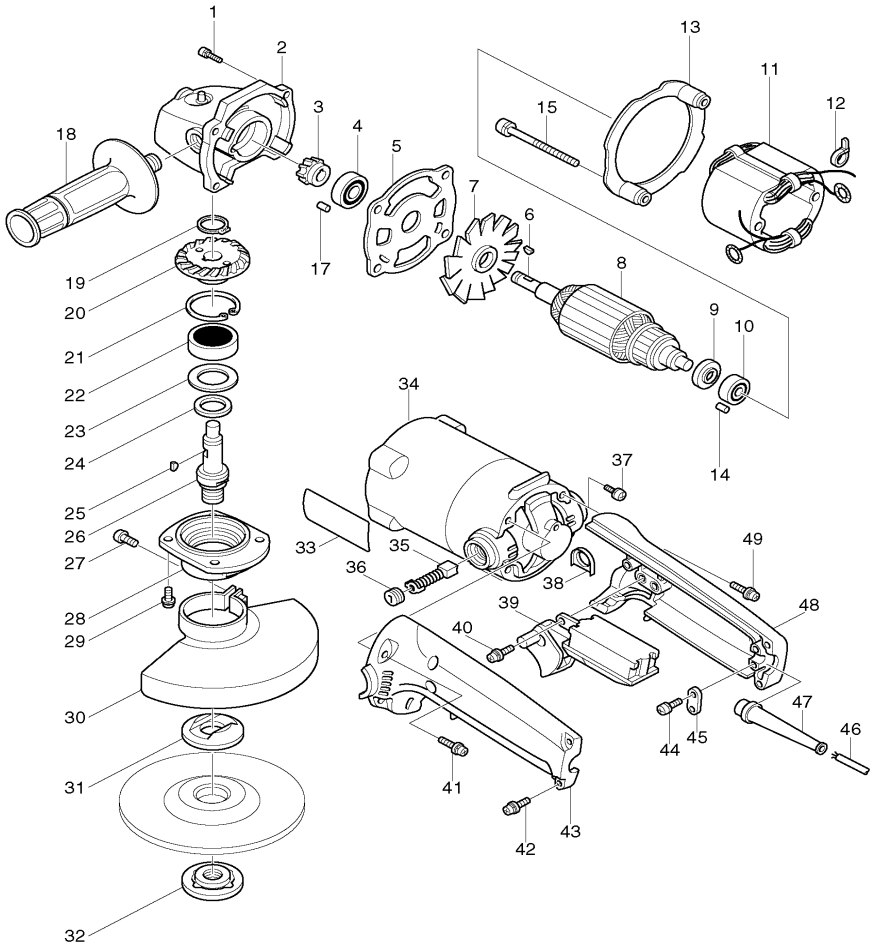

MODEL 9006N

ITEM	PARTS ID	DESCRIPTION	PRICE/BAHT
001	911236-5	PAN HEAD SCREW M5X22	30
002	159710-7	GEAR HOUSING COMPLETE	1,880
003	181737-9	SPIRAL BEVEL GEAR SET	1,620
003	187603-8	SPIRAL BEVEL GEAR SET	690
004	211088-7	BALL BEARING 6000DDW	300
005	341681-4	PLATE	210
006	254002-0	WOODRUFF KEY 3	80
008	516093-2	ARMATURE ASS'Y 220V	
009	681613-2	INSULATION WASHER	80
010	210005-4	BALL BEARING 608DDW	240
011	522833-8	FIELD ASS'Y 220V	
012	687010-0	BAND	30
013	411876-4	BAFFLE PLATE	270
014	263002-9	RUBBER PIN 4	30
015	911290-9	PAN HEAD SCREW M5X65	100
017	263002-9	RUBBER PIN 4	30
018	152492-0	GRIP 36 COMPLETE	230
019	961052-5	RETAINING RING S-12	40
020	181737-9	SPIRAL BEVEL GEAR SET	1,620
020	187603-8	SPIRAL BEVEL GEAR SET	690
021	962151-6	RETAINING RING R-32	90
022	211129-9	BALL BEARING 6201DDW	300
023	267126-3	FLAT WASHER 22	120
024	443051-4	FELT RING 20	50
025	254002-0	WOODRUFF KEY 3	80
026	321544-0	SPINDLE	830
027	251259-4	+ PAN HEAD SCREW M5X16	80
028	315282-4	BEARING BOX	710
029	266148-0	HEX. SOCKET HEAD BOLT M4X14	80
030	135549-2	WHEEL COVER ASS'Y	690
031	224029-4	INNER FLANGE 40	310
032	224521-0	LOCK NUT 16-40	300
034	159980-8	MOTOR HOUSING COMPLETE	3,600
035	B-80298	CARBON BRUSH SET CB-100A	
036	643600-9	BRUSH HOLDER CAP 6-10	70
037	652014-1	PAN HEAD SCREW M4X8	30
038	681012-8	RESIN WASHER	100
039	651033-4	SWITCH HPAHR2-35S	1,410
040	911104-2	PAN HEAD SCREW M4X6	30
041	911243-8	PAN HEAD SCREW M5X25	30
042	911143-2	PAN HEAD SCREW M4X22	110
043	181513-1	HANDLE SET	1,430
044	911133-5	PAN HEAD SCREW M4X18	50
045	687000-3	STRAIN RELIEF	40
046	691135-4	POWER SUPPLY CORD 0.75-3-2.5	730
047	682505-8	CORD GUARD 10-90	150
048	181513-1	HANDLE SET	1,430
049	911243-8	PAN HEAD SCREW M5X25	30
A01	782412-6	LOCK NUT WRENCH 28	230

SERVICE DRAWING

MODEL NO. 9015B

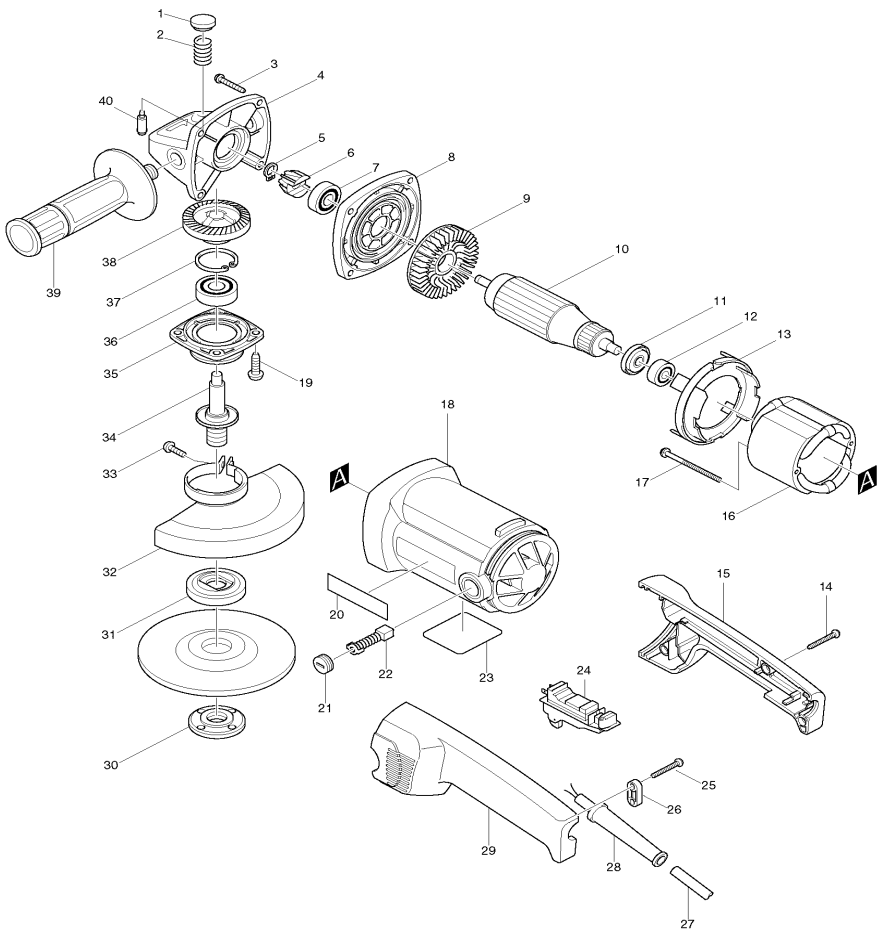

MODEL 9015B

ITEM	PARTS ID	DESCRIPTION	PRICE/BAHT
001	416449-8	PIN CAP	100
002	233089-5	COMPRESSION SPRING 12	60
003	266173-1	TAPPING SCREW 5X30	60
004	153374-9	GEAR HOUSING COMPLETE	1,440
005	961003-8	RETAINING RING S-7	20
006	183053-5	SPIRAL BEVEL GEAR SET	1,720
007	211131-2	BALL BEARING 6001DDW	310
008	317323-2	GEAR HOUSING COVER	820
009	240010-7	FAN 70	210
010	516333-8	ARMATURE ASS'Y 220V	
011	681644-1	INSULATION WASHER	60
012	210005-4	BALL BEARING 608DDW	240
013	416448-0	BAFFLE PLATE	120
014	265995-6	TAPPING SCREW 4X18	40
015	182990-0	HANDLE SET	830
016	522838-8	FIELD ASS'Y 220-240V	
017	266029-8	TAPPING SCREW 5X65	130
018	183159-9	MOTOR HOUSING	1,270
019	265096-0	PAN HEAD SCREW M5X16	50
021	643750-0	BRUSH HOLDER CAP	70
022	B-80379	CARBON BRUSH SET CB-303A	190
025	265995-6	TAPPING SCREW 4X18	40
026	687052-4	STRAIN RELIEF	80
027	691015-4	POWER SUPPLY CORD 0.75-2-2.5	740
028	682505-8	CORD GUARD 10-90	150
029	182990-0	HANDLE SET	830
030	224554-5	LOCK NUT 14-45	250
031	224415-9	INNER FLANGE 42	200
032	125097-9	WHEEL COVER ASS'Y	380
033	251391-4	PAN HEAD SCREW M5X16	40
034	152572-2	SPINDLE COMPLETE	870
035	316991-8	BEARING BOX	550
036	211129-9	BALL BEARING 6201DDW	300
037	962151-6	RETAINING RING R-32	90
038	183053-5	SPIRAL BEVEL GEAR SET	1,720
039	152492-0	GRIP 36 COMPLETE	230
040	256446-0	PIN 6	150
041	262086-4	RUBBER RING 29	80
042	442126-6	GASKET	80
A01	782407-9	LOCK NUT WRENCH 35	320

SERVICE DRAWING

MODEL NO. 9016B

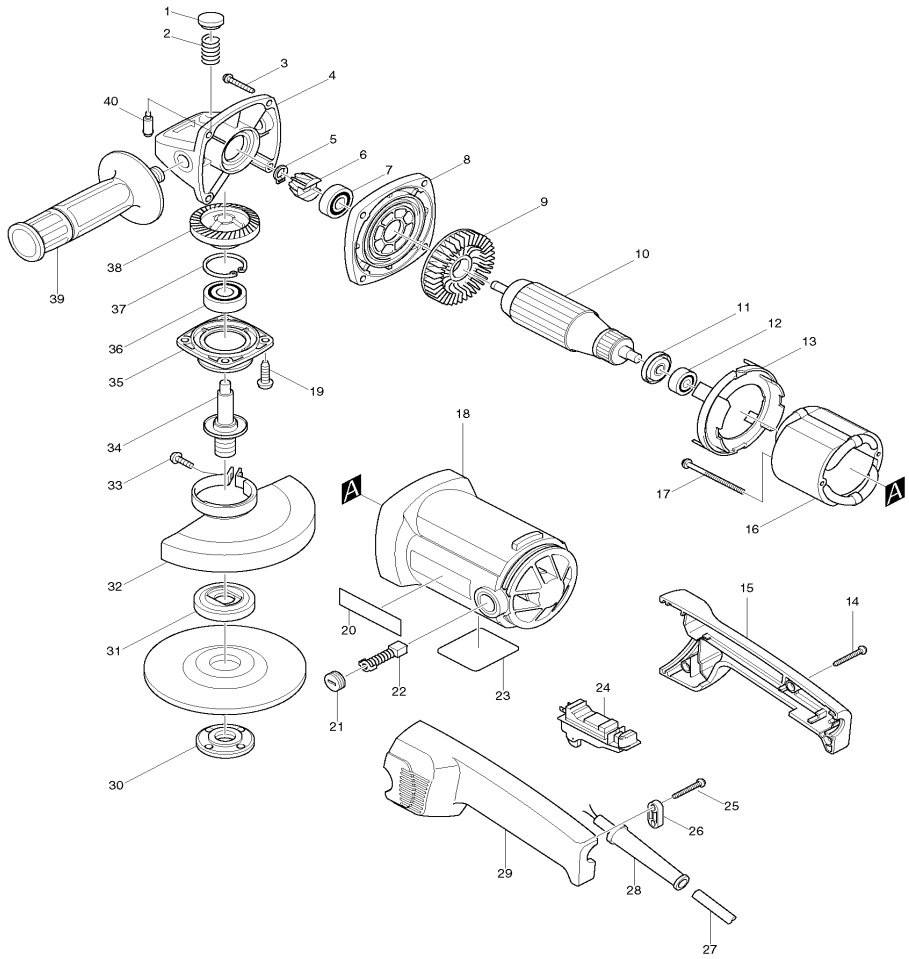

MODEL 9016B

ITEM	PARTS ID	DESCRIPTION	PRICE/BAHT
001	416449-8	PIN CAP	100
002	233089-5	COMPRESSION SPRING 12	60
003	266173-1	TAPPING SCREW 5X30	60
004	153374-9	GEAR HOUSING COMPLETE	1,440
005	961003-8	RETAINING RING S-7	20
006	226756-9	SPIRAL BEVEL GEAR 11	850
007	211131-2	BALL BEARING 6001DDW	310
008	317323-2	GEAR HOUSING COVER	820
010	516333-8	ARMATURE ASS'Y 220V	
011	681644-1	INSULATION WASHER	60
012	210005-4	BALL BEARING 608DDW	240
013	416448-0	BAFFLE PLATE	120
014	265995-6	TAPPING SCREW 4X18	40
015	182990-0	HANDLE SET	830
016	522838-8	FIELD ASS'Y 220-240V	
017	266029-8	TAPPING SCREW 5X65	130
018	183159-9	MOTOR HOUSING	1,270
019	265096-0	PAN HEAD SCREW M5X16	50
021	643750-0	BRUSH HOLDER CAP	70
022	B-80379	CARBON BRUSH SET CB-303A	190
024	650101-0	SWITCH TG08-1100-011	1,300
025	265995-6	TAPPING SCREW 4X18	40
026	687053-2	STRAIN RELIEF	70
027	691015-4	POWER SUPPLY CORD 0.75-2-2.5	740
028	682505-8	CORD GUARD 10-90	150
029	182990-0	HANDLE SET	830
030	224554-5	LOCK NUT 14-45	250
031	224415-9	INNER FLANGE 42	200
032	134961-3	WHEEL COVER ASS'Y	730
033	251391-4	PAN HEAD SCREW M5X16	40
034	152572-2	SPINDLE COMPLETE	870
035	316991-8	BEARING BOX	550
036	211129-9	BALL BEARING 6201DDW	300
037	962151-6	RETAINING RING R-32	90
038	226754-3	SPIRAL BEVEL GEAR 35	1,370
039	152492-0	GRIP 36 COMPLETE	230
040	256446-0	PIN 6	150
041	262086-4	RUBBER RING 29	80
042	442126-6	GASKET	80
A01	782407-9	LOCK NUT WRENCH 35	320

SERVICE DRAWING

MODEL NO. 903

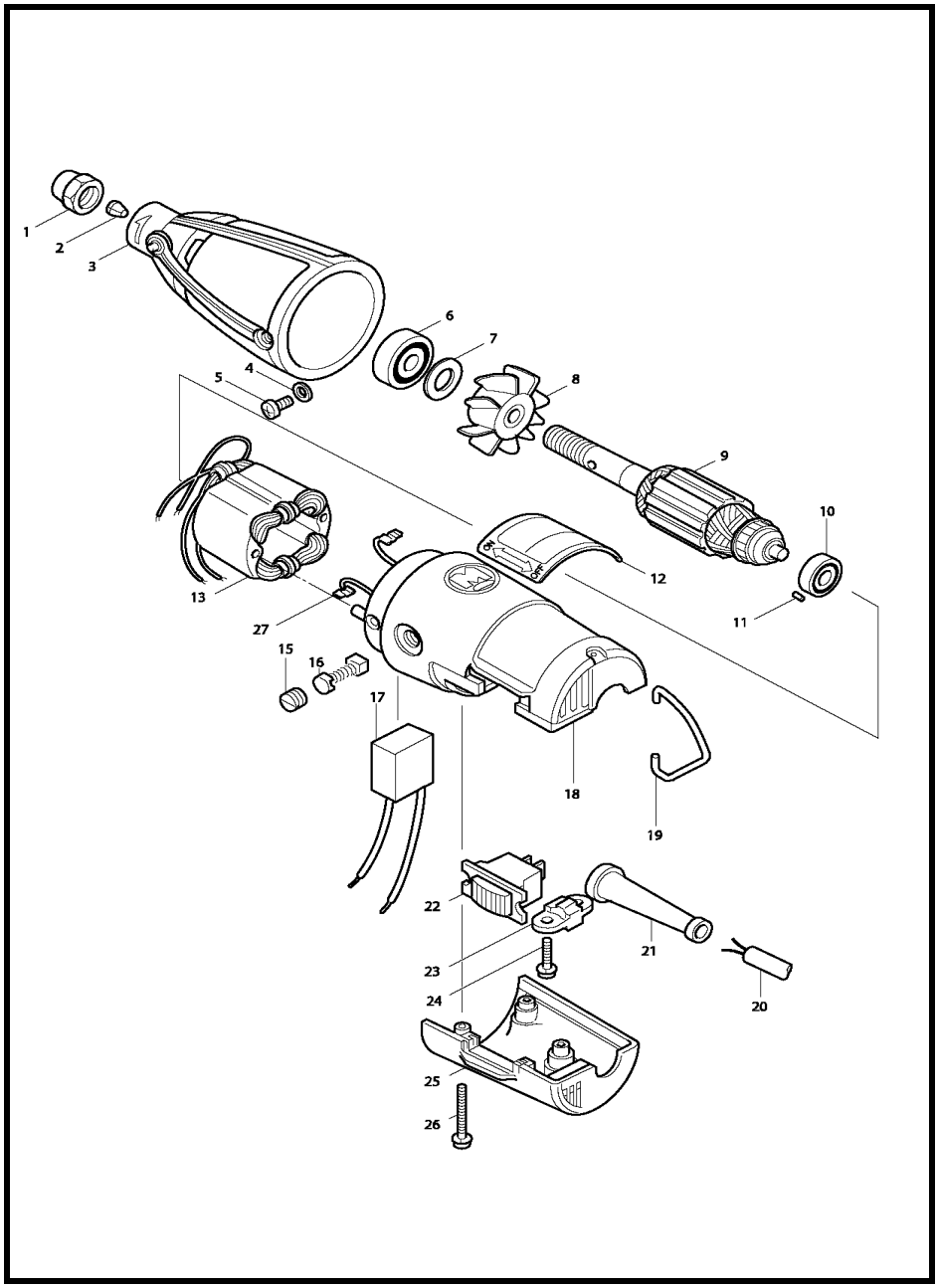

MODEL 903

ITEM	PARTS ID	DESCRIPTION	PRICE/BAHT
001	763609-6	COLLET NUT 3	320
002	763610-1	COLLET CONE 3MM	230
003	156118-6	FRONT COVER	880
004	941052-1	FLAT WASHER 4	20
005	915106-0	BINDING HEAD SCREW M4X8	40
006	211051-0	BALL BEARING 609LLB	240
007	253214-2	FLAT WASHER 9	80
008	241801-9	FAN 40	230
009	515504-4	ARMATURE ASS'Y 220V	
010	211007-3	BALL BEARING 625ZZ	400
011	263002-9	RUBBER PIN 4	30
013	625504-7	FIELD 220V	
015	643500-3	BRUSH HOLDER CAP 5-5	80
016	181019-9	CARBON BRUSH CB-1	
018	156795-4	MOTOR HOUSING	930
019	281203-7	HANGER	150
020	691065-9	POWER SUPPLY CORD 0.75-2-2.5	690
021	682500-8	CORD GUARD 8.5-72	120
022	651600-5	SWITCH SS106A	390
023	687001-1	STRAIN RELIEF	50
024	911133-5	PAN HEAD SCREW M4X18	50
025	411681-9	SWITCH COVER	230
026	911153-9	PAN HEAD SCREW M4X28	30
027	654039-1	TAB	80
400	794011-2	WHEEL POINT SET	1,590
404	158002-1	WRENCH 13	230

SERVICE DRAWING

MODEL NO. 9031

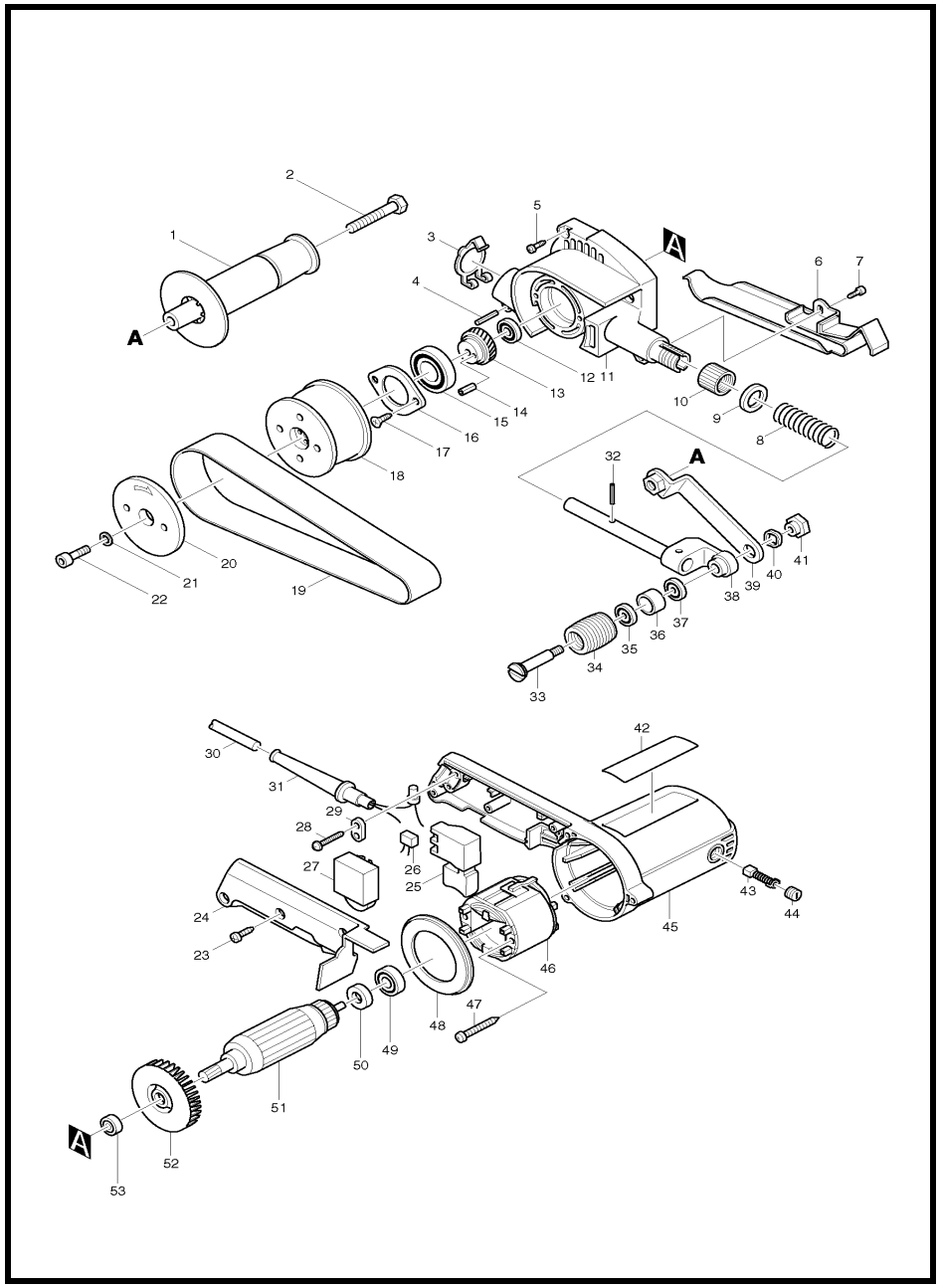

MODEL 9031

ITEM	PARTS ID	DESCRIPTION	PRICE/BAHT
001	152490-4	GRIP 36 COMPLETE	230
003	286241-4	CAP 30	190
004	951116-3	SPRING PIN 4-20	30
005	265999-8	TAPPING SCREW 4X25	30
006	342152-4	FLAT SHOE	490
007	266035-3	TAPPING SCREW BIND CT 5X12	50
008	231056-4	COMPRESSION SPRING 13	100
009	253052-2	FLAT WASHER 12	80
010	252605-4	WING NUT M16	230
011	159748-2	GEAR HOUSING COMPLETE	3,090
012	211023-5	BALL BEARING 607LB	320
013	226435-9	HELICAL GEAR 35	1,030
014	258009-8	SPRING PIN 3.5-12	30
015	211331-4	BALL BEARING 6904DDW	680
016	285830-2	BEARING RETAINER 44	150
017	266058-1	TAPPING SCREW CT 4X12	20
018	222129-4	PULLEY 33-64	1,210
019	A-23880	BELT 533-AA100 10PC.	1,400
020	415624-3	PULLEY LINER	230
021	941101-4	FLAT WASHER 5	20
022	266067-0	HEX. SOCKET HEAD BOLT M5X20	50
023	265995-6	TAPPING SCREW 4X18	40
024	415635-8	HANDLE COVER	410
025	651263-7	SWITCH SGEL206C	460
027	631677-6	CONTROLLER	1,010
028	265995-6	TAPPING SCREW 4X18	40
029	687053-2	STRAIN RELIEF	70
030	691015-4	POWER SUPPLY CORD 0.75-2-2.5	740
031	682504-0	CORD GUARD 10-85	190
032	951116-3	SPRING PIN 4-20	30
033	322746-1	TOP PULLEY SHAFT	310
034	222130-9	PULLEY 30-25	1,260
035	210015-1	BALL BEARING 688DDW	320
036	331450-1	SLEEVE 12	170
037	210015-1	BALL BEARING 688DDW	320
038	154417-0	ANGLE STAY COMPLETE	4,630
039	165110-1	ARM COMPLETE	190
040	253904-7	WAVE WASHER 12	40
041	252138-9	HEX. NUT M6-17	160
042	857678-8	NAME PLATE 9031	100
043	B-80391	CARBON BRUSH SET CB-411A	
044	643550-8	BRUSH HOLDER CAP 5-8	100
045	159747-4	MOTOR HOUSING COMPLETE	1,360
047	266052-3	TAPPING SCREW 4X60	100
048	415634-0	BAFFLE PLATE	150
049	211028-5	BALL BEARING 627LB	290
050	681614-0	INSULATION WASHER	80
053	210005-4	BALL BEARING 608DDW	240
A01	A-23852	BELT 533-AA40 10PCS	1,640
A02	A-23868	ABRASIVE BELT 30X533 AA60	1,470
A03	A-23874	BELT 533-AA80 10PC.	1,400
A04	A-23880	BELT 533-AA100 10PC.	1,400

SERVICE DRAWING

MODEL NO. 9032

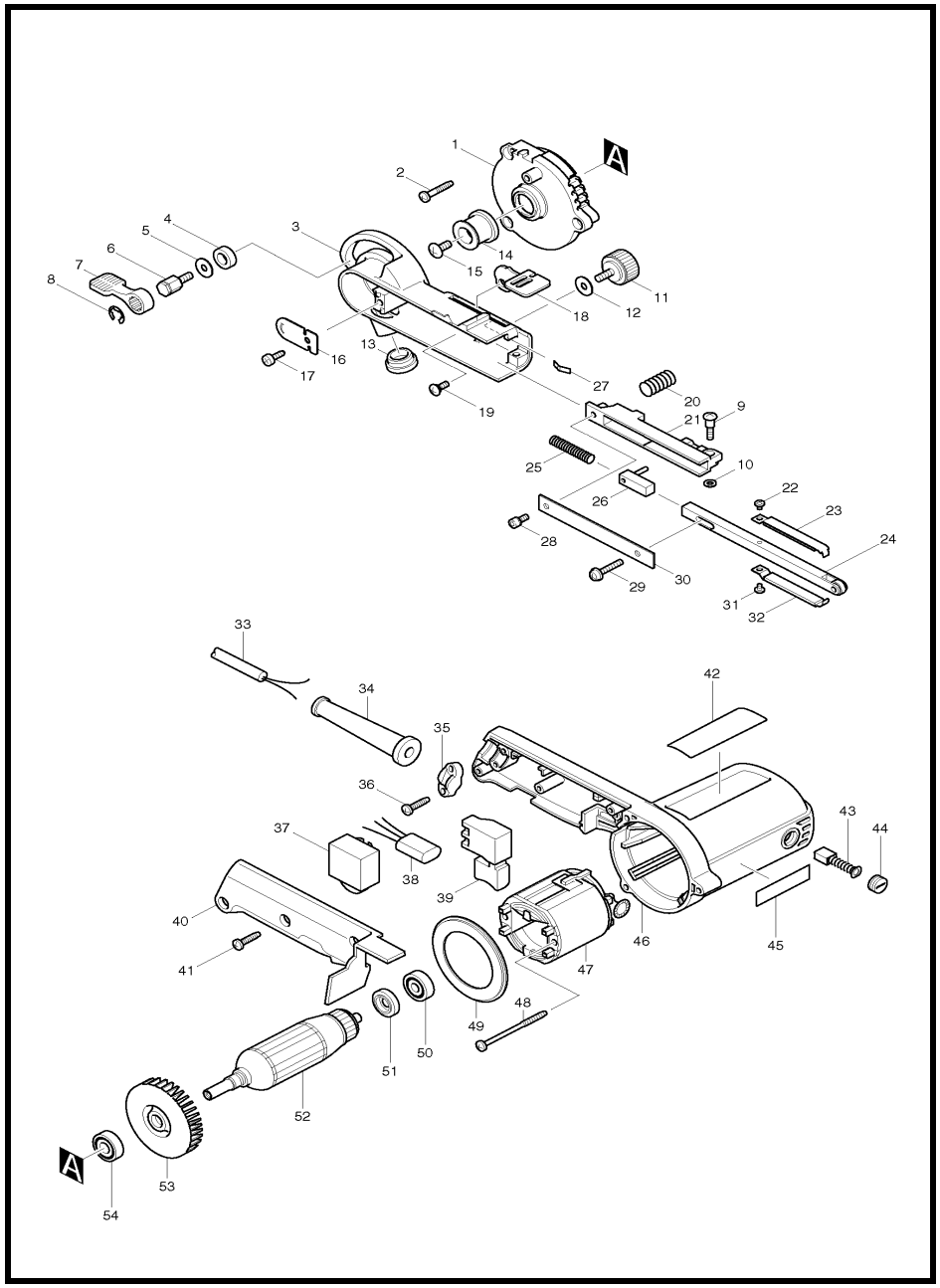

MODEL 9032

ITEM	PARTS ID	DESCRIPTION	PRICE/BAHT
001	317523-4	BRACKET	1,190
002	265999-8	TAPPING SCREW 4X25	30
003	153308-2	PULLEY COVER COMPLETE	1,590
004	257249-5	RING 9	150
005	253807-5	FLAT WASHER 5	40
006	265494-8	HEX. BOLT M5X13	210
007	272229-0	LEVER 40	290
008	961014-3	STOP RING E-8	30
009	265090-2	+ PAN HEAD SCREW M4X20	100
010	941052-1	FLAT WASHER 4	20
011	265751-4	THUMB SCREW M5X13	130
012	253807-5	FLAT WASHER 5	40
013	421198-4	CAP	170
014	317522-6	DRIVING ROLLER	550
015	265092-8	TRUSS HEAD SCREW M5X12	80
016	345196-3	SAFETY COVER	160
017	266026-4	TAPPING SCREW BIND CT 4X12	30
018	345197-1	CAM LEVER	270
019	265028-7	+ PAN HEAD SCREW M4X11	100
020	233333-0	COMPRESSION SPRING 10	100
021	317525-0	ARM HOLDER	1,560
022	265040-7	+ PAN HEAD SCREW M3X4	50
023	153314-7	SHOE 9 COMPLETE	250
024	153310-5	ARM 9 COMPLETE	1,900
025	233332-2	COMPRESSION SPRING 6	80
026	153312-1	ARM TENSIONER COMPLETE	330
027	232185-6	LEAF SPRING	160
028	922111-0	HEX. SOCKET HEAD BOLT M4X10	60
029	911138-5	PAN HEAD SCREW M4X20	50
030	345195-5	ARM COVER	160
031	265040-7	+ PAN HEAD SCREW M3X4	50
032	153314-7	SHOE 9 COMPLETE	250
033	691015-4	POWER SUPPLY CORD 0.75-2-2.5	740
034	682504-0	CORD GUARD 10-85	190
035	687053-2	STRAIN RELIEF	70
036	265995-6	TAPPING SCREW 4X18	40
037	631677-6	CONTROLLER	1,010
039	651263-7	SWITCH SGEL206C	460
040	415635-8	HANDLE COVER	410
041	265995-6	TAPPING SCREW 4X18	40
043	B-80391	CARBON BRUSH SET CB-411A	
044	643550-8	BRUSH HOLDER CAP 5-8	100
046	159747-4	MOTOR HOUSING COMPLETE	1,360
048	266052-3	TAPPING SCREW 4X60	100
049	415634-0	BAFFLE PLATE	150
050	210023-2	BALL BEARING 627DDW	210
051	681614-0	INSULATION WASHER	80
054	210005-4	BALL BEARING 608DDW	240
A01	A-34469	ABRASIVE BELT 9X533-AA80	1,380

SERVICE DRAWING

MODEL NO. 9035

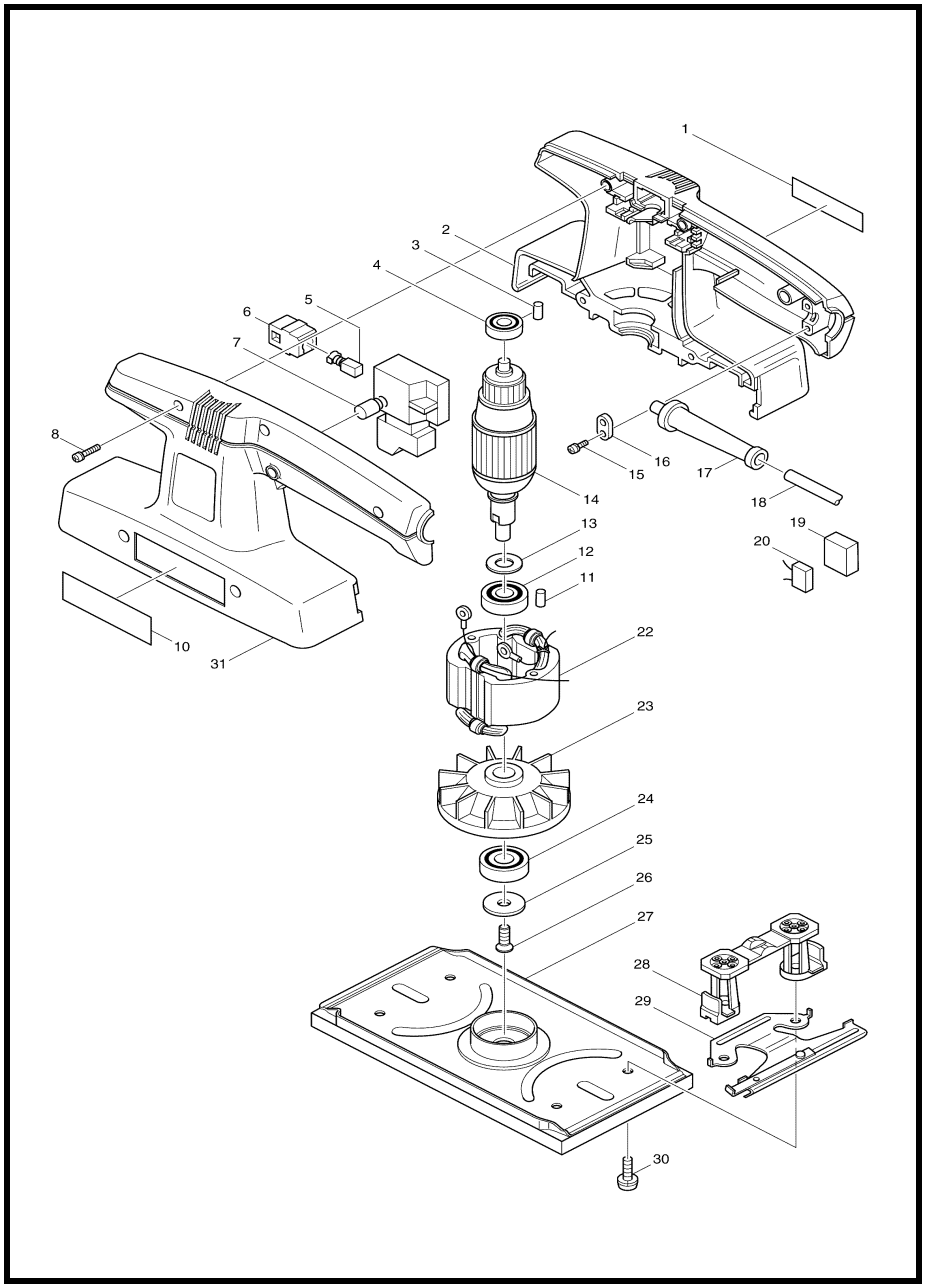

MODEL 9035

ITEM	PARTS ID	DESCRIPTION	PRICE/BAHT
002	181758-1	HOUSING SET	1,780
003	263002-9	RUBBER PIN 4	30
004	210025-8	BALL BEARING 627LLB	250
005	B-80254	CARBON BRUSH SET CB-64A	
006	643552-4	BRUSH HOLDER 5-8	100
007	651242-5	SWITCH SGEL106C-1	420
008	911158-9	PAN HEAD SCREW M4X30	30
011	263002-9	RUBBER PIN 4	30
012	211106-1	BALL BEARING 6201LLB	400
013	961016-9	STOP RING E-10	40
015	911133-5	PAN HEAD SCREW M4X18	50
016	687001-1	STRAIN RELIEF	50
017	682502-4	CORD GUARD 8-85	110
018	691055-2	POWER SUPPLY CORD 0.75-2-2.0	1,100
024	211129-9	BALL BEARING 6201DDW	300
025	253930-6	FLAT WASHER 7	100
026	251372-8	+ COUNTERSUNK HEAD SCREW M5X12	80
027	155174-3	BASE COMPLETE	730
028	410918-1	FOOT	230
029	163107-4	CLAMPER	390
030	911116-5	PAN HEAD SCREW M4X12	20
031	181758-1	HOUSING SET	1,780
400	794028-5	ABRASIVE PAPER SET 93	180

SERVICE DRAWING

MODEL NO. 9035N

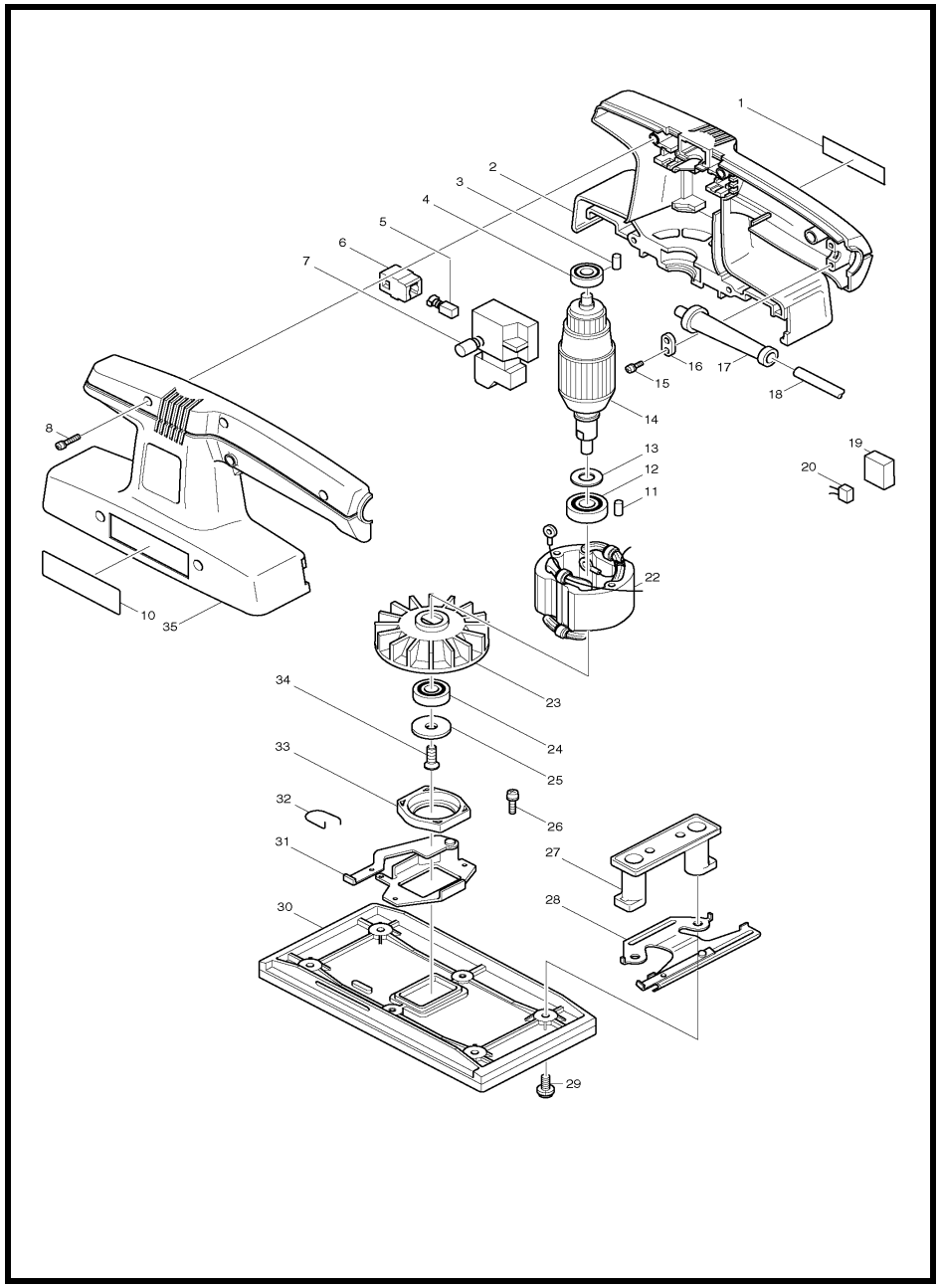

MODEL 9035N

ITEM	PARTS ID	DESCRIPTION	PRICE/BAHT
002	181758-1	HOUSING SET	1,780
003	263002-9	RUBBER PIN 4	30
004	210025-8	BALL BEARING 627LLB	250
005	B-80254	CARBON BRUSH SET CB-64A	
006	643552-4	BRUSH HOLDER 5-8	100
007	651233-6	SWITCH SGEL106C	420
008	911158-9	PAN HEAD SCREW M4X30	30
011	263002-9	RUBBER PIN 4	30
012	211106-1	BALL BEARING 6201LLB	400
013	961016-9	STOP RING E-10	40
015	911133-5	PAN HEAD SCREW M4X18	50
016	687001-1	STRAIN RELIEF	50
017	682502-4	CORD GUARD 8-85	110
018	691055-2	POWER SUPPLY CORD 0.75-2-2.0	1,100
022	593008-6	FIELD ASS'Y 220V	
024	211131-2	BALL BEARING 6001DDW	310
025	267001-3	FLAT WASHER 7	80
026	911106-8	PAN HEAD SCREW M4X8	30
027	421273-6	FOOT	570
028	163107-4	CLAMPER	390
029	265005-9	+PAN HEAD SCREW M4X12	80
030	150344-9	BASE COMPLETE	710
031	163223-2	GUIDE PLATE	690
032	231572-6	TORSION SPRING	100
033	410436-9	BEARING BOX	210
034	251372-8	+ COUNTERSUNK HEAD SCREW M5	80
035	181758-1	HOUSING SET	1,780
400	794028-5	ABRASIVE PAPER SET 93	180

SERVICE DRAWING

MODEL NO. 9045B

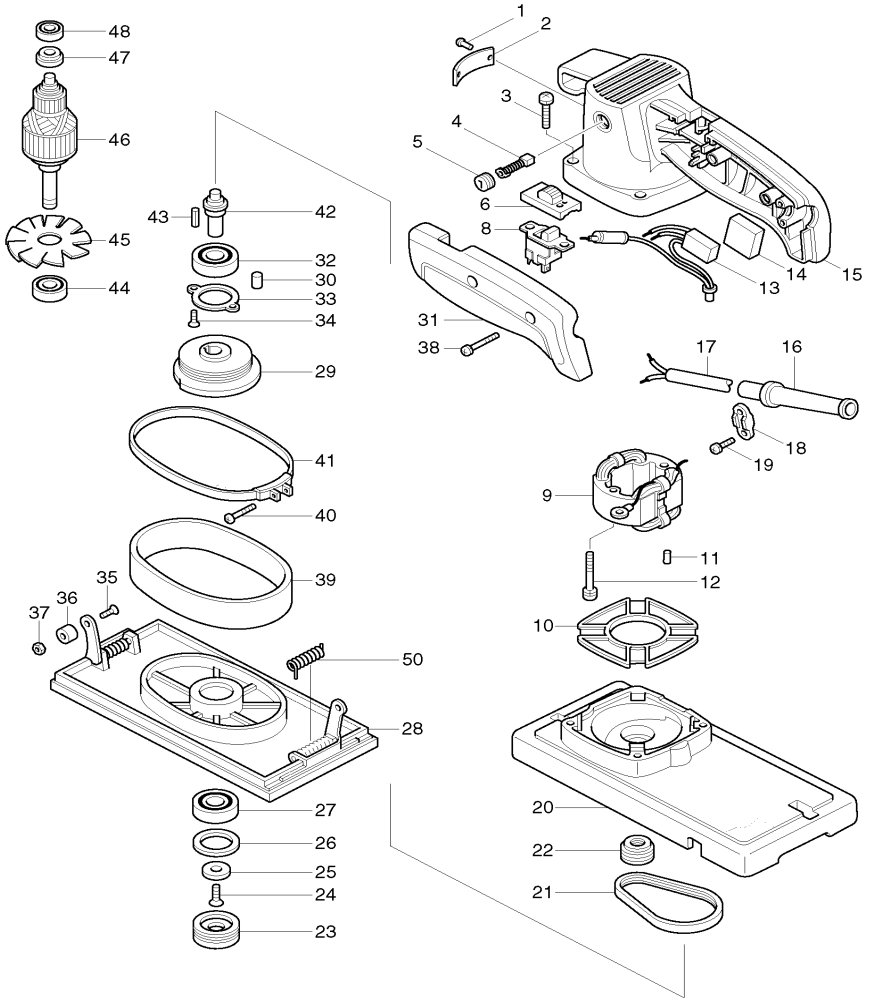

MODEL 9045B

ITEM	PARTS ID	DESCRIPTION	PRICE/BAHT
001	953106-2	RIVET 0-5	20
003	911258-5	PAN HEAD SCREW M5X35	30
004	B-80298	CARBON BRUSH SET CB-100A	
005	643600-9	BRUSH HOLDER CAP 6-10	70
006	652190-1	SLIDE COVER	160
008	651607-1	SWITCH SS106AY	760
010	411628-3	BAFFLE PLATE	170
011	263002-9	RUBBER PIN 4	30
012	911265-8	PAN HEAD SCREW M5X40	80
015	154989-5	MOTOR HOUSING	1,920
016	682504-0	CORD GUARD 10-85	190
017	691015-4	POWER SUPPLY CORD 0.75-2-2.5	740
018	687001-1	STRAIN RELIEF	50
019	911133-5	PAN HEAD SCREW M4X18	50
020	159533-3	FRAME	2,760
021	225049-1	POLY V-BELT 3-250	560
022	222072-7	V-PULLEY 3-26	320
023	285818-2	BEARING RETAINER 12-33	170
024	912212-2	COUNTERSUNK HEAD SCREW M5X´	30
025	253930-6	FLAT WASHER 7	100
026	253792-2	FLAT WASHER 26	80
027	211275-8	BALL BEARING 6003DDW	600
028	134645-3	BASE ASS'Y	3,050
029	315095-3	BALANCE WEIGHT	1,080
030	263005-3	RUBBER PIN 6	30
031	411617-8	HANDLE COVER	320
032	211201-7	BALL BEARING 6002LLB	560
033	285615-6	BEARING RETAINER 40	120
034	912117-6	COUNTERSUNK HEAD SCREW M4X´	20
035	912112-6	COUNTERSUNK HEAD SCREW M4X´	30
036	411625-9	PUSH BUTTON	100
037	931102-0	HEX. NUT M4	50
038	911158-9	PAN HEAD SCREW M4X30	30
039	421155-2	RUBBER SLEEVE	400
040	911146-6	PAN HEAD SCREW M4X25	20
041	164496-0	STEEL BAND	370
042	321114-5	SPINDLE	1,400
043	254204-8	KEY 4	80
044	211066-7	BALL BEARING 6200LLB	410
047	681613-2	INSULATION WASHER	80
048	211033-2	BALL BEARING 608LB	200
050	231534-4	TORSION SPRING 4	120
400	794196-4	ABRASIVE PAPER SET 114X280	330

SERVICE DRAWING

MODEL NO. 9045N

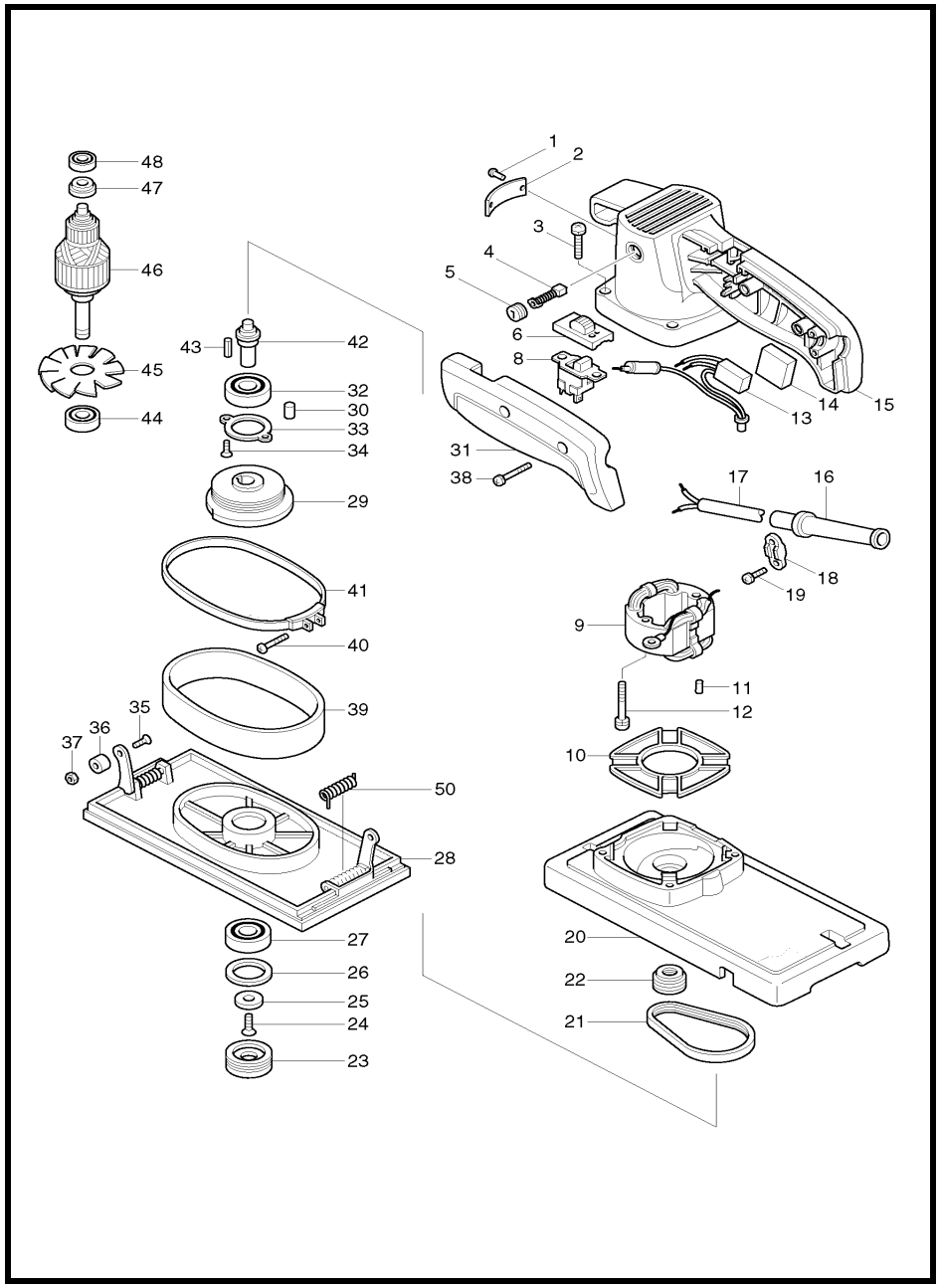

MODEL 9045N

ITEM	PARTS ID	DESCRIPTION	PRICE/BAHT
001	953106-2	RIVET 0-5	20
003	911258-5	PAN HEAD SCREW M5X35	30
004	B-80298	CARBON BRUSH SET CB-100A	
005	643600-9	BRUSH HOLDER CAP 6-10	70
006	652190-1	SLIDE COVER	160
008	651607-1	SWITCH SS106AY	760
010	411628-3	BAFFLE PLATE	170
011	162154-2	SEPARATE	410
012	154989-5	MOTOR HOUSING	1,920
015	911265-8	PAN HEAD SCREW M5X40	80
016	263002-9	RUBBER PIN 4	30
017	911116-5	PAN HEAD SCREW M4X12	20
018	691015-4	POWER SUPPLY CORD 0.75-2-2.5	740
019	682504-0	CORD GUARD 10-85	190
020	687001-1	STRAIN RELIEF	50
021	911133-5	PAN HEAD SCREW M4X18	50
022	911116-5	PAN HEAD SCREW M4X12	20
023	163123-6	STOPPER	150
024	156538-4	FRAME	3,260
025	411624-1	FRAME COVER	830
026	225049-1	POLY V-BELT 3-250	560
027	222072-7	V-PULLEY 3-26	320
028	321114-5	SPINDLE	1,400
029	254204-8	KEY 4	80
030	164496-0	STEEL BAND	370
031	911146-6	PAN HEAD SCREW M4X25	20
032	421155-2	RUBBER SLEEVE	400
033	911158-9	PAN HEAD SCREW M4X30	30
034	411617-8	HANDLE COVER	320
035	263005-3	RUBBER PIN 6	30
036	315095-3	BALANCE WEIGHT	1,080
037	134645-3	BASE ASS'Y	3,050
038	211201-7	BALL BEARING 6002LLB	560
039	285615-6	BEARING RETAINER 40	120
040	912117-6	COUNTERSUNK HEAD SCREW M4X´	20
041	912112-6	COUNTERSUNK HEAD SCREW M4X´	30
042	411625-9	PUSH BUTTON	100
043	931102-0	HEX. NUT M4	50
044	211275-8	BALL BEARING 6003DDW	600
045	253792-2	FLAT WASHER 26	80
046	253930-6	FLAT WASHER 7	100
047	912212-2	COUNTERSUNK HEAD SCREW M5X´	30
048	285818-2	BEARING RETAINER 12-33	170
049	211033-2	BALL BEARING 608LB	200
050	681613-2	INSULATION WASHER	80
053	211066-7	BALL BEARING 6200LLB	410
055	231534-4	TORSION SPRING 4	120
056	256748-4	PIN 4-50	80
058	165007-4	PAPER CLAMP	390
400	794196-4	ABRASIVE PAPER SET 114X280	330
401	122339-2	DUST BAG ASS'Y	970
402	411626-7	FASTENER	150

SERVICE DRAWING

MODEL NO. 9046

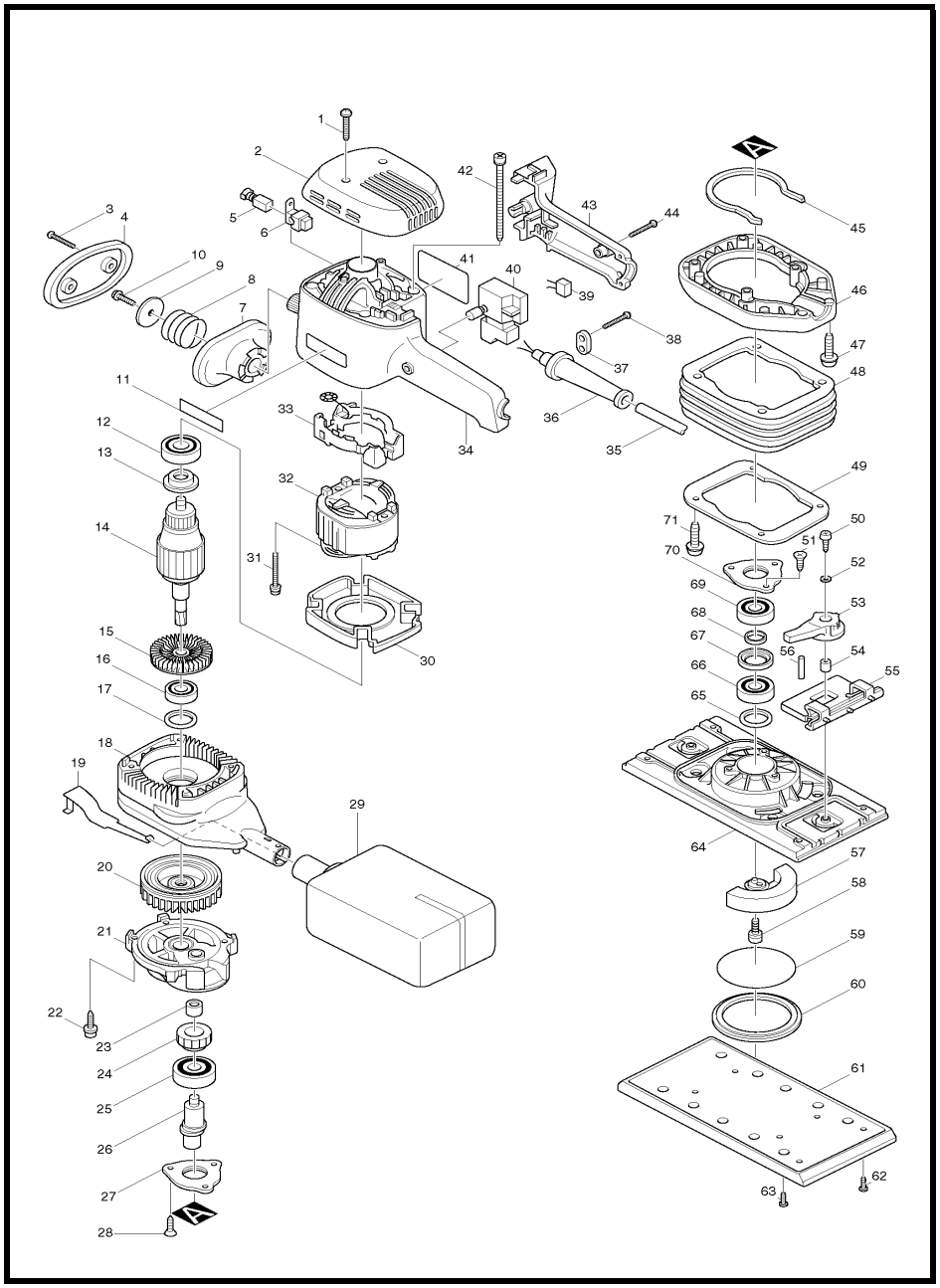

MODEL 9046

ITEM	PARTS ID	DESCRIPTION	PRICE/BAHT
001	265995-6	TAPPING SCREW 4X18	40
002	415709-5	TOP COVER	520
003	265995-6	TAPPING SCREW 4X18	40
004	415723-1	GRIP COVER	230
005	B-80422	CARBON BRUSH SET CB-419A	
006	643923-5	BRUSH HOLDER	130
007	415717-6	GRIP BASE	250
008	231463-1	COMPRESSION SPRING 24	150
009	267136-0	FLAT WASHER 5	110
010	266021-4	TAPPING SCREW 5X20	60
012	211033-2	BALL BEARING 608LB	200
013	681625-5	INSULATION WASHER	50
014	516213-8	ARMATURE ASS'Y 220V	
016	211129-9	BALL BEARING 6201DDW	300
017	267127-1	FLAT WASHER 26	80
018	415567-9	SCROLL HOUSING	710
019	344230-6	EARTH PLATE	250
021	317389-2	GEAR BOX	990
022	266045-0	TAPPING SCREW 4X20	50
023	212004-2	NEEDLE BEARING 810	290
024	226430-9	HELICAL GEAR 39	780
025	211278-2	BALL BEARING 6203DDW	530
026	322708-9	CRANK SHAFT	960
027	162171-2	BEARING RETAINER 24	360
028	266058-1	TAPPING SCREW CT 4X12	20
029	152456-4	DUST BAG COMPLETE	1,270
030	415561-1	BAFFLE PLATE	200
031	266056-5	TAPPING SCREW 5X45	110
032	634223-4	FIELD 220V	
033	632514-7	SUPPORT COMPLETE	340
034	415566-1	MOTOR HOUSING	1,470
035	691015-4	POWER SUPPLY CORD 0.75-2-2.5	740
036	682502-4	CORD GUARD 8-85	110
037	687053-2	STRAIN RELIEF	70
038	265995-6	TAPPING SCREW 4X18	40
040	651263-7	SWITCH SGEL206C	460
042	266057-3	TAPPING SCREW BIND BT 5X90	100
043	415565-3	HANDLE COVER	470
044	265995-6	TAPPING SCREW 4X18	40
045	421496-6	PACKING	80
046	415563-7	SCROLL COVER	640
047	266020-6	TAPPING SCREW 4X12	50
048	165096-9	RUBBER SLEEVE	1,080
049	344143-1	PLATE	250
050	266042-6	TAPPING SCREW BIND CT 4X20	50
051	266058-1	TAPPING SCREW CT 4X12	20
052	253874-0	FLAT WASHER 4	60
053	415559-8	CLAMP LEVER	150
054	257659-6	SLEEVE 4	120
055	152457-2	PAPER CLAMP COMPLETE	640
056	256104-8	PIN 3	30
057	316619-8	BALANCER	490
059	213755-0	O RING 75	120
060	344142-3	UNDER COVER	150
061	162172-0	PAD	1,980
062	266026-4	TAPPING SCREW BIND CT 4X12	30
063	266026-4	TAPPING SCREW BIND CT 4X12	30
064	316620-3	BASE	1,670
065	267127-1	FLAT WASHER 26	80
066	211236-8	BALL BEARING 6002DDW	550
067	257189-7	RING 19	250
068	257188-9	RING 15	160
069	211236-8	BALL BEARING 6002DDW	550
070	162171-2	BEARING RETAINER 24	360
071	266192-7	TAPPING SCREW 4X14	50
072	262547-4	FELT RING 20	80
A01	A-14065	ABRASIVE PAPER 115-60 /STD	510
A02	A-14087	ABRASIVE PAPER 115-100 /STD	500
A03	A-14102	ABRASIVE PAPER 115-150 /STD	460
E06	192523-3	PUNCH PLATE	1,470

SERVICE DRAWING

MODEL NO. 9047

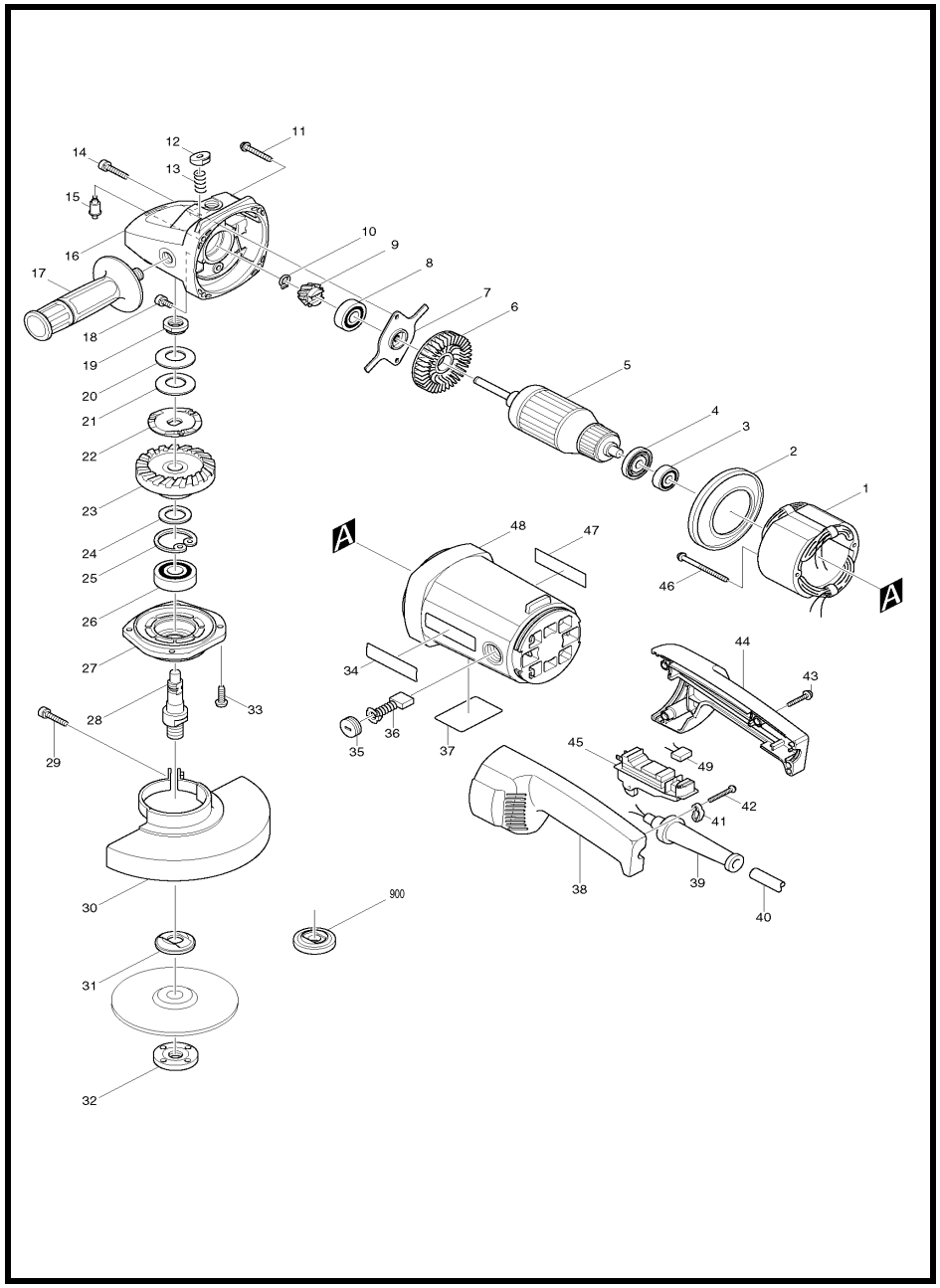

MODEL 9047

ITEM	PARTS ID	DESCRIPTION	PRICE/BAHT
001	526048-9	FIELD ASS'Y 220V	
002	416131-9	BAFFLE PLATE	120
003	211087-9	BALL BEARING 6200DDW	380
004	681630-2	INSULATION WASHER	150
005	516708-1	ARMATURE ASS'Y 220V	
007	285832-8	BEARING RETAINER 60	230
008	211132-0	BALL BEARING 6301DDW	530
009	226737-3	SPIRAL BEVEL GEAR 16	930
010	961005-4	RETAINING RING S-9	30
011	266012-5	TAPPING SCREW 5X35	60
012	416132-7	PIN CAP	110
013	233031-6	COMPRESSION SPRING 12	110
014	266129-4	HEX. SOCKET HEAD BOLT M5X25	80
015	256445-2	PIN 6	230
016	125201-0	GEAR HOUSING ASS'Y	1,960
017	152539-0	GRIP 36 COMPLETE	320
018	265976-0	HEX.SOCKET HEAD BOLT M5X10	80
019	252425-6	NUT M15-23	320
020	232163-6	CUP SPRING 20	180
021	232163-6	CUP SPRING 20	180
022	267725-1	LOCK WASHER	580
023	226738-1	SPIRAL BEVEL GEAR 53	1,930
024	267167-9	FLAT WASHER 15	110
025	962157-4	RETAINING RING R-40	110
026	211278-2	BALL BEARING 6203DDW	530
027	316855-6	BEARING BOX	590
028	322902-3	SPINDLE	1,100
029	265198-2	+PAN HEAD SCREW M8X25	70
030	165215-7	WHEEL COVER	1,030
031	224415-9	INNER FLANGE 42	200
032	224543-0	LOCK NUT 14-45	260
033	911230-7	PAN HEAD SCREW M5X18	90
035	643700-5	BRUSH HOLDER CAP 7-18	110
038	182842-5	HANDLE SET	900
039	682505-8	CORD GUARD 10-90	150
040	691216-4	POWER SUPPLY CORD 1.25-2-2.5	950
041	687053-2	STRAIN RELIEF	70
042	265995-6	TAPPING SCREW 4X18	40
043	265999-8	TAPPING SCREW 4X25	30
044	182842-5	HANDLE SET	900
045	650101-0	SWITCH TG08-1100-011	1,300
046	266029-8	TAPPING SCREW 5X65	130
047	819064-1	MAKITA MARK	70
048	159906-0	MOTOR HOUSING COMPLETE	2,520
050	442129-0	GASKET	100
A01	782407-9	LOCK NUT WRENCH 35	320
B01	125060-2	TORQUE LIMITTER ASS'Y	3,210

SERVICE DRAWING

MODEL NO. 9049

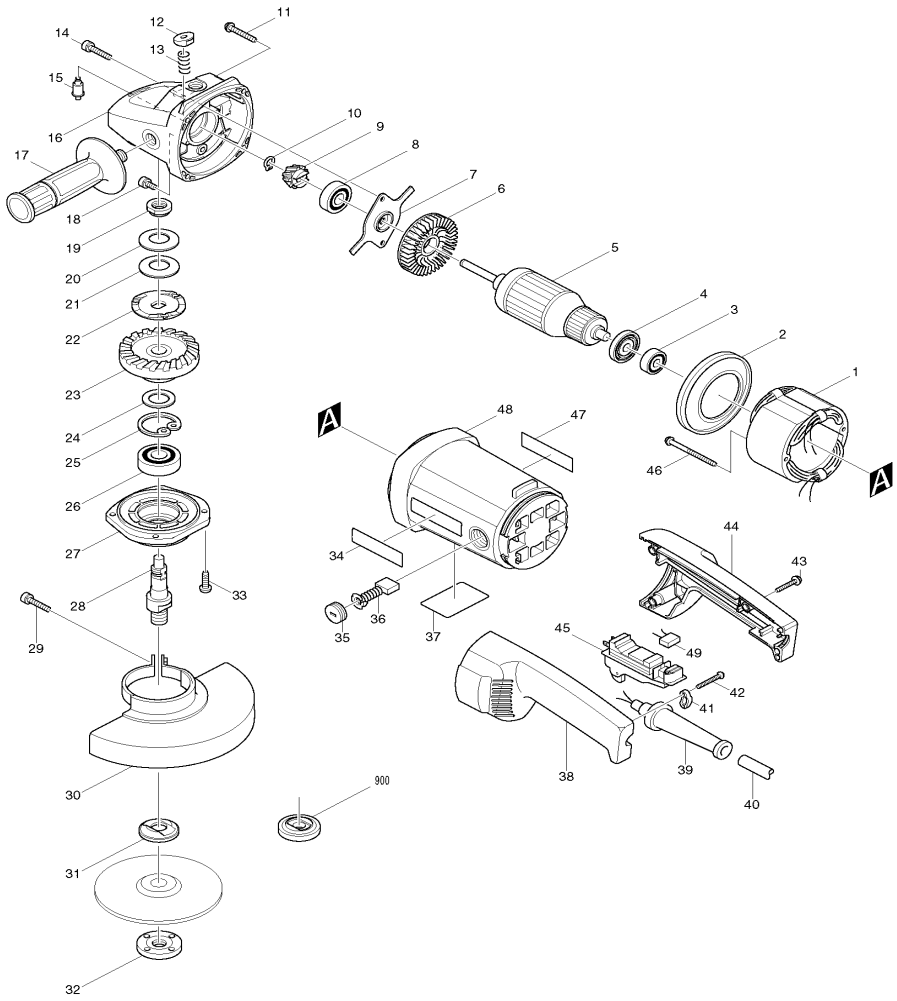

MODEL 9049

ITEM	PARTS ID	DESCRIPTION	PRICE/BAHT
001	526048-9	FIELD ASS'Y 220V	
002	416131-9	BAFFLE PLATE	120
003	211087-9	BALL BEARING 6200DDW	380
004	681630-2	INSULATION WASHER	150
007	285832-8	BEARING RETAINER 60	230
008	211132-0	BALL BEARING 6301DDW	530
009	226740-4	SPIRAL BEVEL GEAR 12	810
010	961005-4	RETAINING RING S-9	30
011	266012-5	TAPPING SCREW 5X35	60
012	416132-7	PIN CAP	110
013	233031-6	COMPRESSION SPRING 12	110
014	266129-4	HEX. SOCKET HEAD BOLT M5X25	80
015	256445-2	PIN 6	230
016	125201-0	GEAR HOUSING ASS'Y	1,960
017	152539-0	GRIP 36 COMPLETE	320
018	265976-0	HEX.SOCKET HEAD BOLT M5X10	80
019	252425-6	NUT M15-23	320
020	232163-6	CUP SPRING 20	180
021	232163-6	CUP SPRING 20	180
022	267725-1	LOCK WASHER	580
023	226739-9	SPIRAL BEVEL GEAR 53	1,900
024	267167-9	FLAT WASHER 15	110
025	962157-4	RETAINING RING R-40	110
026	211278-2	BALL BEARING 6203DDW	530
027	316855-6	BEARING BOX	590
028	322902-3	SPINDLE	1,100
029	265198-2	+PAN HEAD SCREW M8X25	70
030	165216-5	WHEEL COVER	1,070
031	224415-9	INNER FLANGE 42	200
032	224543-0	LOCK NUT 14-45	260
033	911230-7	PAN HEAD SCREW M5X18	90
035	643700-5	BRUSH HOLDER CAP 7-18	110
038	182842-5	HANDLE SET	900
039	682505-8	CORD GUARD 10-90	150
040	691216-4	POWER SUPPLY CORD 1.25-2-2.5	950
041	687053-2	STRAIN RELIEF	70
042	265995-6	TAPPING SCREW 4X18	40
043	265999-8	TAPPING SCREW 4X25	30
044	182842-5	HANDLE SET	900
046	266029-8	TAPPING SCREW 5X65	130
047	819064-1	MAKITA MARK	70
048	159906-0	MOTOR HOUSING COMPLETE	2,520
050	442129-0	GASKET	100
A01	782407-9	LOCK NUT WRENCH 35	320
B01	125061-0	TORQUE LIMITTER ASS'Y	2,840

SERVICE DRAWING

MODEL NO. 906

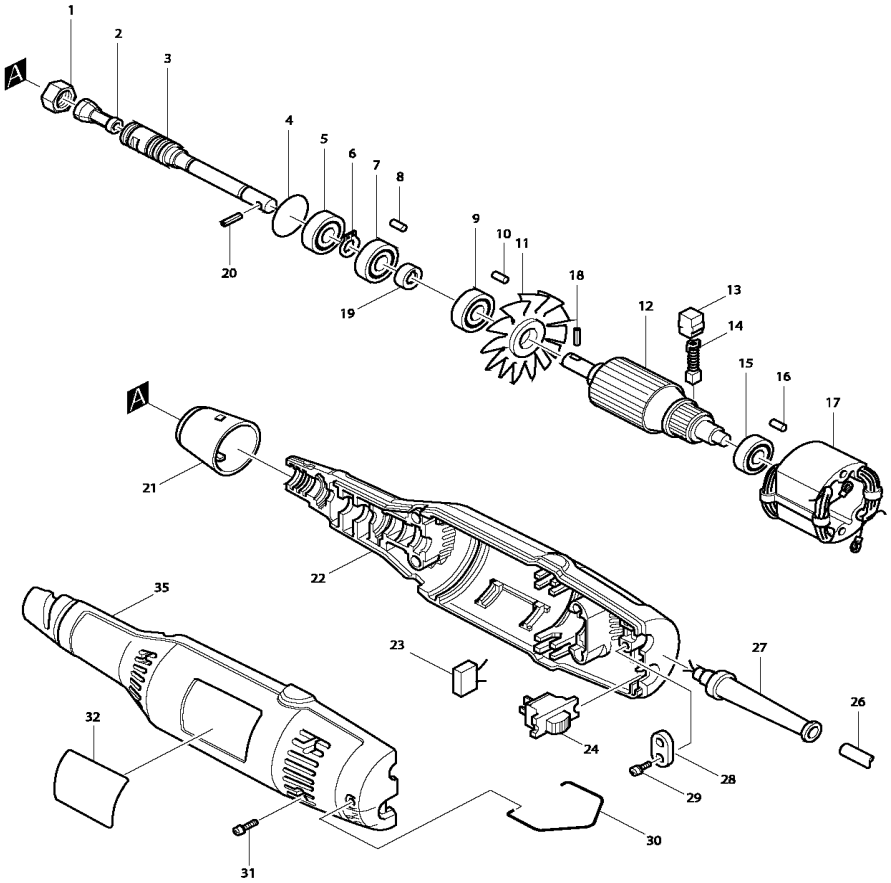

MODEL 906

ITEM	PARTS ID	DESCRIPTION	PRICE/BAHT
001	763606-2	COLLET NUT 6	320
002	763620-8	COLLET CONE 6MM	760
003	321194-1	SPINDLE	1,940
004	213373-4	O RING 22	50
005	211031-6	BALL BEARING 608LLB	190
006	961004-6	RETAINING RING S-8	20
007	211033-2	BALL BEARING 608LB	200
008	263002-9	RUBBER PIN 4	30
009	211031-6	BALL BEARING 608LLB	190
010	263002-9	RUBBER PIN 4	30
012	511403-8	ARMATURE ASS'Y 220V	
013	643552-4	BRUSH HOLDER 5-8	100
014	B-80254	CARBON BRUSH SET CB-64A	
015	211028-5	BALL BEARING 627LB	290
016	263002-9	RUBBER PIN 4	30
017	521388-0	FIELD ASS'Y 220V	
018	951057-3	SPRING PIN 3-12	30
019	410986-4	COUPLING	170
020	951057-3	SPRING PIN 3-12	30
021	341553-3	CAP	360
022	181675-5	HOUSING SET	1,670
024	651600-5	SWITCH SS106A	390
026	691065-9	POWER SUPPLY CORD 0.75-2-2.5	690
027	682500-8	CORD GUARD 8.5-72	120
028	687001-1	STRAIN RELIEF	50
029	911133-5	PAN HEAD SCREW M4X18	50
030	321193-3	HANGER	150
031	911148-2	PAN HEAD SCREW M4X25	70
035	181675-5	HOUSING SET	1,670
400	794217-2	DRESSING STONE	340
401	781003-0	WRENCH 10	190
402	781008-0	WRENCH 17	160
403	741614-3	WHEEL POINT 1-19-60	250
404	741615-1	WHEEL POINT 4-19-60	310

SERVICE DRAWING

MODEL NO. 9067

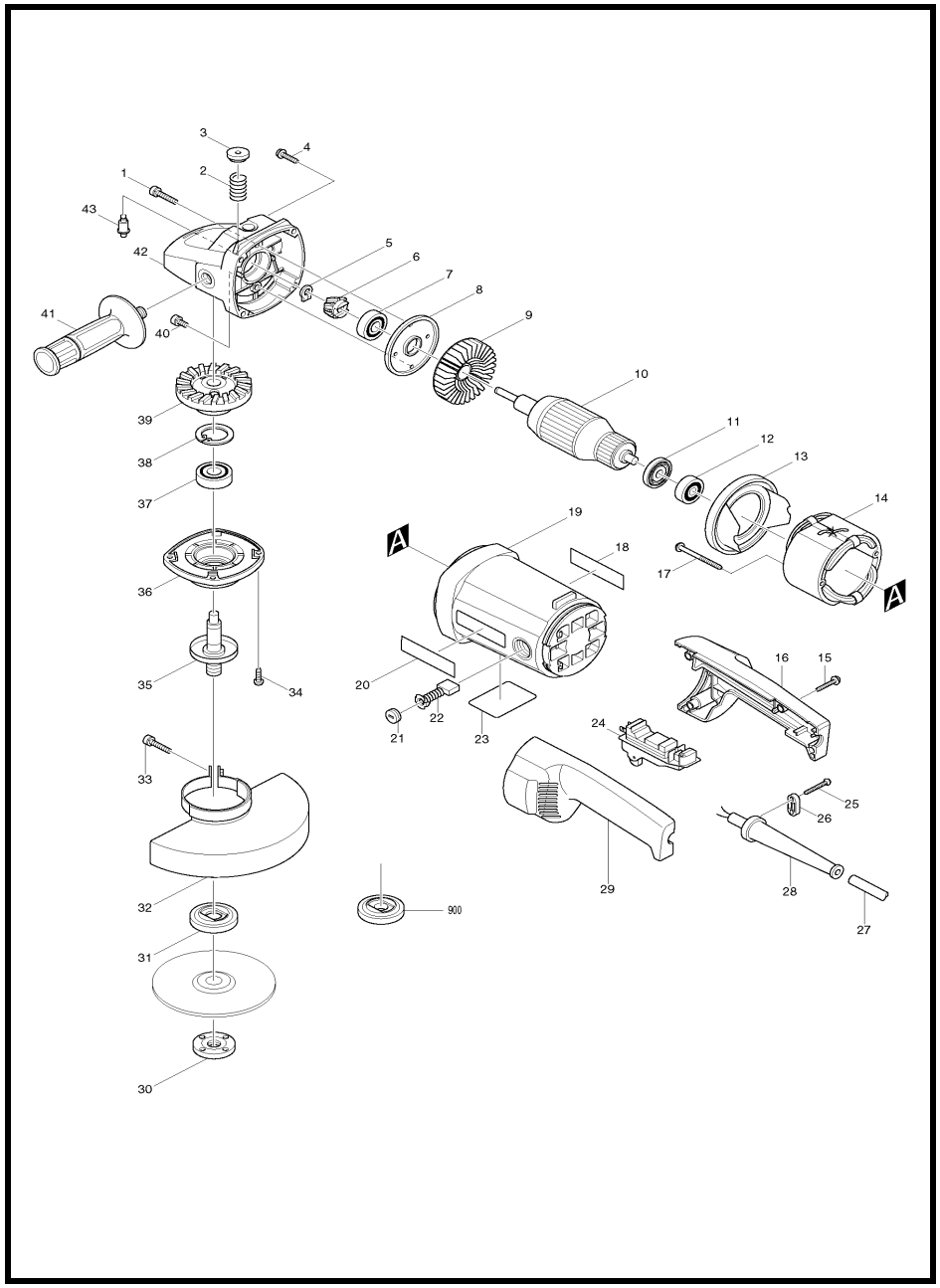

MODEL 9067

ITEM	PARTS ID	DESCRIPTION	PRICE/BAHT
001	265976-0	HEX.SOCKET HEAD BOLT M5X10	80
002	233292-8	COMPRESSION SPRING 12	40
003	416449-8	PIN CAP	100
004	266012-5	TAPPING SCREW 5X35	60
005	961005-4	RETAINING RING S-9	30
006	226774-7	SPIRAL BEVEL GEAR 15	760
007	211132-0	BALL BEARING 6301DDW	530
008	285688-9	BEARING RETAINER 57	220
010	516773-0	ARMATURE ASS'Y 220-240V	
011	681630-2	INSULATION WASHER	150
012	211087-9	BALL BEARING 6200DDW	380
013	416472-3	BAFFLE PLATE	180
014	526073-0	FIELD ASS'Y 220V	
015	265999-8	TAPPING SCREW 4X25	30
016	183029-2	HANDLE SET	820
017	266044-2	TAPPING SCREW 5X60	130
019	150969-9	MOTOR HOUSING COMPLETE	1,710
021	643700-5	BRUSH HOLDER CAP 7-18	110
022	B-80357	CARBON BRUSH SET CB-204A	
025	265995-6	TAPPING SCREW 4X18	40
026	687053-2	STRAIN RELIEF	70
027	691015-4	POWER SUPPLY CORD 0.75-2-2.5	740
028	682505-8	CORD GUARD 10-90	150
029	183029-2	HANDLE SET	820
030	224543-0	LOCK NUT 14-45	260
031	224415-9	INNER FLANGE 42	200
032	165215-7	WHEEL COVER	1,030
033	265198-2	+PAN HEAD SCREW M8X25	70
034	266086-6	HEX. SOCKET HEAD BOLT M5X16	80
035	152606-1	SPINDLE COMPLETE	1,000
036	317007-2	BEARING BOX	760
037	211278-2	BALL BEARING 6203DDW	530
038	962157-4	RETAINING RING R-40	110
039	226773-9	SPIRAL BEVEL GEAR 49	2,110
040	265976-0	HEX.SOCKET HEAD BOLT M5X10	80
041	152539-0	GRIP 36 COMPLETE	320
042	150968-1	GEAR HOUSING COMPLETE	
042	151631-9	GEAR HOUSING COMPLETE	2,410
043	256452-5	PIN 8	170
044	442124-0	GASKET	100
A01	782407-9	LOCK NUT WRENCH 35	320

SERVICE DRAWING

MODEL NO. 9069

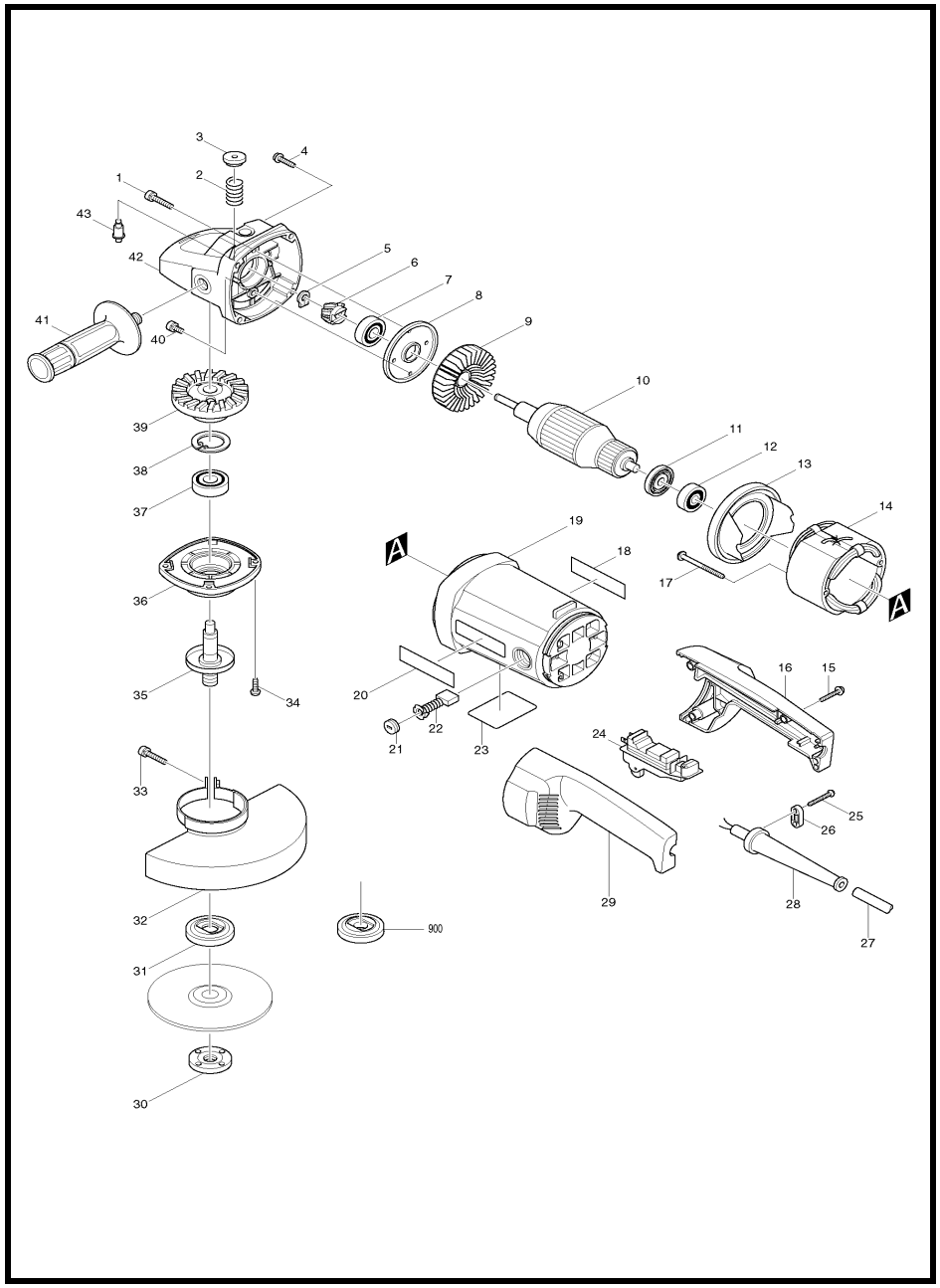

MODEL 9069

ITEM	PARTS ID	DESCRIPTION	PRICE/BAHT
001	265976-0	HEX.SOCKET HEAD BOLT M5X10	80
002	233292-8	COMPRESSION SPRING 12	40
003	416449-8	PIN CAP	100
004	266012-5	TAPPING SCREW 5X35	60
005	961005-4	RETAINING RING S-9	30
006	227500-7	SPIRAL BEVEL GEAR 12	700
007	211132-0	BALL BEARING 6301DDW	530
008	285688-9	BEARING RETAINER 57	220
011	681630-2	INSULATION WASHER	150
012	211087-9	BALL BEARING 6200DDW	380
013	416472-3	BAFFLE PLATE	180
014	526073-0	FIELD ASS'Y 220V	
015	265999-8	TAPPING SCREW 4X25	30
016	183029-2	HANDLE SET	820
017	266044-2	TAPPING SCREW 5X60	130
019	150969-9	MOTOR HOUSING COMPLETE	1,710
021	643700-5	BRUSH HOLDER CAP 7-18	110
022	B-80357	CARBON BRUSH SET CB-204A	
024	650101-0	SWITCH TG08-1100-011	1,300
025	265995-6	TAPPING SCREW 4X18	40
026	687053-2	STRAIN RELIEF	70
027	691015-4	POWER SUPPLY CORD 0.75-2-2.5	740
028	682505-8	CORD GUARD 10-90	150
029	183029-2	HANDLE SET	820
030	224543-0	LOCK NUT 14-45	260
031	224415-9	INNER FLANGE 42	200
032	165216-5	WHEEL COVER	1,070
033	265198-2	+PAN HEAD SCREW M8X25	70
034	266086-6	HEX. SOCKET HEAD BOLT M5X16	80
035	152606-1	SPINDLE COMPLETE	1,000
036	317007-2	BEARING BOX	760
037	211278-2	BALL BEARING 6203DDW	530
038	962157-4	RETAINING RING R-40	110
039	227499-6	SPIRAL BEVEL GEAR 50	1,700
040	265976-0	HEX.SOCKET HEAD BOLT M5X10	80
041	152539-0	GRIP 36 COMPLETE	320
042	151631-9	GEAR HOUSING COMPLETE	2,410
043	256452-5	PIN 8	170
044	442124-0	GASKET	100
A01	782407-9	LOCK NUT WRENCH 35	320

SERVICE DRAWING

MODEL NO. 906H

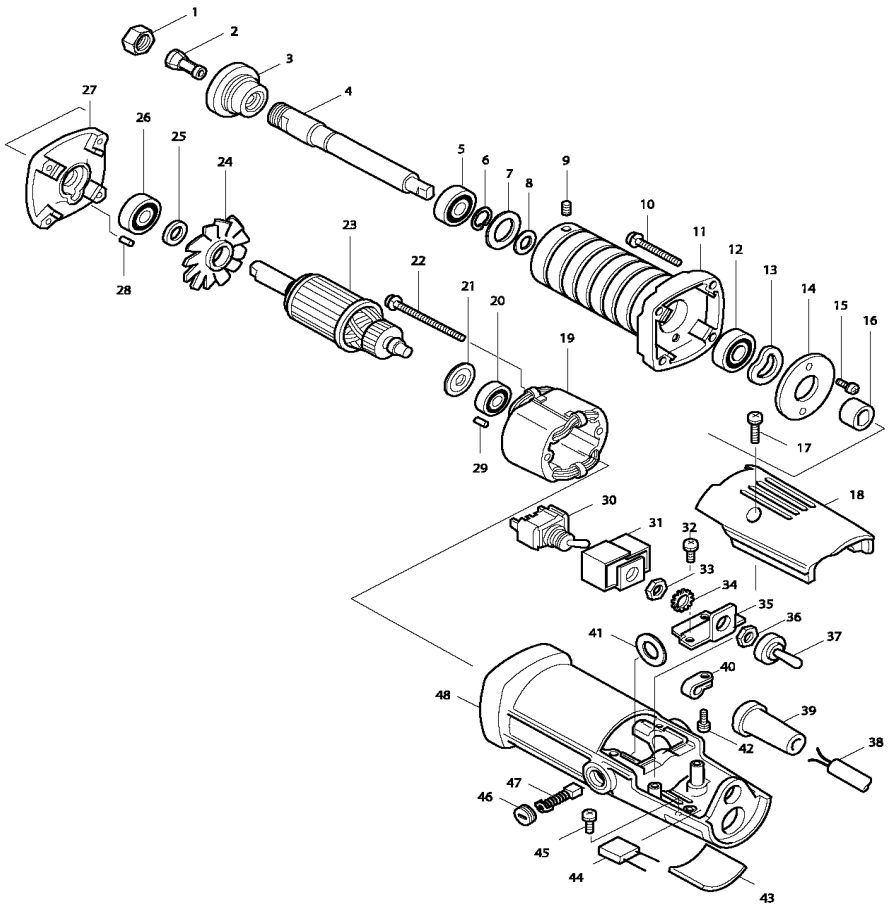

MODEL 906H

ITEM	PARTS ID	DESCRIPTION	PRICE/BAHT
001	763606-2	COLLET NUT 6	320
002	763620-8	COLLET CONE 6MM	760
003	321896-9	FRONT CAP	1,160
004	321894-3	SPINDLE	1,690
005	211103-7	BALL BEARING 6001LB	410
006	961052-5	RETAINING RING S-12	40
007	267018-6	FLAT WASHER 22	80
008	253758-2	FLAT WASHER 10	40
009	913101-4	SET SCREW M4X6	50
010	911161-0	PAN HEAD SCREW M4X35	30
011	315874-9	BARREL	2,770
012	211063-3	BALL BEARING 6000LB	390
013	267715-4	WAVE WASHER 20	50
014	342950-6	PLATE	120
015	911111-5	PAN HEAD SCREW M4X10	30
016	321895-1	COUPLING	390
017	911136-9	PAN HEAD SCREW M4X20	50
018	315872-3	REAR COVER	830
019	521553-1	FIELD ASS'Y 220V	
020	211028-5	BALL BEARING 627LB	290
021	213001-1	DUST SEAL 7	120
022	911190-3	PAN HEAD SCREW M4X60	80
025	253758-2	FLAT WASHER 10	40
026	211063-3	BALL BEARING 6000LB	390
027	152289-7	INNER COVER	990
028	263002-9	RUBBER PIN 4	30
029	263002-9	RUBBER PIN 4	30
030	651409-5	SWITCH ST115A-35	800
031	652173-1	INSULATION PAPER	100
032	911111-5	PAN HEAD SCREW M4X10	30
033	652101-6	HEX. NUT M12	50
034	652061-2	WASHER 12	30
035	342951-4	SWITCH HOLDER	190
036	652101-6	HEX. NUT M12	50
037	421305-9	DUST COVER	80
038	691134-6	POWER SUPPLY CORD 0.75-3-2.5	1,010
039	682505-8	CORD GUARD 10-90	150
040	687650-4	STRAIN RELIEF	320
041	681000-5	INSULATION WASHER	30
042	911111-5	PAN HEAD SCREW M4X10	30
045	652014-1	PAN HEAD SCREW M4X8	30
046	643550-8	BRUSH HOLDER CAP 5-8	100
048	157596-3	MOTOR HOUSING	3,570
400	794217-2	DRESSING STONE	340
401	781003-0	WRENCH 10	190
402	781008-0	WRENCH 17	160
403	741614-3	WHEEL POINT 1-19-60	250
404	741615-1	WHEEL POINT 4-19-60	310

SERVICE DRAWING

MODEL NO. 9077

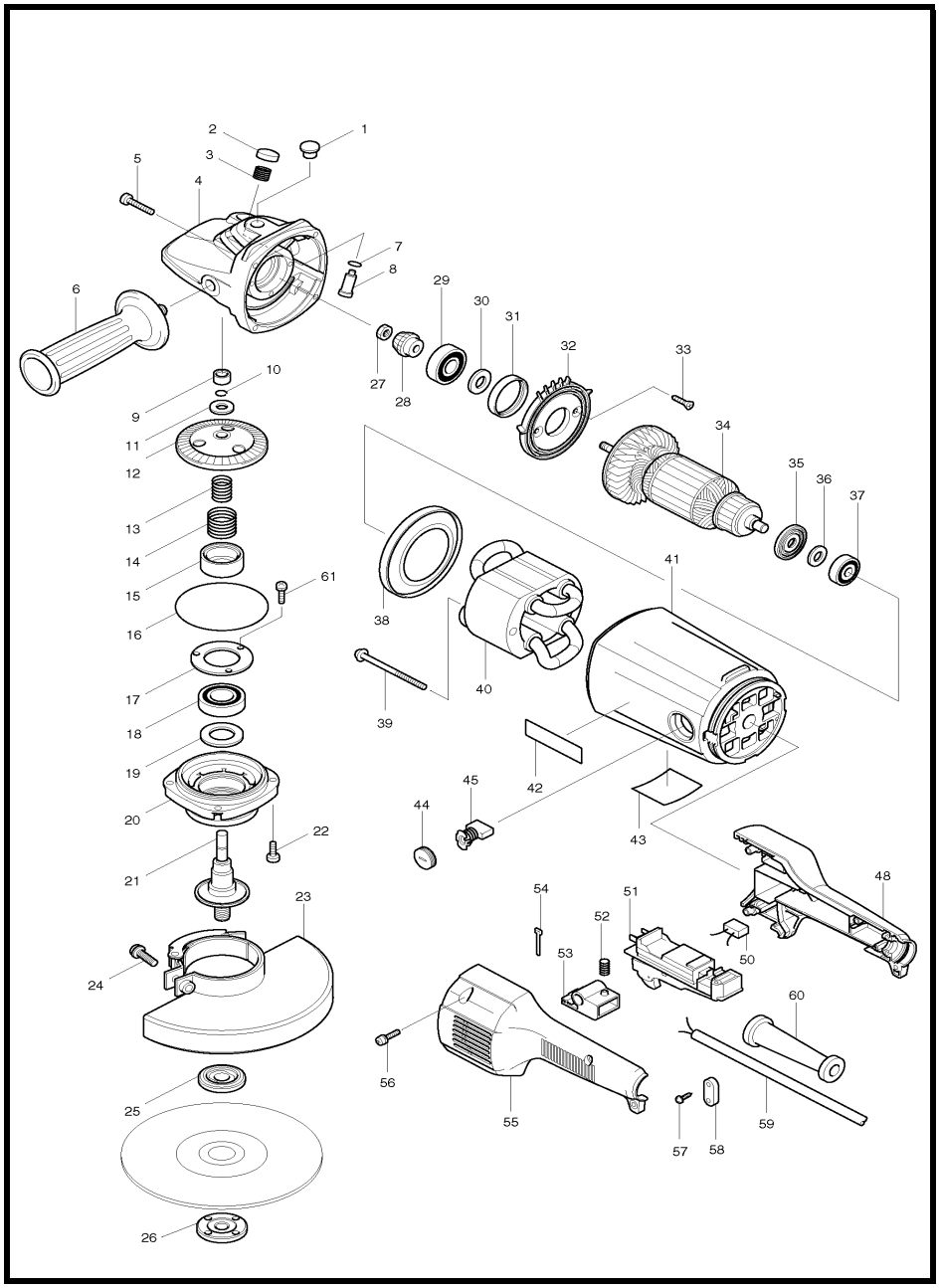

MODEL 9077

ITEM	PARTS ID	DESCRIPTION	PRICE/BAHT
001	416972-3	CAP	80
002	416971-5	PIN CAP	150
003	233031-6	COMPRESSION SPRING 12	110
004	151772-1	GEAR HOUSING COMPLETE	3,470
005	922261-1	HEX. SOCKET HEAD BOLT M5X40	80
006	151776-3	GRIP 38 COMPLETE	810
007	213011-8	O RING 7	20
008	256455-9	PIN 11	160
009	331566-2	SLEEVE 10	270
010	231995-8	RING SPRING 9	100
011	253878-2	FLAT WASHER 10	60
012	226788-6	SPIRAL BEVEL GEAR 53	2,370
013	231994-0	LOCK SPRING 17	490
014	231993-2	LOCK SPRING 25	530
015	323944-0	LOCK SLEEVE	810
016	213757-6	O RING 80	120
017	285836-0	BEARING RETAINER 50	170
018	211326-7	BALL BEARING 6004DDW	630
019	267041-1	FLAT WASHER 20	80
020	151774-7	BEARING BOX COMPLETE	1,440
021	151777-1	SPINDLE COMPLETE	1,790
022	922221-3	HEX. SOCKET HEAD BOLT M5X16	60
023	163413-7	WHEEL COVER	2,290
024	265198-2	+PAN HEAD SCREW M8X25	70
025	224415-9	INNER FLANGE 42	200
026	224543-0	LOCK NUT 14-45	260
027	931403-6	HEX. NUT M8	50
028	226787-8	SPIRAL BEVEL GEAR 14	760
029	211132-0	BALL BEARING 6301DDW	530
030	267113-2	FLAT WASHER 12	30
031	262085-6	RUBBER RING 38	100
032	285835-2	BEARING RETAINER 47	590
033	912222-9	COUNTERSUNK HEAD SCREW M5X1	50
034	516798-4	ARMATURE ASS'Y 220-240V	
035	681630-2	INSULATION WASHER	150
036	253001-9	FLAT WASHER 10	50
037	211087-9	BALL BEARING 6200DDW	380
038	416131-9	BAFFLE PLATE	120
039	266029-8	TAPPING SCREW 5X65	130
041	151773-9	MOTOR HOUSING COMPLETE	2,290
044	643700-5	BRUSH HOLDER CAP 7-18	110
045	B-80357	CARBON BRUSH SET CB-204A	
048	183117-5	HANDLE SET	1,500
051	651176-2	SWITCH 1267.4109	1,180
052	231402-1	COMPRESSION SPRING 7	80
053	416998-5	LOCK BUTTON	230
054	687010-0	BAND	30
055	183117-5	HANDLE SET	1,500
056	911148-2	PAN HEAD SCREW M4X25	70
057	265995-6	TAPPING SCREW 4X18	40
058	687053-2	STRAIN RELIEF	70
059	691015-4	POWER SUPPLY CORD 0.75-2-2.5	740
061	911221-8	PAN HEAD SCREW M5X16	30
A01	782407-9	LOCK NUT WRENCH 35	320

SERVICE DRAWING

MODEL NO. 9105

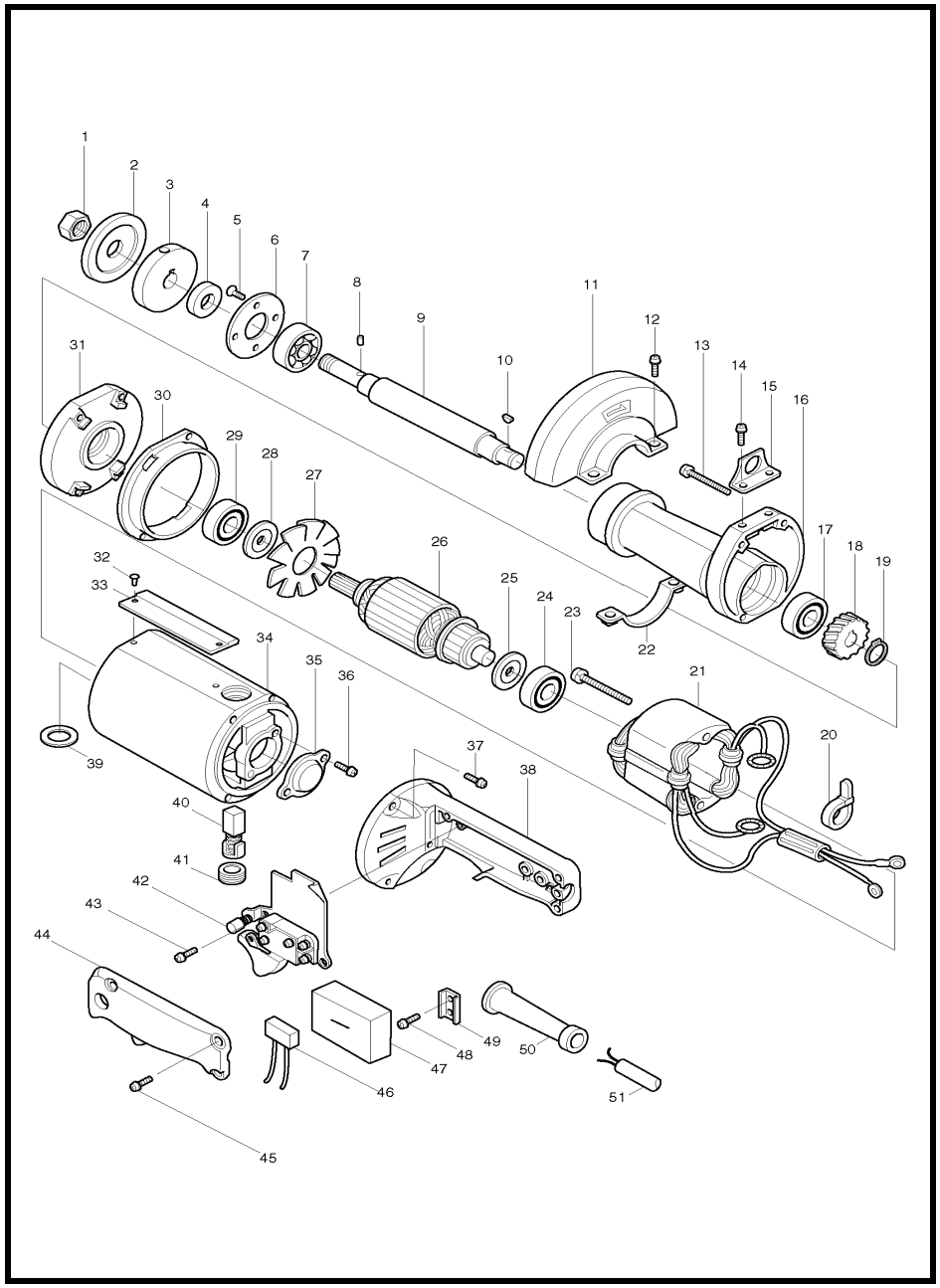

MODEL 9105

ITEM	PARTS ID	DESCRIPTION	PRICE/BAHT
001	252007-4	HEX. NUT W1/2-21	150
002	224019-7	OUTER FLANGE 50	520
003	224047-2	INNER FLANGE 50	720
004	257025-7	RING 17	190
005	912116-8	COUNTERSUNK HEAD SCREW M4X´	20
006	285621-1	BEARING RETAINER 47	190
007	211258-8	BALL BEARING 6203LB	530
008	256009-2	PIN 4.5	80
009	325119-7	SPINDLE	1,930
010	254002-0	WOODRUFF KEY 3	80
011	155162-0	WHEEL COVER COMPLETE	900
012	911216-1	PAN HEAD SCREW M5X14	30
013	911261-6	PAN HEAD SCREW M5X40	50
014	911216-1	PAN HEAD SCREW M5X14	30
015	342004-9	HANGER	170
016	316099-8	GEAR HOUSING	4,180
017	211258-8	BALL BEARING 6203LB	530
018	221126-7	HELICAL GEAR 47	1,020
019	961052-5	RETAINING RING S-12	40
020	687010-0	BAND	30
021	523005-8	FIELD ASS'Y 220V	
022	342472-6	WHEEL COVER HOLDER	210
023	911290-9	PAN HEAD SCREW M5X65	100
024	211066-7	BALL BEARING 6200LLB	410
025	213051-6	DUST SEAL 10	120
028	213102-5	DUST SEAL 12	130
029	211108-7	BALL BEARING 6201LB	390
030	343086-4	BAFFLE PLATE	290
031	316097-2	GEAR HOUSING COVER	1,950
032	953106-2	RIVET 0-5	20
034	183172-7	MOTOR HOUSING SET	4,270
035	285006-1	BEARING COVER 42	120
036	911206-4	PAN HEAD SCREW M5X10	20
037	911231-5	PAN HEAD SCREW M5X20	50
038	317301-2	HANDLE	2,350
039	681002-1	INSULATION WASHER	30
040	B-80329	CARBON BRUSH SET CB-153A	
041	643650-4	BRUSH HOLDER CAP 6.5-13.5	70
043	911106-8	PAN HEAD SCREW M4X8	30
044	317302-0	HANDLE COVER	660
045	911121-2	PAN HEAD SCREW M4X14	20
048	911116-5	PAN HEAD SCREW M4X12	20
049	687600-9	STRAIN RELIEF	50
050	682505-8	CORD GUARD 10-90	150
051	691134-6	POWER SUPPLY CORD 0.75-3-2.5	1,010
400	794031-6	DEPRESSED CENTER WHEEL SET 1	1,970
401	781029-2	WRENCH 21	230
402	262517-3	SLEEVE 17	80

SERVICE DRAWING

MODEL NO. 9207SPB

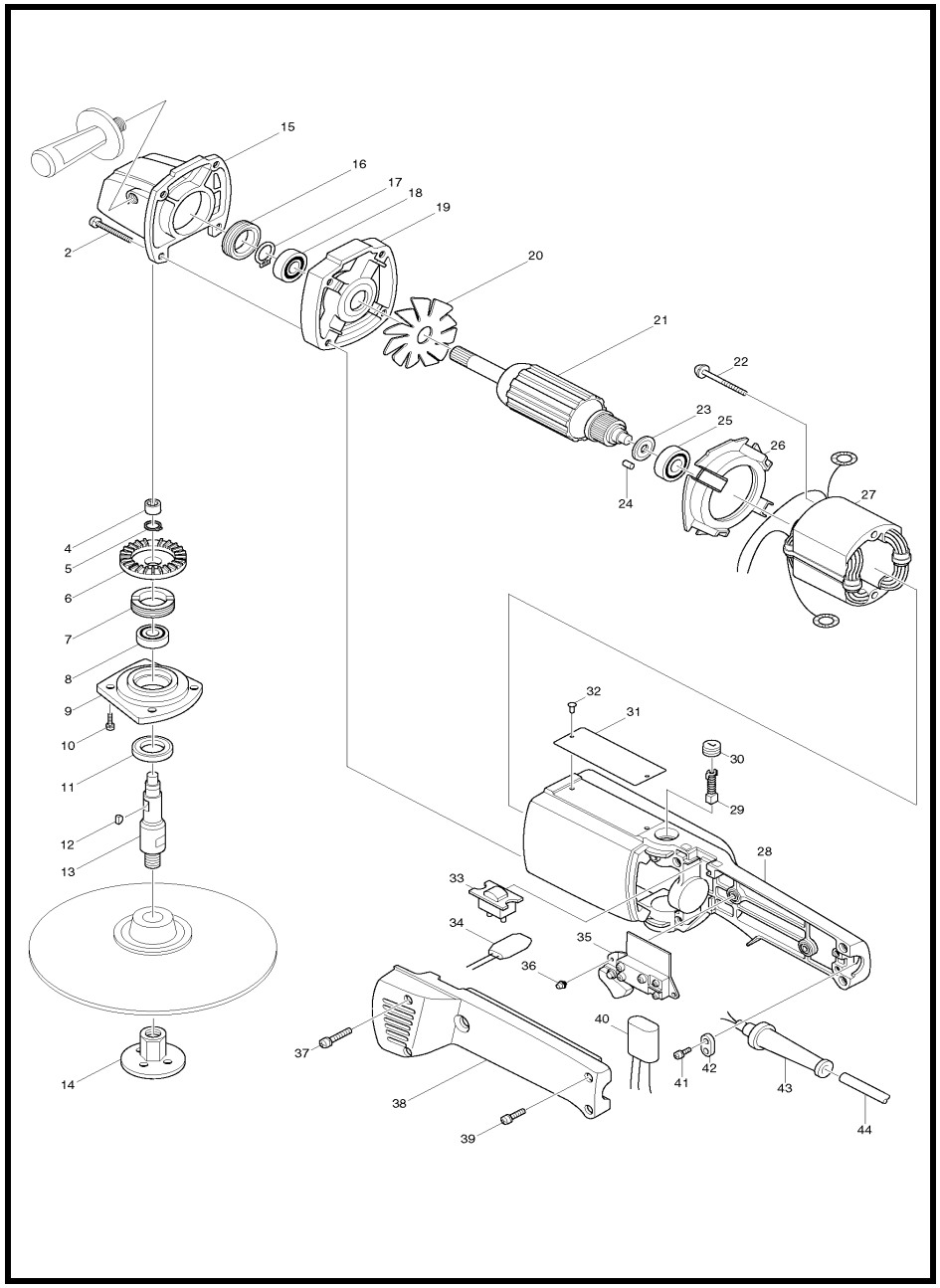

MODEL 9207SPB

ITEM	PARTS ID	DESCRIPTION	PRICE/BAHT
002	911261-6	PAN HEAD SCREW M5X40	50
004	212005-0	NEEDLE BEARING 810	240
005	961052-5	RETAINING RING S-12	40
006	221312-0	SPIRAL BEVEL GEAR 43	1,900
007	285805-1	BEARING RETAINER 22-34	160
008	211106-1	BALL BEARING 6201LLB	400
009	312795-6	BEARING BOX	700
010	911121-2	PAN HEAD SCREW M4X14	20
011	213301-9	DUST SEAL 20	150
012	254002-0	WOODRUFF KEY 3	80
013	325527-2	SPINDLE	1,340
014	224523-6	SANDING LOCK NUT 16-48	410
015	133324-0	GEAR HOUSING ASS'Y	1,870
016	285816-6	BEARING RETAINER 19-33	170
017	961055-9	RETAINING RING S-15	50
018	211201-7	BALL BEARING 6002LLB	560
019	312722-3	GEAR HOUSING COVER	1,080
022	911295-9	PAN HEAD SCREW M5X70	100
023	681613-2	INSULATION WASHER	80
024	263014-2	RUBBER PIN 4	40
025	211033-2	BALL BEARING 608LB	200
026	411263-7	BAFFLE PLATE	200
028	156125-9	MOTOR HOUSING	2,170
029	B-80298	CARBON BRUSH SET CB-100A	
030	643600-9	BRUSH HOLDER CAP 6-10	70
032	953106-2	RIVET 0-5	20
033	651600-5	SWITCH SS106A	390
034	631011-0	DIODE S3V60ZM-H	1,130
035	651018-0	SWITCH HPAHR2-3S	970
036	911103-4	PAN HEAD SCREW M4X6	30
037	911168-6	PAN HEAD SCREW M4X40	40
038	411262-9	HANDLE COVER	550
039	911148-2	PAN HEAD SCREW M4X25	70
041	911133-5	PAN HEAD SCREW M4X18	50
042	687001-1	STRAIN RELIEF	50
043	682504-0	CORD GUARD 10-85	190
044	691015-4	POWER SUPPLY CORD 0.75-2-2.5	740
400	743012-7	RUBBER PAD 170	1,160
401	794094-2	ABRASIVE DISC 180 #50	1,970
404	782412-6	LOCK NUT WRENCH 28	230
405	781008-0	WRENCH 17	160

SERVICE DRAWING

MODEL NO. 9218PB

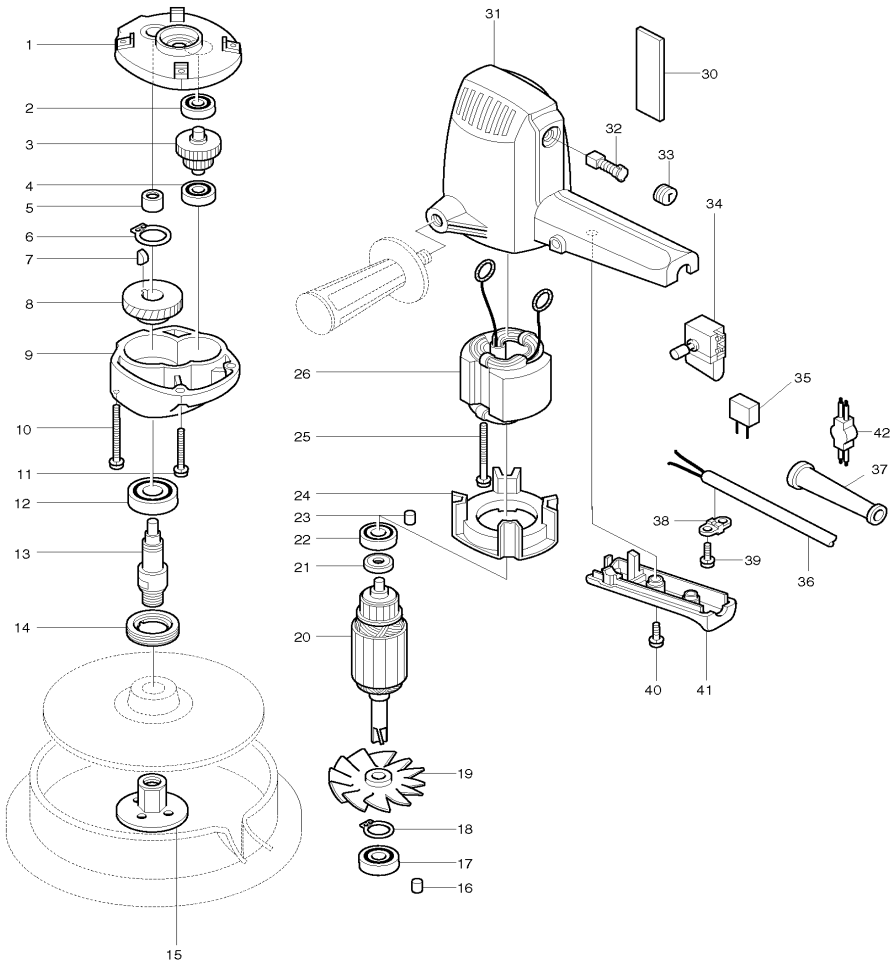

MODEL 9218PB

ITEM	PARTS ID	DESCRIPTION	PRICE/BAHT
001	156994-8	GEAR HOUSING COVER	1,210
002	211033-2	BALL BEARING 608LB	200
003	226031-3	GEAR COMPLETE 19-45	1,810
004	211033-2	BALL BEARING 608LB	200
005	212052-1	NEEDLE BEARING 1010	360
006	961055-9	RETAINING RING S-15	50
007	254001-2	WOODRUFF KEY 4	80
008	221267-9	HELICAL GEAR 44	1,200
009	312671-4	GEAR HOUSING	1,920
010	911186-4	PAN HEAD SCREW M4X60	50
011	911166-0	PAN HEAD SCREW M4X40	40
012	211206-7	BALL BEARING 6202LLB	460
013	325528-0	SPINDLE	1,340
014	285809-3	BEARING RETAINER 23-36	160
015	224523-6	SANDING LOCK NUT 16-48	410
016	263002-9	RUBBER PIN 4	30
017	211131-2	BALL BEARING 6001DDW	310
018	961052-5	RETAINING RING S-12	40
020	512415-4	ARMATURE ASS'Y 220V	
021	213002-9	DUST SEAL 8	120
022	211033-2	BALL BEARING 608LB	200
023	263002-9	RUBBER PIN 4	30
024	411241-7	BAFFLE PLATE	210
025	911681-4	PAN HEAD SCREW M5X60	100
031	159596-9	MOTOR HOUSING	2,230
032	B-80298	CARBON BRUSH SET CB-100A	
033	643600-9	BRUSH HOLDER CAP 6-10	70
034	651204-3	SWITCH SGEL115CDY	420
036	691015-4	POWER SUPPLY CORD 0.75-2-2.5	740
037	682504-0	CORD GUARD 10-85	190
038	687001-1	STRAIN RELIEF	50
039	911133-5	PAN HEAD SCREW M4X18	50
040	911138-5	PAN HEAD SCREW M4X20	50
041	414994-7	HANDLE COVER	340
400	743008-8	RUBBER PAD 170	1,160
401	794094-2	ABRASIVE DISC 180 #50	1,970
402	152492-0	GRIP 36 COMPLETE	230
403	781008-0	WRENCH 17	160
404	782412-6	LOCK NUT WRENCH 28	230

SERVICE DRAWING

MODEL NO. 9218PBL

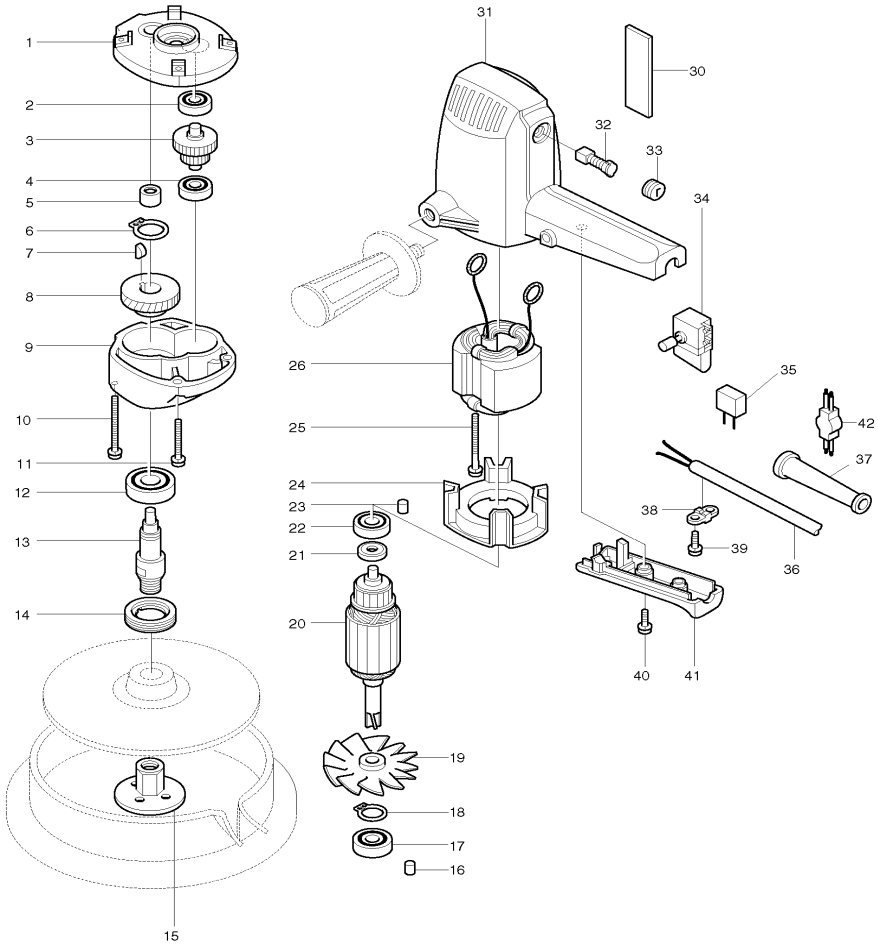

MODEL 9218PBL

ITEM	PARTS ID	DESCRIPTION	PRICE/BAHT
001	156994-8	GEAR HOUSING COVER	1,210
002	211033-2	BALL BEARING 608LB	200
003	226112-3	GEAR COMPLETE 18-51	1,910
004	211033-2	BALL BEARING 608LB	200
005	212052-1	NEEDLE BEARING 1010	360
006	961055-9	RETAINING RING S-15	50
007	254001-2	WOODRUFF KEY 4	80
008	226401-6	HELICAL GEAR 46	1,290
009	312671-4	GEAR HOUSING	1,920
010	911186-4	PAN HEAD SCREW M4X60	50
011	911166-0	PAN HEAD SCREW M4X40	40
012	211206-7	BALL BEARING 6202LLB	460
013	325528-0	SPINDLE	1,340
014	285809-3	BEARING RETAINER 23-36	160
015	224523-6	SANDING LOCK NUT 16-48	410
016	263002-9	RUBBER PIN 4	30
017	211131-2	BALL BEARING 6001DDW	310
018	961052-5	RETAINING RING S-12	40
020	516108-5	ARMATURE ASS'Y 220V	
021	213002-9	DUST SEAL 8	120
022	211033-2	BALL BEARING 608LB	200
023	263002-9	RUBBER PIN 4	30
024	411241-7	BAFFLE PLATE	210
025	911681-4	PAN HEAD SCREW M5X60	100
031	159596-9	MOTOR HOUSING	2,230
032	B-80298	CARBON BRUSH SET CB-100A	
033	643600-9	BRUSH HOLDER CAP 6-10	70
036	691015-4	POWER SUPPLY CORD 0.75-2-2.5	740
037	682504-0	CORD GUARD 10-85	190
038	687001-1	STRAIN RELIEF	50
039	911133-5	PAN HEAD SCREW M4X18	50
040	911138-5	PAN HEAD SCREW M4X20	50
041	414994-7	HANDLE COVER	340
A02	794094-2	ABRASIVE DISC 180 #50	1,970
A03	152492-0	GRIP 36 COMPLETE	230
A04	781008-0	WRENCH 17	160
A05	782412-6	LOCK NUT WRENCH 28	230

SERVICE DRAWING

MODEL NO. 9218SB

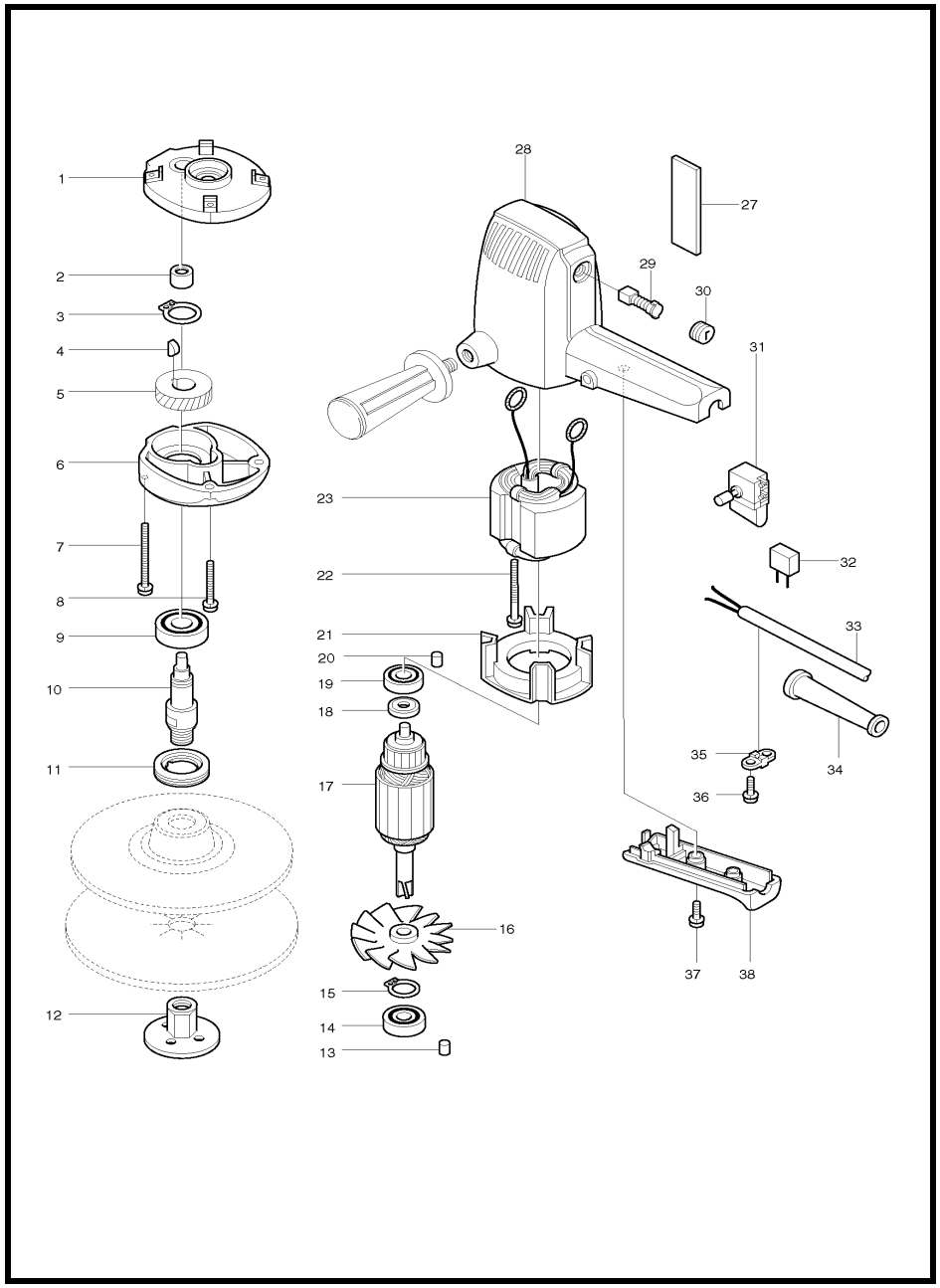

MODEL 9218SB

ITEM	PARTS ID	DESCRIPTION	PRICE/BAHT
001	156993-0	GEAR HOUSING COVER COMPLETE	820
002	212004-2	NEEDLE BEARING 810	290
003	961055-9	RETAINING RING S-15	50
004	254001-2	WOODRUFF KEY 4	80
005	221273-4	HELICAL GEAR 52	810
006	312368-5	GEAR HOUSING	1,250
007	911171-7	PAN HEAD SCREW M4X45	40
008	911161-0	PAN HEAD SCREW M4X35	30
009	211206-7	BALL BEARING 6202LLB	460
010	325526-4	SPINDLE	1,240
011	285809-3	BEARING RETAINER 23-36	160
012	224523-6	SANDING LOCK NUT 16-48	410
013	263002-9	RUBBER PIN 4	30
014	211101-1	BALL BEARING 6001LLB	450
015	961052-5	RETAINING RING S-12	40
017	512405-7	ARMATURE ASS'Y 220V	
018	213002-9	DUST SEAL 8	120
019	211033-2	BALL BEARING 608LB	200
020	263002-9	RUBBER PIN 4	30
021	411241-7	BAFFLE PLATE	210
022	911681-4	PAN HEAD SCREW M5X60	100
023	522225-1	FIELD ASS'Y 220V	
028	159596-9	MOTOR HOUSING	2,230
029	B-80298	CARBON BRUSH SET CB-100A	
030	643600-9	BRUSH HOLDER CAP 6-10	70
033	691015-4	POWER SUPPLY CORD 0.75-2-2.5	740
034	682502-4	CORD GUARD 8-85	110
035	687001-1	STRAIN RELIEF	50
036	911133-5	PAN HEAD SCREW M4X18	50
037	911138-5	PAN HEAD SCREW M4X20	50
038	414994-7	HANDLE COVER	340
039	819063-3	MAKITA LABEL	30
400	743008-8	RUBBER PAD 170	1,160
402	152492-0	GRIP 36 COMPLETE	230
403	781008-0	WRENCH 17	160
404	782412-6	LOCK NUT WRENCH 28	230

SERVICE DRAWING

MODEL NO. 9227C

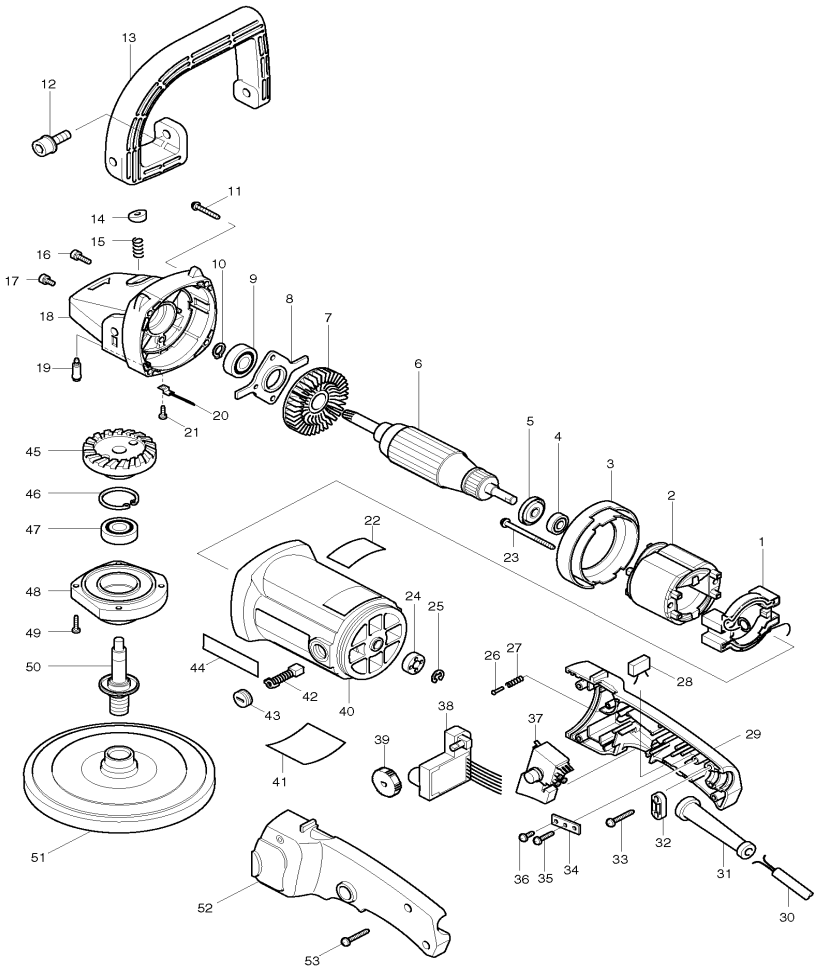

MODEL 9227C

ITEM	PARTS ID	DESCRIPTION	PRICE/BAHT
001	539168-0	SUPPORT ASS'Y	370
002	634293-3	FIELD 220/240V	
003	416253-5	BAFFLE PLATE	160
004	211031-6	BALL BEARING 608LLB	190
005	681644-1	INSULATION WASHER	60
008	285687-1	BEARING RETAINER 48	190
009	211106-1	BALL BEARING 6201LLB	400
010	961052-5	RETAINING RING S-12	40
011	266012-5	TAPPING SCREW 5X35	60
012	266171-5	HEX. SOCKET HEAD BOLT M8X25	110
013	416256-9	LOOP HANDLE	640
014	415491-6	PIN CAP	50
015	233072-2	COMPRESSION SPRING 8	30
016	911221-8	PAN HEAD SCREW M5X16	30
017	911211-1	PAN HEAD SCREW M5X12	30
018	159951-5	GEAR HOUSING COMPLETE	1,770
019	256504-2	SHOULDER PIN 9	140
020	632783-0	LEAD UNIT	150
021	652014-1	PAN HEAD SCREW M4X8	30
022	816330-7	INDICATION LABEL	80
023	266038-7	TAPPING SCREW 5X70	170
024	688110-9	MAGNET SLEEVE	290
025	961012-7	STOP RING E-6	20
026	255058-6	RIVET 2	20
027	233002-3	COMPRESSION SPRING 3	50
029	182917-0	HANDLE SET	920
030	691134-6	POWER SUPPLY CORD 0.75-3-2.5	1,010
031	682505-8	CORD GUARD 10-90	150
032	687053-2	STRAIN RELIEF	70
033	265995-6	TAPPING SCREW 4X18	40
034	654571-5	TERMINAL BLOCK	160
035	265995-6	TAPPING SCREW 4X18	40
036	652014-1	PAN HEAD SCREW M4X8	30
037	651282-3	SWITCH	1,550
038	631227-7	CONTROLLER 200-250V	4,030
039	271417-6	DIAL 28	210
040	182918-8	MOTOR HOUSING SET	1,400
042	B-80379	CARBON BRUSH SET CB-303A	190
043	643750-0	BRUSH HOLDER CAP	70
045	227512-0	SPIRAL BEVEL GEAR 52	1,820
046	962151-6	RETAINING RING R-32	90
047	211106-1	BALL BEARING 6201LLB	400
048	316896-2	BEARING BOX	730
049	266034-5	TAPPING SCREW CT 4X16	50
050	152553-6	SPINDLE COMPLETE	1,170
051	743054-1	PAD 165	1,700
052	182917-0	HANDLE SET	920
053	265995-6	TAPPING SCREW 4X18	40
A01	783204-6	HEX. WRENCH 6	110
A02	262542-4	SLEEVE 18	160
E01	192629-7	WOOL PAD 180	1,520

SERVICE DRAWING

MODEL NO. 9401

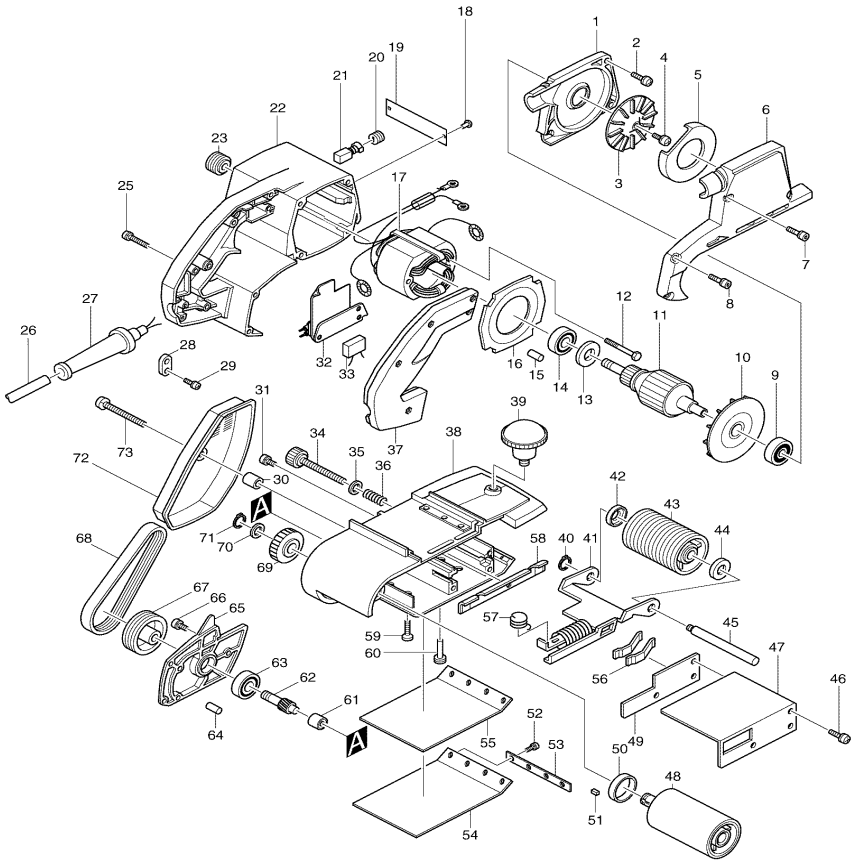

MODEL 9401

ITEM	PARTS ID	DESCRIPTION	PRICE/BAHT
001	151177-5	DUST COLLECTOR BRACKET	2,570
002	911226-8	PAN HEAD SCREW M5X18	30
003	241611-4	FAN 74	360
004	911211-1	PAN HEAD SCREW M5X12	30
005	343166-6	SEPARATOR	160
006	315772-7	DUST COLLECTOR COVER	2,230
007	911241-2	PAN HEAD SCREW M5X25	110
008	911241-2	PAN HEAD SCREW M5X25	110
009	211087-9	BALL BEARING 6200DDW	380
011	514205-1	ARMATURE ASS'Y 220V	
012	911270-5	PAN HEAD SCREW M5X45	80
013	681635-2	INSULATION WASHER	80
014	211066-7	BALL BEARING 6200LLB	410
015	263002-9	RUBBER PIN 4	30
016	411143-7	BAFFLE PLATE	120
017	524205-3	FIELD ASS'Y 220V	
018	953106-2	RIVET 0-5	20
020	643650-4	BRUSH HOLDER CAP 6.5-13.5	70
021	B-80329	CARBON BRUSH SET CB-153A	
022	156225-5	MOTOR HOUSING	2,750
023	222012-5	V-PULLEY 6-24L	370
025	911158-9	PAN HEAD SCREW M4X30	30
026	691227-9	POWER SUPPLY CORD 1.25-2-5.0	1,290
027	682504-0	CORD GUARD 10-85	190
028	687000-3	STRAIN RELIEF	40
029	911133-5	PAN HEAD SCREW M4X18	50
030	257504-5	SLEEVE 6	80
031	911221-8	PAN HEAD SCREW M5X16	30
034	251821-5	SCREW M8X72	230
035	941202-8	FLAT WASHER 8	50
036	231110-4	COMPRESSION SPRING 9	50
037	411142-9	HANDLE COVER	470
038	156226-3	FRAME	8,840
039	271207-7	KNOB 55	330
040	961052-5	RETAINING RING S-12	40
041	163039-5	TENSION ROLLER ARM	1,080
042	253922-5	CUP WASHER 12	110
043	152103-7	TENSION ROLLER COMPLETE	2,340
044	253922-5	CUP WASHER 12	110
045	325108-2	TENSION ROLLER SHAFT	450
046	911226-8	PAN HEAD SCREW M5X18	30
047	342331-4	BASE COVER	320
048	151121-2	DRIVING ROLLER COMPLETE	2,850
049	341195-3	BALANCE PLATE	290
050	253922-5	CUP WASHER 12	110
051	254202-2	KEY 4	90
052	911111-5	PAN HEAD SCREW M4X10	30
053	341079-5	STRAP WASHER	80
054	423029-3	CARBON PLATE 100MM	220
055	421093-8	CORK RUBBER PLATE	310
056	232029-0	LEAF SPRING	80
057	231520-5	TORSION SPRING 18	100
058	155885-0	EDGE SLIDER	290
059	912227-9	COUNTERSUNK HEAD SCREW M5X1	50
060	325109-0	SUPPORT PIN	130
061	212003-4	NEEDLE BEARING 810	290
062	221193-2	HELICAL GEAR 10	800
064	263002-9	RUBBER PIN 4	30
065	312549-1	GEAR COVER	750
066	911221-8	PAN HEAD SCREW M5X16	30
067	222038-7	V-PULLEY 6-55.7	1,890
068	225021-3	POLY V-BELT 6-355	1,000
069	221194-0	HELICAL GEAR 42	880
070	253312-2	THIN WASHER 12	50
071	961052-5	RETAINING RING S-12	40
072	343165-8	BELT COVER	390
073	911261-6	PAN HEAD SCREW M5X40	50
400	794135-4	ABRASIVE BELT 100X610 WA80	1,490
401	342332-2	STEP	290
402	423029-3	CARBON PLATE 100MM	220
403	122297-2	DUST BAG ASS'Y	1,150
C01	214101-0	BUSH	160

SERVICE DRAWING

MODEL NO. 9402

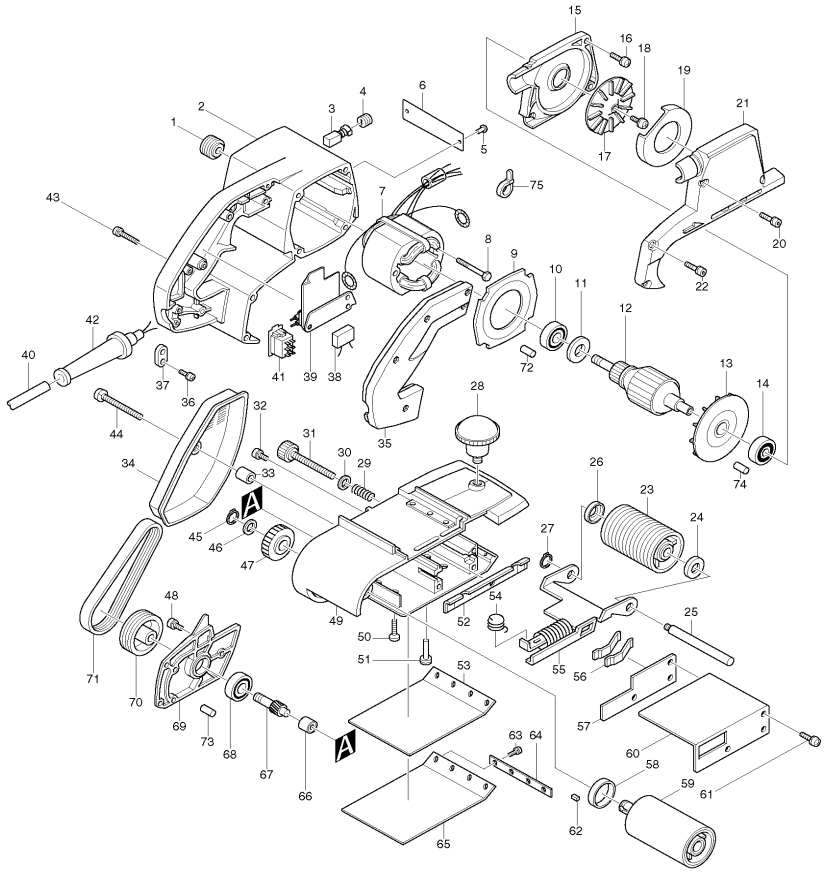

MODEL 9402

ITEM	PARTS ID	DESCRIPTION	PRICE/BAHT
001	222012-5	V-PULLEY 6-24L	370
002	157148-0	MOTOR HOUSING	2,720
003	B-80329	CARBON BRUSH SET CB-153A	
004	643650-4	BRUSH HOLDER CAP 6.5-13.5	70
005	953106-2	RIVET 0-5	20
007	524723-1	FIELD ASS'Y 220V	
008	911270-5	PAN HEAD SCREW M5X45	80
009	411143-7	BAFFLE PLATE	120
010	211066-7	BALL BEARING 6200LLB	410
011	681635-2	INSULATION WASHER	80
012	514205-1	ARMATURE ASS'Y 220V	
014	211087-9	BALL BEARING 6200DDW	380
015	151177-5	DUST COLLECTOR BRACKET	2,570
016	911226-8	PAN HEAD SCREW M5X18	30
017	241611-4	FAN 74	360
018	911211-1	PAN HEAD SCREW M5X12	30
019	343166-6	SEPARATOR	160
020	911241-2	PAN HEAD SCREW M5X25	110
021	315772-7	DUST COLLECTOR COVER	2,230
022	911241-2	PAN HEAD SCREW M5X25	110
023	152103-7	TENSION ROLLER COMPLETE	2,340
024	253922-5	CUP WASHER 12	110
025	325108-2	TENSION ROLLER SHAFT	450
026	253922-5	CUP WASHER 12	110
027	961052-5	RETAINING RING S-12	40
028	271207-7	KNOB 55	330
029	231110-4	COMPRESSION SPRING 9	50
030	941202-8	FLAT WASHER 8	50
031	251821-5	SCREW M8X72	230
032	911221-8	PAN HEAD SCREW M5X16	30
033	257504-5	SLEEVE 6	80
034	343165-8	BELT COVER	390
035	411142-9	HANDLE COVER	470
036	911133-5	PAN HEAD SCREW M4X18	50
037	687000-3	STRAIN RELIEF	40
039	651018-0	SWITCH HPAHR2-3S	970
040	691227-9	POWER SUPPLY CORD 1.25-2-5.0	1,290
041	651557-0	SWITCH SL210N-27	1,410
042	682504-0	CORD GUARD 10-85	190
043	911158-9	PAN HEAD SCREW M4X30	30
044	911261-6	PAN HEAD SCREW M5X40	50
045	961052-5	RETAINING RING S-12	40
046	253312-2	THIN WASHER 12	50
047	221194-0	HELICAL GEAR 42	880
048	911221-8	PAN HEAD SCREW M5X16	30
049	156226-3	FRAME	8,840
050	912227-9	COUNTERSUNK HEAD SCREW M5X1	50
051	325109-0	SUPPORT PIN	130
052	155885-0	EDGE SLIDER	290
053	421093-8	CORK RUBBER PLATE	310
054	231520-5	TORSION SPRING 18	100
055	163039-5	TENSION ROLLER ARM	1,080
056	232029-0	LEAF SPRING	80

ITEM	PARTS ID	DESCRIPTION	PRICE/BAHT
057	341195-3	BALANCE PLATE	290
058	253922-5	CUP WASHER 12	110
059	151121-2	DRIVING ROLLER COMPLETE	2,850
060	342331-4	BASE COVER	320
061	911226-8	PAN HEAD SCREW M5X18	30
062	254202-2	KEY 4	90
063	911111-5	PAN HEAD SCREW M4X10	30
064	341079-5	STRAP WASHER	80
065	423029-3	CARBON PLATE 100MM	220
066	212003-4	NEEDLE BEARING 810	290
067	221193-2	HELICAL GEAR 10	800
068	211066-7	BALL BEARING 6200LLB	410
069	312549-1	GEAR COVER	750
070	222038-7	V-PULLEY 6-55.7	1,890
071	225021-3	POLY V-BELT 6-355	1,000
072	263002-9	RUBBER PIN 4	30
073	263002-9	RUBBER PIN 4	30
074	263002-9	RUBBER PIN 4	30
075	687010-0	BAND	30
400	794135-4	ABRASIVE BELT 100X610 WA80	1,490
401	122297-2	DUST BAG ASS'Y	1,150
402	342332-2	STEP	290
403	423029-3	CARBON PLATE 100MM	220

SERVICE DRAWING

MODEL NO. 9403

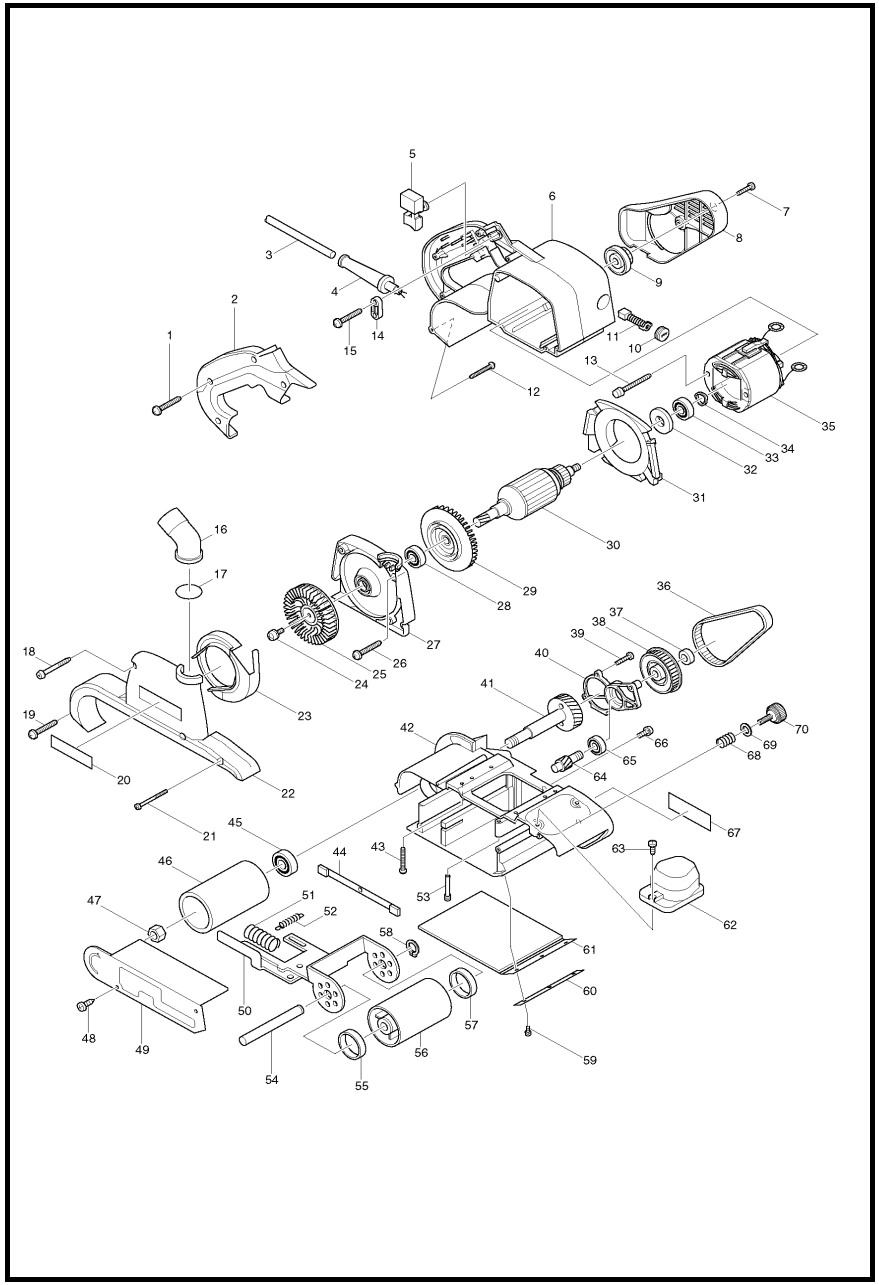

MODEL 9403

ITEM	PARTS ID	DESCRIPTION	PRICE/BAHT
001	265995-6	TAPPING SCREW 4X18	40
002	416496-9	HANDLE COVER	570
003	691025-1	POWER SUPPLY CORD 0.75-2-5.0	1,070
004	682505-8	CORD GUARD 10-90	150
005	651284-9	SWITCH SGEL115CDY-6	610
006	150981-9	MOTOR HOUSING COMPLETE	2,340
007	266034-5	TAPPING SCREW CT 4X16	50
008	416495-1	BELT COVER	400
009	222147-2	PULLEY 10-24.1	620
010	643750-0	BRUSH HOLDER CAP	70
011	B-80379	CARBON BRUSH SET CB-303A	190
012	265995-6	TAPPING SCREW 4X18	40
013	266056-5	TAPPING SCREW 5X45	110
014	687053-2	STRAIN RELIEF	70
015	265995-6	TAPPING SCREW 4X18	40
016	416497-7	DUST NOZZLE	170
017	213415-4	O RING 28	80
018	266069-6	TAPPING SCREW 4X45	80
019	265995-6	TAPPING SCREW 4X18	40
020	819064-1	MAKITA MARK	70
021	266203-8	TAPPING SCREW BIND CT 4X40	80
022	317018-7	DUST COLLECTOR COVER	830
023	416494-3	SEPARATOR	150
024	911213-7	PAN HEAD SCREW M5X12	40
025	241662-7	FAN 80	540
026	265995-6	TAPPING SCREW 4X18	40
027	317021-8	DUST COLLECTOR BRACKET	990
028	211088-7	BALL BEARING 6000DDW	300
031	416498-5	BAFFLE PLATE	170
032	681649-1	INSULATION WASHER	110
033	211088-7	BALL BEARING 6000DDW	300
034	267715-4	WAVE WASHER 20	50
035	596193-4	FIELD ASS'Y 220-240V	
036	225081-5	SYNCHRO BELT	430
037	931503-2	HEX. NUT M10	90
038	222148-0	PULLEY 11-55.6	670
039	266034-5	TAPPING SCREW CT 4X16	50
040	317020-0	GEAR COVER	500
041	153291-3	HELICAL GEAR 43 COMPLETE	1,250
042	150979-6	FRAME COMPLETE	5,140
043	265995-6	TAPPING SCREW 4X18	40
044	150846-5	EDGE SLIDER COMPLETE	230
045	211131-2	BALL BEARING 6001DDW	310
046	162199-0	DRIVING ROLLER	1,360
047	252087-0	HEX. NUT M12-19	130
048	266026-4	TAPPING SCREW BIND CT 4X12	30
049	344622-9	SAFETY COVER	240
050	163398-7	TENSION ROLLER ARM	960
051	233235-0	COMPRESSION SPRING 12	100
052	231819-8	TENSION SPRING 4	80
053	321980-0	SUPPORT PIN	170
054	323829-0	TENSION ROLLER SHAFT	410
055	253922-5	CUP WASHER 12	110
056	150978-8	TENSION ROLLER COMPLETE	1,310
057	253922-5	CUP WASHER 12	110
058	961052-5	RETAINING RING S-12	40
059	911118-1	PAN HEAD SCREW M4X12	30
060	344623-7	STRAP WASHER	110
061	150980-1	STEEL PLATE COMPLETE	570
062	416499-3	FRONT GRIP	410
063	266034-5	TAPPING SCREW CT 4X16	50
064	226551-7	HELICAL GEAR 12	560
065	211066-7	BALL BEARING 6200LLB	410
066	911213-7	PAN HEAD SCREW M5X12	40
067	859611-6	NAME PLATE 9403	150
068	231225-7	COMPRESSION SPRING 16	80
069	253707-9	FLAT WASHER 16	80
070	251815-0	SCREW M6X25	130
A01	794135-4	ABRASIVE BELT 100X610 WA80	1,490
A02	122562-9	DUST BAG ASS'Y	750

SERVICE DRAWING

MODEL NO. 9500NB

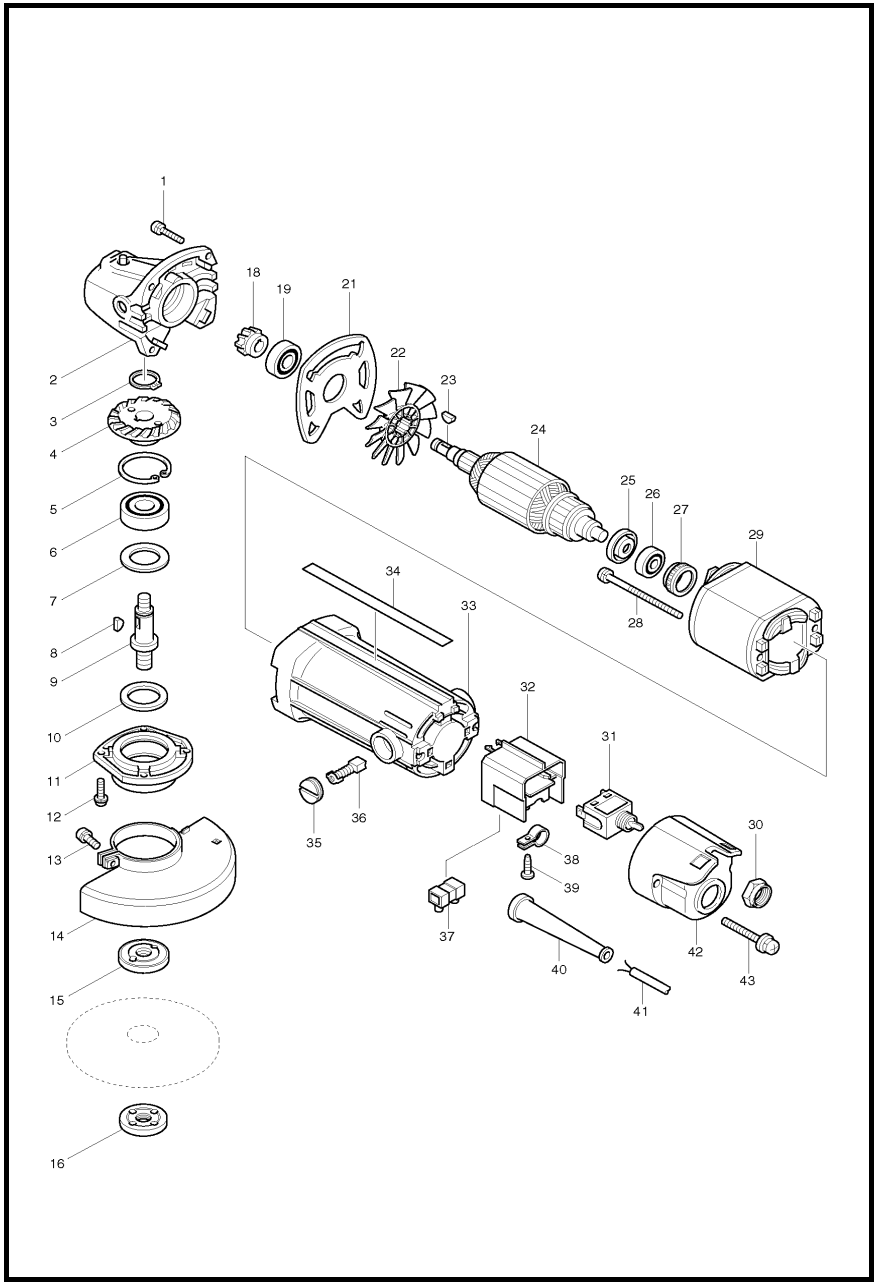

MODEL 9500NB

ITEM	PARTS ID	DESCRIPTION	PRICE/BAHT
001	911136-9	PAN HEAD SCREW M4X20	50
002	156448-5	GEAR HOUSING	1,410
003	961052-5	RETAINING RING S-12	40
004	227424-7	SPIRAL BEVEL GEAR 35	450
005	962151-6	RETAINING RING R-32	90
006	211106-1	BALL BEARING 6201LLB	400
007	253055-6	FLAT WASHER 12	50
008	254002-0	WOODRUFF KEY 3	80
009	324246-7	SPINDLE	390
010	443034-4	FELT RING 18	50
011	312998-2	BEARING BOX	640
012	911121-2	PAN HEAD SCREW M4X14	20
013	251391-4	PAN HEAD SCREW M5X16	40
014	154755-0	WHEEL COVER COMPLETE	260
015	224314-5	INNER FLANGE 30	330
016	224559-5	LOCK NUT 10-30	170
018	221318-8	SPIRAL BEVEL GEAR 14	570
019	211088-7	BALL BEARING 6000DDW	300
021	341398-9	PLATE	150
023	254002-0	WOODRUFF KEY 3	80
025	681636-0	INSULATION WASHER	60
026	210017-7	BALL BEARING 607DDW	250
027	421494-0	RUBBER RING 19	250
028	911596-5	PAN HEAD SCREW M4X70	100
030	652102-4	HEX. NUT M12	80
032	687116-4	SUPPORT	120
033	152675-2	MOTOR HOUSING COMPLETE	1,150
034	852662-8	NAME PLATE 9500NB	160
035	643550-8	BRUSH HOLDER CAP 5-8	100
036	B-80391	CARBON BRUSH SET CB-411A	
037	654532-5	TERMINAL BLOCK 1P	150
038	687650-4	STRAIN RELIEF	320
039	266192-7	TAPPING SCREW 4X14	50
040	682566-8	CORD GUARD 10	80
041	691015-4	POWER SUPPLY CORD 0.75-2-2.5	740
042	417388-5	REAR COVER	360
043	911258-5	PAN HEAD SCREW M5X35	30
A01	782401-1	LOCK NUT WRENCH 20	200

SERVICE DRAWING

MODEL NO. 9523NB

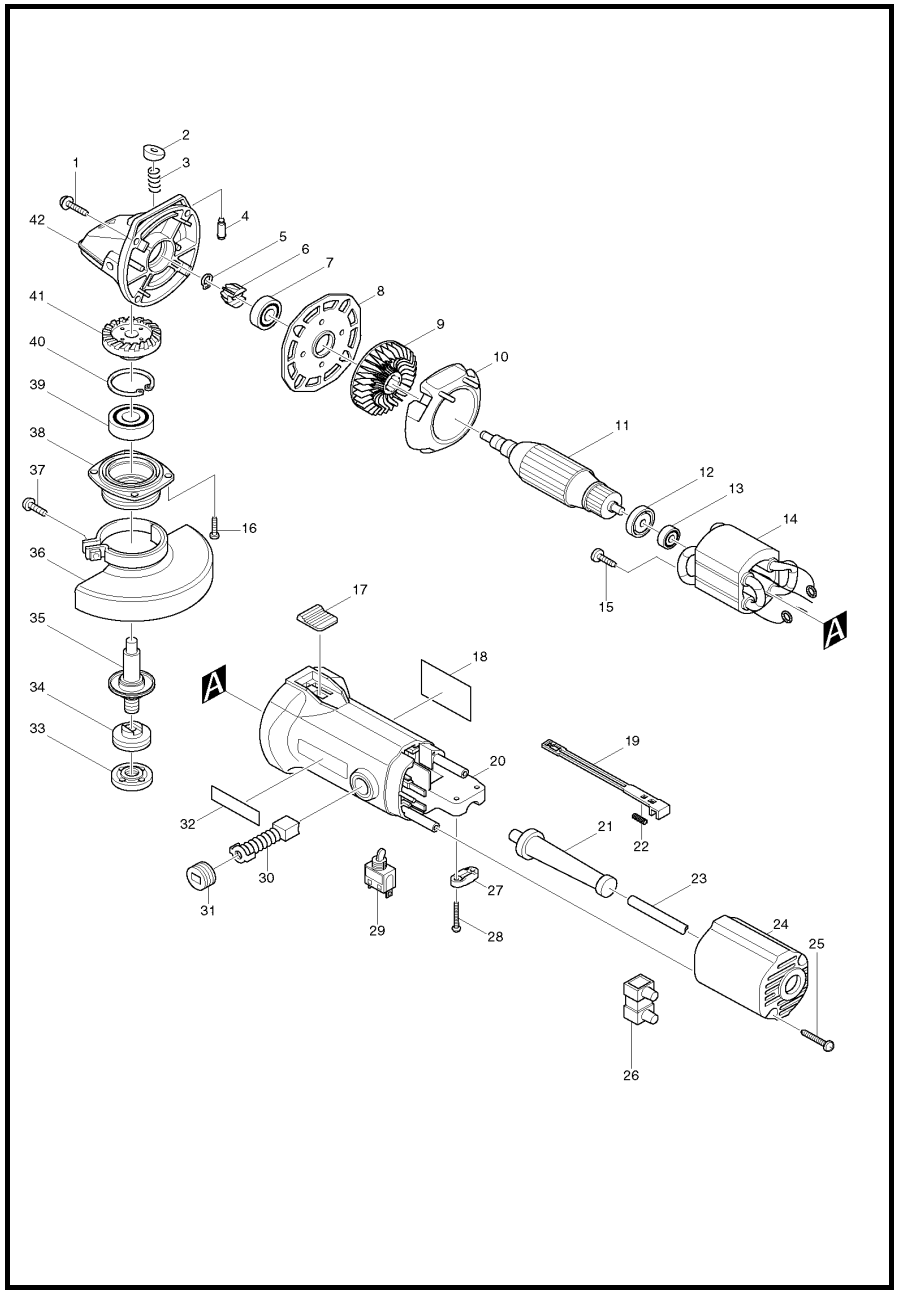

MODEL 9523NB

ITEM	PARTS ID	DESCRIPTION	PRICE/BAHT
001	266041-8	TAPPING SCREW 5X25	60
002	415491-6	PIN CAP	50
003	233072-2	COMPRESSION SPRING 8	30
004	256437-1	PIN 4	100
005	961002-0	RETAINING RING S-6	20
006	226799-1	SPIRAL BEVEL GEAR 11	370
007	211062-5	BALL BEARING 6000ZZ	360
008	285684-7	BEARING RETAINER 52	170
010	415954-2	BAFFLE PLATE	180
012	681638-6	INSULATING WASHER	70
013	211012-0	BALL BEARING 606ZZ	230
014	521623-6	FIELD ASS'Y 220-240V	
015	266007-8	TAPPING SCREW BIND PT 3X10	30
016	266034-5	TAPPING SCREW CT 4X16	50
017	415952-6	SWITCH KNOB	140
019	417352-6	SWITCH LEVER	110
020	159866-6	MOTOR HOUSING COMPLETE	1,210
021	682504-0	CORD GUARD 10-85	190
022	233285-5	COMPRESSION SPRING 4	30
023	691015-4	POWER SUPPLY CORD 0.75-2-2.5	740
024	415955-0	REAR COVER	390
025	265995-6	TAPPING SCREW 4X18	40
026	654532-5	TERMINAL BLOCK 1P	150
027	687053-2	STRAIN RELIEF	70
028	265995-6	TAPPING SCREW 4X18	40
029	651433-8	SWITCH ST115A-31	330
031	643928-5	BRUSH HOLDER CAP	100
033	224559-5	LOCK NUT 10-30	170
034	224314-5	INNER FLANGE 30	330
035	152523-5	SPINDLE COMPLETE	860
036	165187-6	WHEEL COVER	500
037	251391-4	PAN HEAD SCREW M5X16	40
038	316800-1	BEARING BOX	720
039	211129-9	BALL BEARING 6201DDW	300
040	962151-6	RETAINING RING R-32	90
041	226798-3	SPIRAL BEVEL GEAR 36	370
042	159867-4	GEAR HOUSING COMPLETE	1,510
A02	782401-1	LOCK NUT WRENCH 20	200

SERVICE DRAWING

MODEL NO. 9533

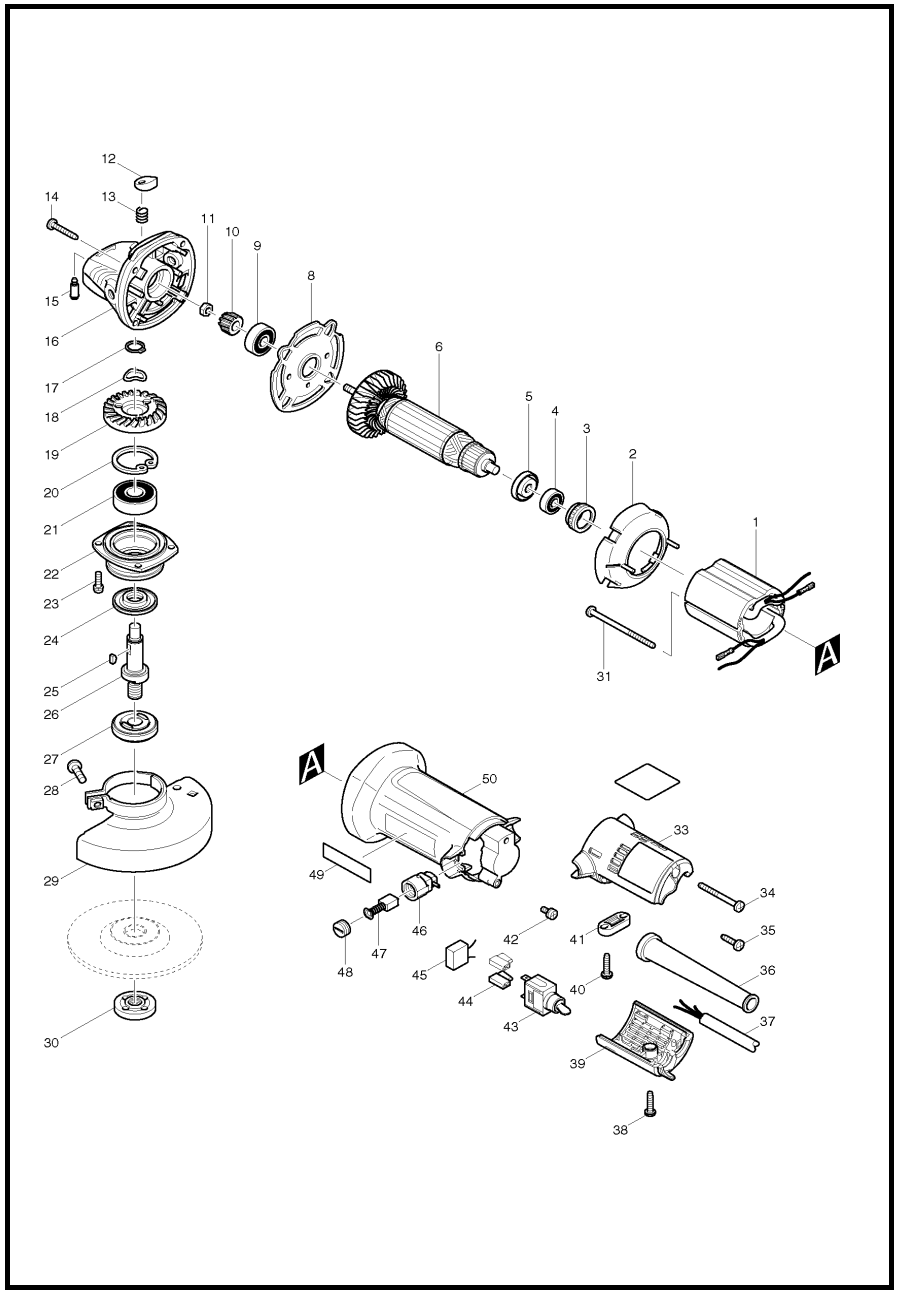

MODEL 9533

ITEM	PARTS ID	DESCRIPTION	PRICE/BAHT
002	418584-8	BAFFLE PLATE	100
003	421494-0	RUBBER RING 19	250
004	210017-7	BALL BEARING 607DDW	250
005	681636-0	INSULATION WASHER	60
006	517588-8	ARMATURE ASS'Y 220V	
008	285712-8	BEARING RETAINER 40	150
009	210032-1	BALL BEARING 628DDW	320
010	227461-1	SPIRAL BEVEL GEAR 11	640
011	252137-1	HEX. NUT M5-8	20
012	415491-6	PIN CAP	50
013	233072-2	COMPRESSION SPRING 8	30
014	266040-0	TAPPING SCREW CT 4X25	50
015	256437-1	PIN 4	100
016	153846-4	GEAR HOUSING COMPLETE	1,530
017	961052-5	RETAINING RING S-12	40
018	253904-7	WAVE WASHER 12	40
019	227467-9	SPIRAL BEVEL GEAR 36	1,020
020	962151-6	RETAINING RING R-32	90
021	211149-3	BALL BEARING 6201DDW	340
022	316600-9	BEARING BOX	550
023	265168-1	PAN HEAD SCREW M4X14	60
024	415492-4	LABYRINTH RING	80
025	254011-9	WOODRUFF KEY 4	90
026	324451-6	SPINDLE	550
027	224314-5	INNER FLANGE 30	330
028	251391-4	PAN HEAD SCREW M5X16	40
029	165187-6	WHEEL COVER	500
030	224559-5	LOCK NUT 10-30	170
031	266187-0	TAPPING SCREW BIND CT 4X65	90
033	183780-4	UPPER LOWER REAR COVER SET	560
034	266203-8	TAPPING SCREW BIND CT 4X40	80
035	266034-5	TAPPING SCREW CT 4X16	50
036	682566-8	CORD GUARD 10	80
037	691134-6	POWER SUPPLY CORD 0.75-3-2.5	1,010
038	265995-6	TAPPING SCREW 4X18	40
039	183780-4	UPPER LOWER REAR COVER SET	560
040	265995-6	TAPPING SCREW 4X18	40
041	687053-2	STRAIN RELIEF	70
042	652014-1	PAN HEAD SCREW M4X8	30
043	651426-5	SWITCH STL115ADF-AD	230
044	686039-3	RECEPTACLE SLEEVE	30
046	643922-7	BRUSH HOLDER	190
047	B-80391	CARBON BRUSH SET CB-411A	
048	643985-3	BRUSH HOLDER CAP	100
049	819063-3	MAKITA LABEL	30
050	187624-0	MOTOR HOUSING SET	1,730
A02	782401-1	LOCK NUT WRENCH 20	200

SERVICE DRAWING

MODEL NO. 9533B

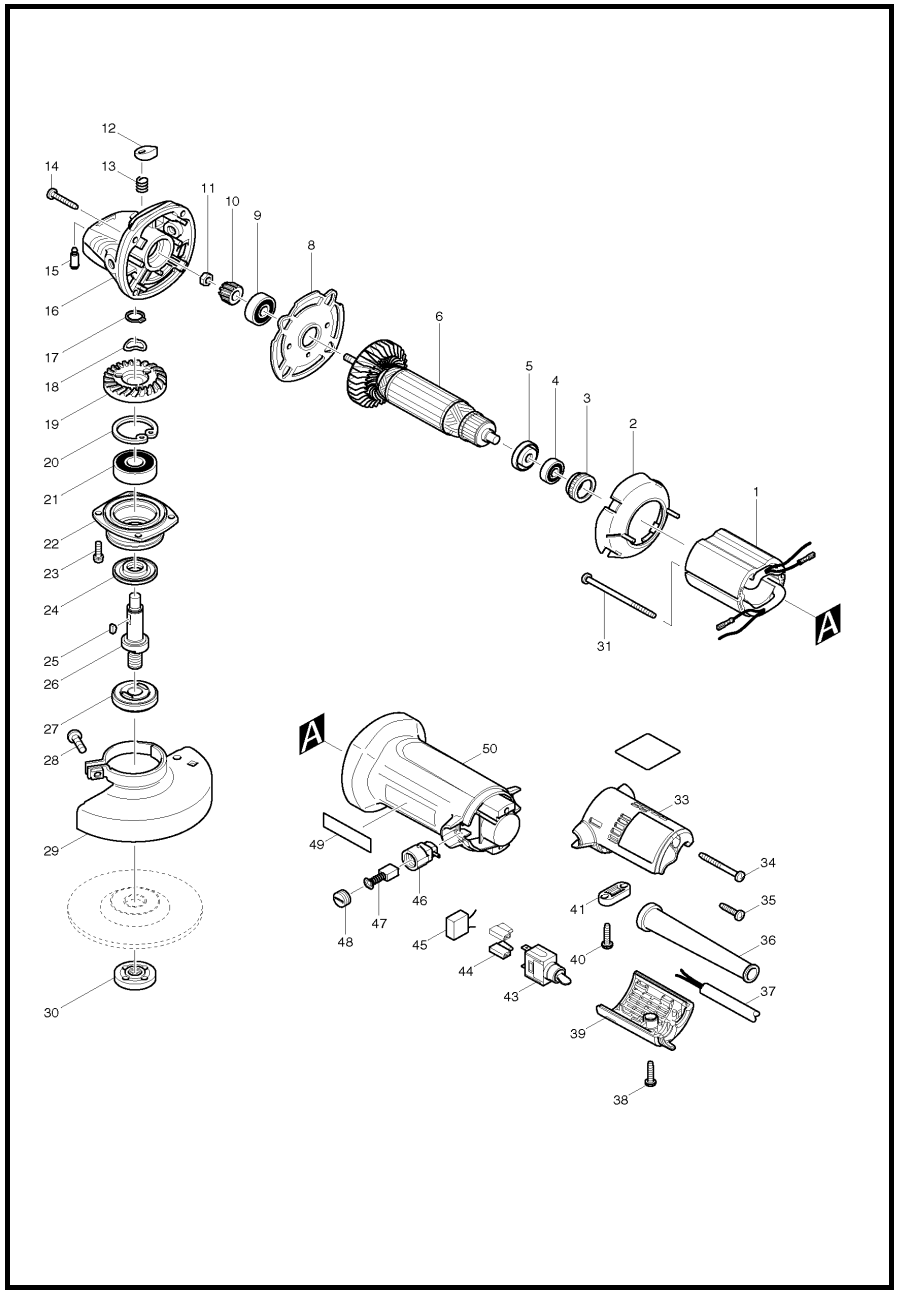

MODEL 9533B

ITEM	PARTS ID	DESCRIPTION	PRICE/BAHT
001	623503-3	FIELD 220-240V	
002	418584-8	BAFFLE PLATE	100
003	421494-0	RUBBER RING 19	250
004	210017-7	BALL BEARING 607DDW	250
005	681636-0	INSULATION WASHER	60
006	517588-8	ARMATURE ASS'Y 220V	
008	285712-8	BEARING RETAINER 40	150
009	210032-1	BALL BEARING 628DDW	320
010	227461-1	SPIRAL BEVEL GEAR 11	640
011	252137-1	HEX. NUT M5-8	20
012	415491-6	PIN CAP	50
013	233072-2	COMPRESSION SPRING 8	30
014	265999-8	TAPPING SCREW 4X25	30
015	256437-1	PIN 4	100
016	153846-4	GEAR HOUSING COMPLETE	1,530
017	961052-5	RETAINING RING S-12	40
018	253904-7	WAVE WASHER 12	40
019	227467-9	SPIRAL BEVEL GEAR 36	1,020
020	962151-6	RETAINING RING R-32	90
021	211149-3	BALL BEARING 6201DDW	340
022	316600-9	BEARING BOX	550
023	265168-1	PAN HEAD SCREW M4X14	60
024	415492-4	LABYRINTH RING	80
025	254011-9	WOODRUFF KEY 4	90
026	324451-6	SPINDLE	550
027	224314-5	INNER FLANGE 30	330
028	251391-4	PAN HEAD SCREW M5X16	40
029	165187-6	WHEEL COVER	500
030	224559-5	LOCK NUT 10-30	170
031	266004-4	TAPPING SCREW 4X70	120
033	183780-4	UPPER LOWER REAR COVER SET	560
034	266048-4	TAPPING SCREW 4X40	60
035	265995-6	TAPPING SCREW 4X18	40
036	682566-8	CORD GUARD 10	80
037	691015-4	POWER SUPPLY CORD 0.75-2-2.5	740
038	265995-6	TAPPING SCREW 4X18	40
039	183780-4	UPPER LOWER REAR COVER SET	560
040	265995-6	TAPPING SCREW 4X18	40
041	687053-2	STRAIN RELIEF	70
044	686039-3	RECEPTACLE SLEEVE	30
046	643922-7	BRUSH HOLDER	190
047	B-80391	CARBON BRUSH SET CB-411A	
048	643985-3	BRUSH HOLDER CAP	100
050	183788-8	MOTOR HOUSING	660
A02	782401-1	LOCK NUT WRENCH 20	200

SERVICE DRAWING

MODEL NO. 9533BL

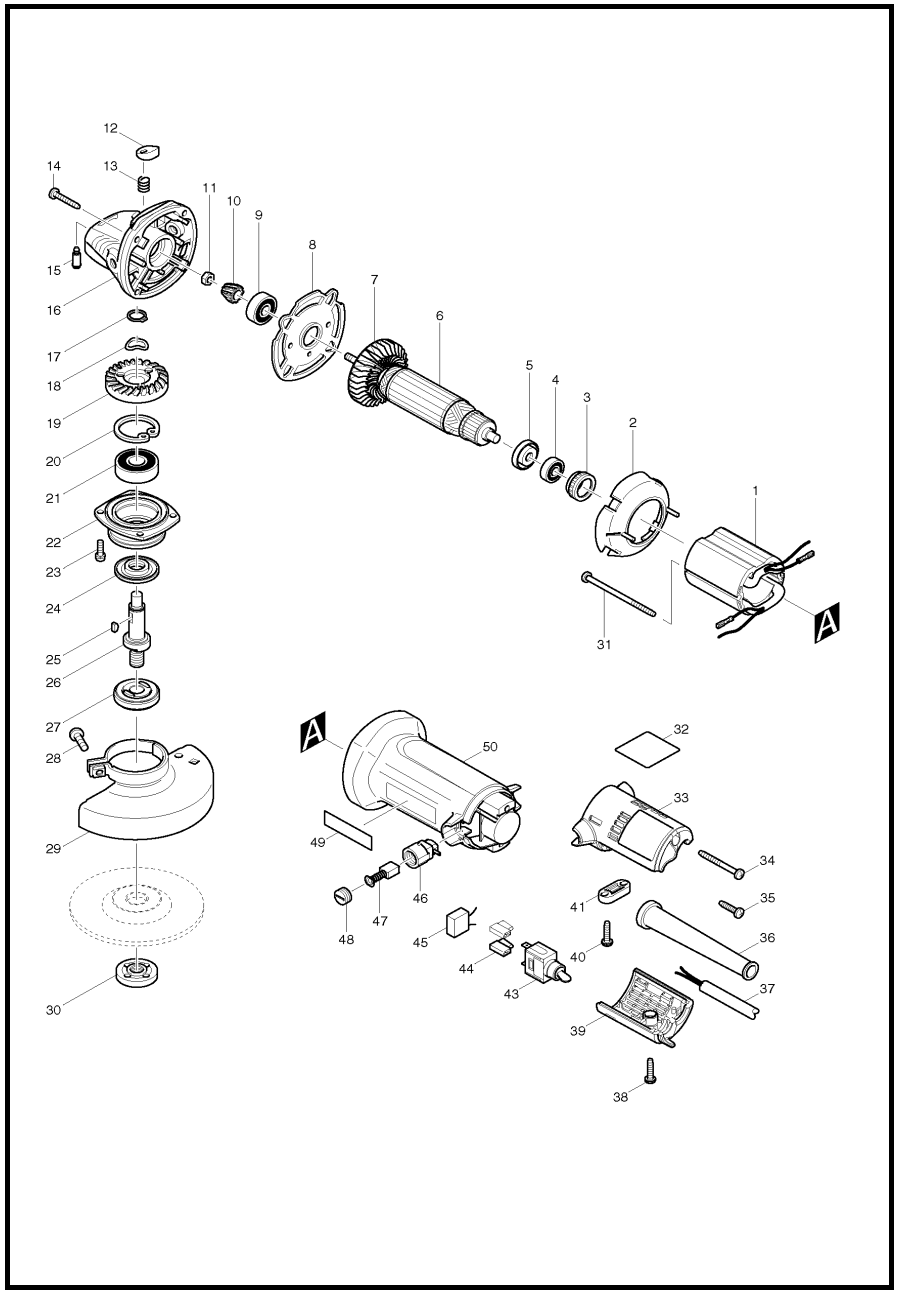

MODEL 9533BL

ITEM	PARTS ID	DESCRIPTION	PRICE/BAHT
001	623503-3	FIELD 220-240V	
002	418584-8	BAFFLE PLATE	100
003	421494-0	RUBBER RING 19	250
004	210017-7	BALL BEARING 607DDW	250
005	681636-0	INSULATION WASHER	60
006	517588-8	ARMATURE ASS'Y 220V	
008	285712-8	BEARING RETAINER 40	150
009	210032-1	BALL BEARING 628DDW	320
010	227462-9	SPIRAL BEVEL GEAR 9	610
011	252137-1	HEX. NUT M5-8	20
012	415491-6	PIN CAP	50
013	233072-2	COMPRESSION SPRING 8	30
014	265999-8	TAPPING SCREW 4X25	30
015	256437-1	PIN 4	100
016	153846-4	GEAR HOUSING COMPLETE	1,530
017	961052-5	RETAINING RING S-12	40
018	253904-7	WAVE WASHER 12	40
019	227466-1	SPIRAL BEVEL GEAR 38	1,090
020	962151-6	RETAINING RING R-32	90
021	211149-3	BALL BEARING 6201DDW	340
022	316600-9	BEARING BOX	550
023	265168-1	PAN HEAD SCREW M4X14	60
024	415492-4	LABYRINTH RING	80
025	254011-9	WOODRUFF KEY 4	90
026	324451-6	SPINDLE	550
027	224314-5	INNER FLANGE 30	330
028	251391-4	PAN HEAD SCREW M5X16	40
029	165187-6	WHEEL COVER	500
030	224559-5	LOCK NUT 10-30	170
031	266004-4	TAPPING SCREW 4X70	120
033	183983-0	UPPER LOWER REAR COVER SET	1,010
034	266048-4	TAPPING SCREW 4X40	60
035	265995-6	TAPPING SCREW 4X18	40
036	682566-8	CORD GUARD 10	80
037	691015-4	POWER SUPPLY CORD 0.75-2-2.5	740
038	265995-6	TAPPING SCREW 4X18	40
039	183983-0	UPPER LOWER REAR COVER SET	1,010
040	265995-6	TAPPING SCREW 4X18	40
041	687053-2	STRAIN RELIEF	70
043	651426-5	SWITCH STL115ADF-AD	230
044	686039-3	RECEPTACLE SLEEVE	30
046	643922-7	BRUSH HOLDER	190
047	B-80391	CARBON BRUSH SET CB-411A	
048	643985-3	BRUSH HOLDER CAP	100
050	183788-8	MOTOR HOUSING	660
A01	782401-1	LOCK NUT WRENCH 20	200

SERVICE DRAWING

MODEL NO. 9533L

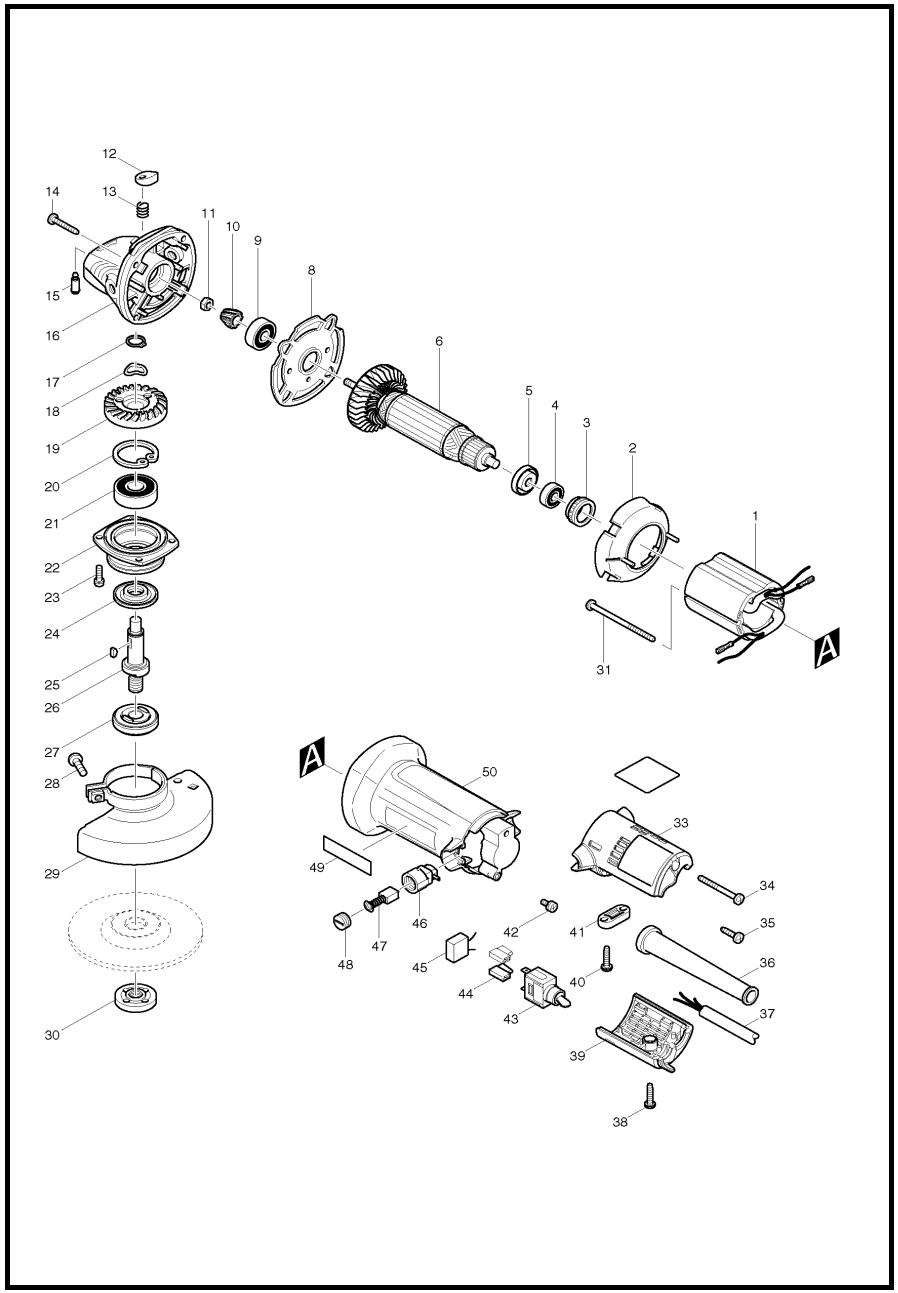

MODEL 9533L

ITEM	PARTS ID	DESCRIPTION	PRICE/BAHT
001	623513-0	FIELD 220-240V	
002	418584-8	BAFFLE PLATE	100
003	421494-0	RUBBER RING 19	250
004	210017-7	BALL BEARING 607DDW	250
005	681636-0	INSULATION WASHER	60
006	517588-8	ARMATURE ASS'Y 220V	
008	285712-8	BEARING RETAINER 40	150
009	210032-1	BALL BEARING 628DDW	320
010	227462-9	SPIRAL BEVEL GEAR 9	610
011	252137-1	HEX. NUT M5-8	20
012	415491-6	PIN CAP	50
013	233072-2	COMPRESSION SPRING 8	30
014	266040-0	TAPPING SCREW CT 4X25	50
015	256437-1	PIN 4	100
016	153846-4	GEAR HOUSING COMPLETE	1,530
017	961052-5	RETAINING RING S-12	40
018	253904-7	WAVE WASHER 12	40
019	227466-1	SPIRAL BEVEL GEAR 38	1,090
020	962151-6	RETAINING RING R-32	90
021	211149-3	BALL BEARING 6201DDW	340
022	316600-9	BEARING BOX	550
023	265168-1	PAN HEAD SCREW M4X14	60
024	415492-4	LABYRINTH RING	80
025	254011-9	WOODRUFF KEY 4	90
026	324451-6	SPINDLE	550
027	224314-5	INNER FLANGE 30	330
028	251391-4	PAN HEAD SCREW M5X16	40
029	165187-6	WHEEL COVER	500
030	224559-5	LOCK NUT 10-30	170
031	266187-0	TAPPING SCREW BIND CT 4X65	90
033	183780-4	UPPER LOWER REAR COVER SET	560
034	266203-8	TAPPING SCREW BIND CT 4X40	80
035	266034-5	TAPPING SCREW CT 4X16	50
036	682566-8	CORD GUARD 10	80
037	691134-6	POWER SUPPLY CORD 0.75-3-2.5	1,010
038	265995-6	TAPPING SCREW 4X18	40
039	183780-4	UPPER LOWER REAR COVER SET	560
040	265995-6	TAPPING SCREW 4X18	40
041	687053-2	STRAIN RELIEF	70
042	652014-1	PAN HEAD SCREW M4X8	30
043	651426-5	SWITCH STL115ADF-AD	230
044	686039-3	RECEPTACLE SLEEVE	30
046	643922-7	BRUSH HOLDER	190
047	B-80391	CARBON BRUSH SET CB-411A	
048	643985-3	BRUSH HOLDER CAP	100
050	187624-0	MOTOR HOUSING SET	1,730
A02	782401-1	LOCK NUT WRENCH 20	200

SERVICE DRAWING

MODEL NO. 9553B

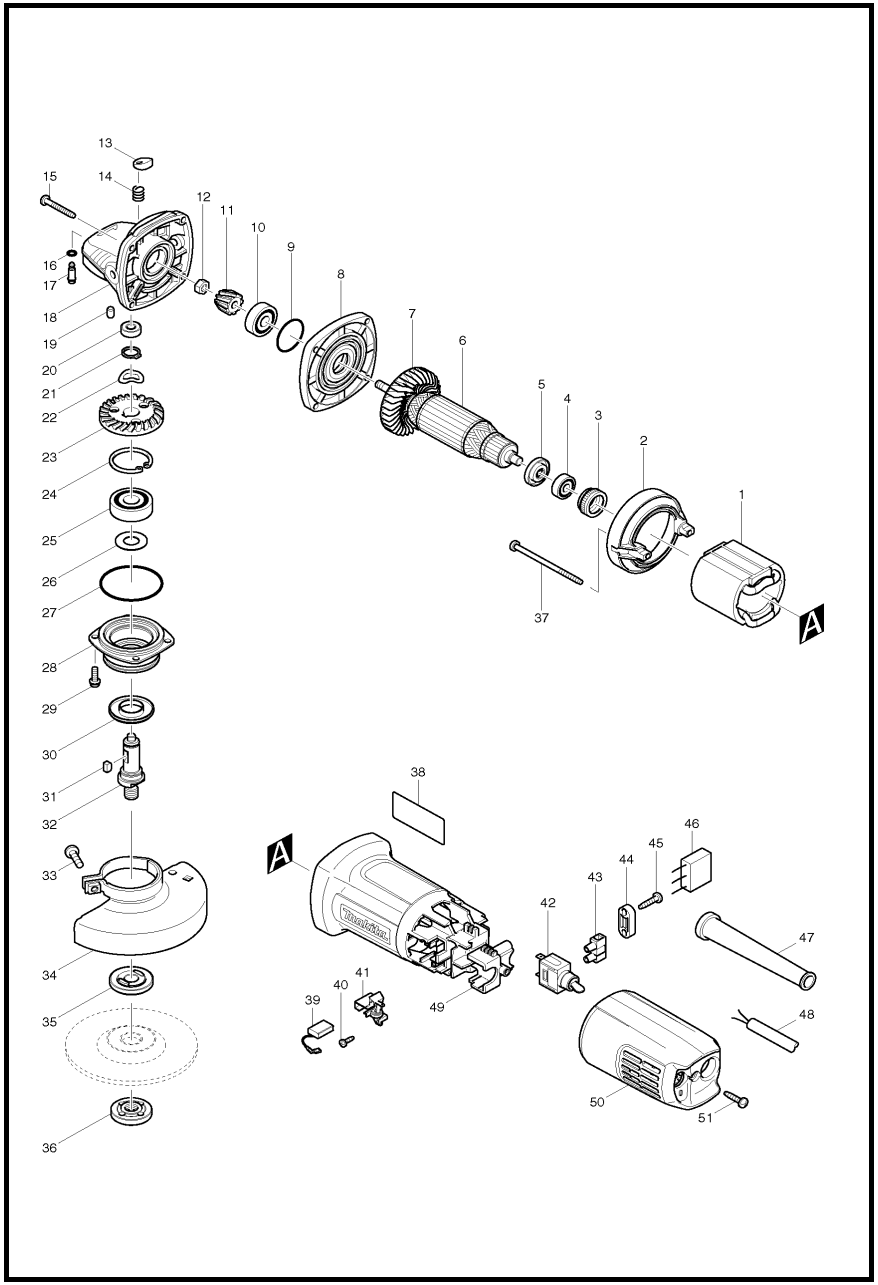

MODEL 9553B

ITEM	PARTS ID	DESCRIPTION	PRICE/BAHT
001	621718-6	FIELD 220-240V	
002	418795-5	BAFFLE PLATE	100
003	421868-5	LABYRINTH RUBBER RING 19	100
004	211021-9	BALL BEARING 607LLB	240
005	681636-0	INSULATION WASHER	60
006	510086-1	ARMATURE ASS'Y 220-240V	
008	317821-6	GEAR HOUSING COVER	320
009	213445-5	O-RING 26	30
010	210042-8	BALL BEARING 629LLB	250
011	227471-8	SPIRAL BEVEL GEAR 11	350
012	252186-8	HEX. NUT M6	70
013	417771-6	PIN CAP	110
014	233376-2	COMPRESSION SPRING 8	70
015	266361-0	TAPPING SCREW 4X30	70
016	213960-9	O RING 5	100
017	256486-8	SHOULDER PIN 4	90
018	317814-3	GEAR HOUSING	510
019	263002-9	RUBBER PIN 4	30
020	210006-2	BALL BEARING 696ZZ	310
021	961052-5	RETAINING RING S-12	40
022	267794-2	WAVE WASHER 12	100
023	227472-6	SPIRAL BEVEL GEAR 36	390
023	227506-5	SPIRAL BEVEL GEAR 36	410
024	962151-6	RETAINING RING R-32	90
025	211129-9	BALL BEARING 6201DDW	300
026	267238-2	FLAT WASHER 12	100
027	213622-9	O RING 45	110
028	317819-3	BEARING BOX	250
029	265099-4	PAN HEAD SCREW M4X14	70
030	345464-4	LABYRINTH RING	100
031	254011-9	WOODRUFF KEY 4	90
032	324488-3	SPINDLE	310
033	265103-9	PAN HEAD SCREW M5X14	100
034	125266-2	WHEEL COVER ASS'Y	230
035	224314-5	INNER FLANGE 30	330
036	224559-5	LOCK NUT 10-30	170
037	266325-4	TAPPING SCREW 4X70	30
040	266007-8	TAPPING SCREW BIND PT 3X10	30
041	643760-7	BRUSH HOLDER	260
042	651427-3	SWITCH STL115ADT-D	210
043	654532-5	TERMINAL BLOCK 1P	150
044	687140-7	STRAIN RELIEF	40
045	266326-2	TAPPING SCREW 4X18	30
047	682566-8	CORD GUARD 10	80
048	691015-4	POWER SUPPLY CORD 0.75-2-2.5	740
049	419091-4	MOTOR HOUSING	460
050	419092-2	REAR COVER	210
051	266326-2	TAPPING SCREW 4X18	30
A01	782420-7	LOCK NUT WRENCH 20	130

SERVICE DRAWING

MODEL NO. 9553NB

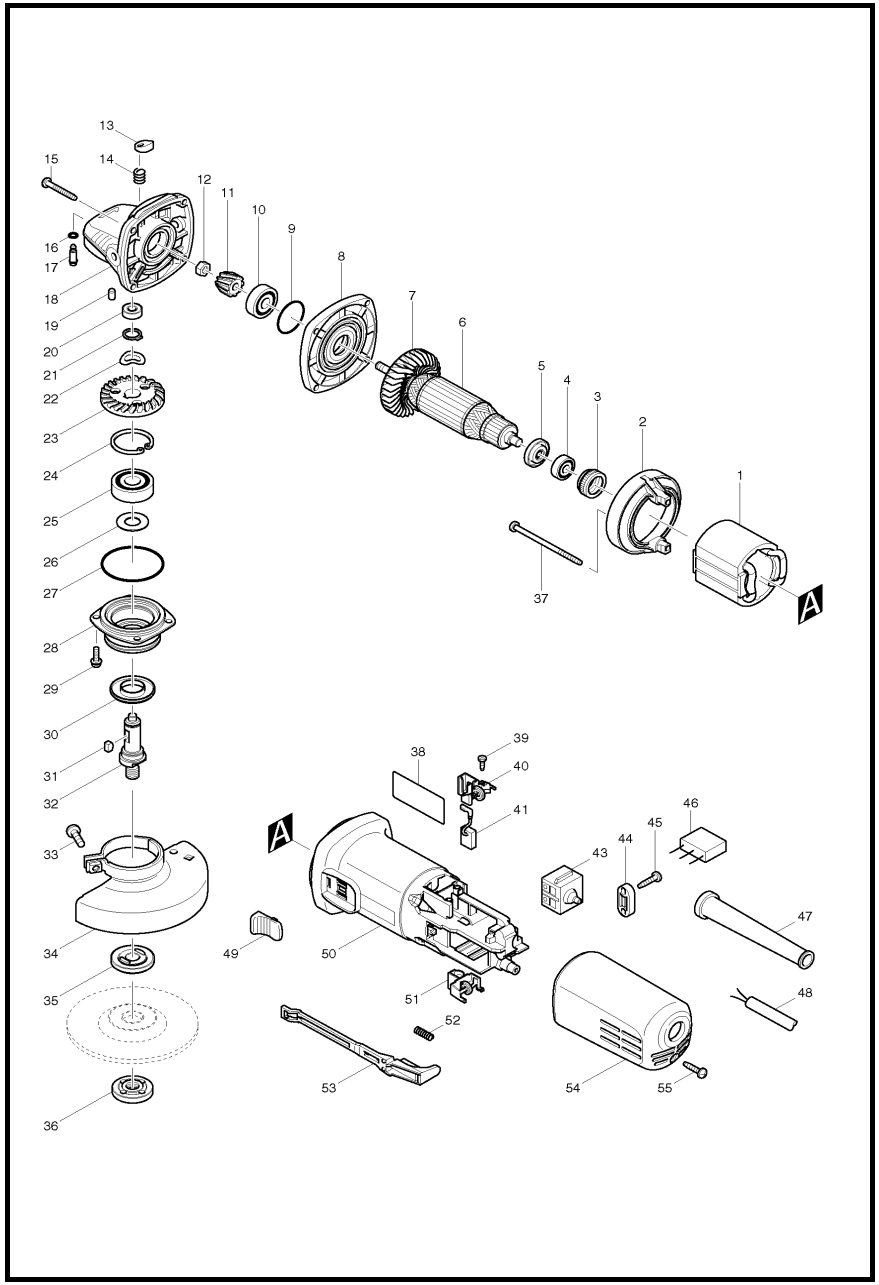

MODEL 9553NB

ITEM	PARTS ID	DESCRIPTION	PRICE/BAHT
001	621713-6	FIELD 220-240V	
002	418795-5	BAFFLE PLATE	100
003	421868-5	LABYRINTH RUBBER RING 19	100
004	211021-9	BALL BEARING 607LLB	240
005	681636-0	INSULATION WASHER	60
006	510086-1	ARMATURE ASS'Y 220-240V	
008	317821-6	GEAR HOUSING COVER	320
009	213445-5	O-RING 26	30
010	210042-8	BALL BEARING 629LLB	250
011	227471-8	SPIRAL BEVEL GEAR 11	350
012	252186-8	HEX. NUT M6	70
013	417771-6	PIN CAP	110
014	233376-2	COMPRESSION SPRING 8	70
015	266361-0	TAPPING SCREW 4X30	70
016	213960-9	O RING 5	100
017	256486-8	SHOULDER PIN 4	90
018	317814-3	GEAR HOUSING	510
019	263002-9	RUBBER PIN 4	30
020	210006-2	BALL BEARING 696ZZ	310
021	961052-5	RETAINING RING S-12	40
022	267794-2	WAVE WASHER 12	100
023	227506-5	SPIRAL BEVEL GEAR 36	410
023	227472-6	SPIRAL BEVEL GEAR 36	390
024	962151-6	RETAINING RING R-32	90
025	211129-9	BALL BEARING 6201DDW	300
026	267238-2	FLAT WASHER 12	100
027	213622-9	O RING 45	110
028	317819-3	BEARING BOX	250
029	265099-4	PAN HEAD SCREW M4X14	70
030	345464-4	LABYRINTH RING	100
031	254011-9	WOODRUFF KEY 4	90
032	324488-3	SPINDLE	310
033	265103-9	PAN HEAD SCREW M5X14	100
034	125266-2	WHEEL COVER ASS'Y	230
035	224314-5	INNER FLANGE 30	330
036	224559-5	LOCK NUT 10-30	170
037	266325-4	TAPPING SCREW 4X70	30
039	266007-8	TAPPING SCREW BIND PT 3X10	30
040	643760-7	BRUSH HOLDER	260
041	195002-0	CARBON BRUSH SET CB-325/329	
043	650621-4	SWITCH PS10	220
044	687140-7	STRAIN RELIEF	40
045	266326-2	TAPPING SCREW 4X18	30
047	682566-8	CORD GUARD 10	80
048	691015-4	POWER SUPPLY CORD 0.75-2-2.5	740
049	419566-3	SWITCH KNOB	100
050	418794-7	MOTOR HOUSING	450
051	643760-7	BRUSH HOLDER	260
052	233121-5	COMPRESSION SPRING 4	60
053	418796-3	SWITCH LEVER C	90
054	418726-4	REAR COVER	180
055	266326-2	TAPPING SCREW 4X18	30
A01	153489-2	GRIP 36 COMPLETE	180

ITEM	PARTS ID	DESCRIPTION	PRICE/BAHT
A02	782420-7	LOCK NUT WRENCH 20	130

SERVICE DRAWING

MODEL NO. 9556HN

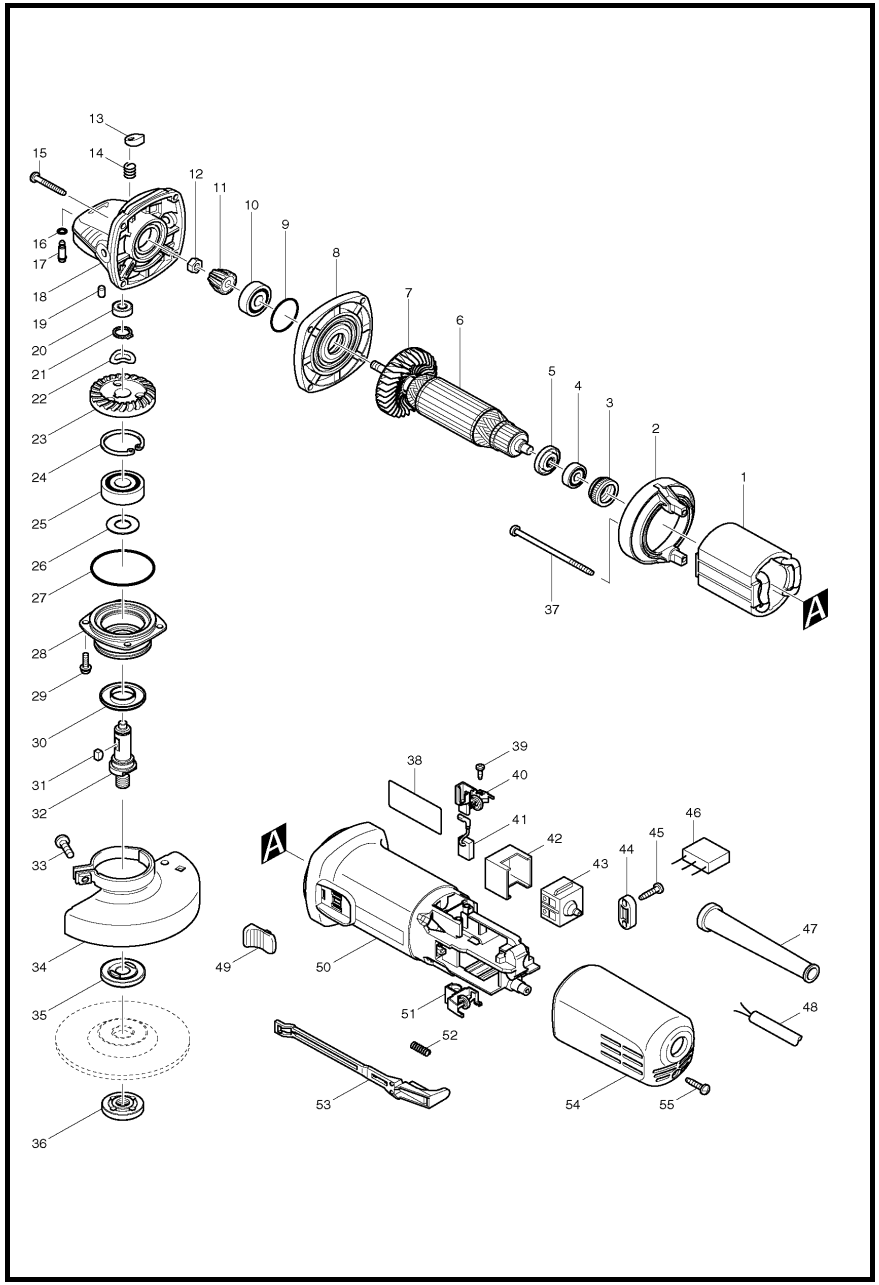

MODEL 9556HN

ITEM	PARTS ID	DESCRIPTION	PRICE/BAHT
002	418770-1	BAFFLE PLATE	120
003	421868-5	LABYRINTH RUBBER RING 19	100
004	211021-9	BALL BEARING 607LLB	240
005	681636-0	INSULATION WASHER	60
008	317821-6	GEAR HOUSING COVER	320
009	213445-5	O-RING 26	30
010	210042-8	BALL BEARING 629LLB	250
011	227541-3	SPIRAL BEVEL GEAR 10	460
012	252186-8	HEX. NUT M6	70
013	417771-6	PIN CAP	110
014	233376-2	COMPRESSION SPRING 8	70
015	266361-0	TAPPING SCREW 4X30	70
016	213960-9	O RING 5	100
017	256486-8	SHOULDER PIN 4	90
018	317814-3	GEAR HOUSING	510
019	263002-9	RUBBER PIN 4	30
020	210006-2	BALL BEARING 696ZZ	310
021	961052-5	RETAINING RING S-12	40
022	267794-2	WAVE WASHER 12	100
023	227542-1	SPIRAL BEVEL GEAR 37	560
024	962151-6	RETAINING RING R-32	90
025	211129-9	BALL BEARING 6201DDW	300
026	267238-2	FLAT WASHER 12	100
027	213622-9	O RING 45	110
028	317819-3	BEARING BOX	250
029	265099-4	PAN HEAD SCREW M4X14	70
030	345464-4	LABYRINTH RING	100
031	254011-9	WOODRUFF KEY 4	90
032	324488-3	SPINDLE	310
033	265103-9	PAN HEAD SCREW M5X14	100
034	125266-2	WHEEL COVER ASS'Y	230
035	224314-5	INNER FLANGE 30	330
036	224559-5	LOCK NUT 10-30	170
037	266345-8	TAPPING SCREW 4X80	70
038	865806-1	9556HN NAME PLATE	
039	266007-8	TAPPING SCREW BIND PT 3X10	30
040	643760-7	BRUSH HOLDER	260
041	195002-0	CARBON BRUSH SET CB-325/329	
042	418729-8	SPACER	110
043	651947-7	SWITCH 1247.0302	200
044	687053-2	STRAIN RELIEF	70
045	266326-2	TAPPING SCREW 4X18	30
047	682566-8	CORD GUARD 10	80
048	691015-4	POWER SUPPLY CORD 0.75-2-2.5	740
049	419566-3	SWITCH KNOB	100
050	418725-6	MOTOR HOUSING	620
051	643760-7	BRUSH HOLDER	260
052	233121-5	COMPRESSION SPRING 4	60
053	418728-0	SWITCH LEVER B	90
054	418726-4	REAR COVER	180
055	266326-2	TAPPING SCREW 4X18	30
A01	153489-2	GRIP 36 COMPLETE	180
A02	782420-7	LOCK NUT WRENCH 20	130
A03	D-05197	DIAMOND WHEEL 105MM(SEG,DRY)	810

SERVICE DRAWING

MODEL NO. 9556NB

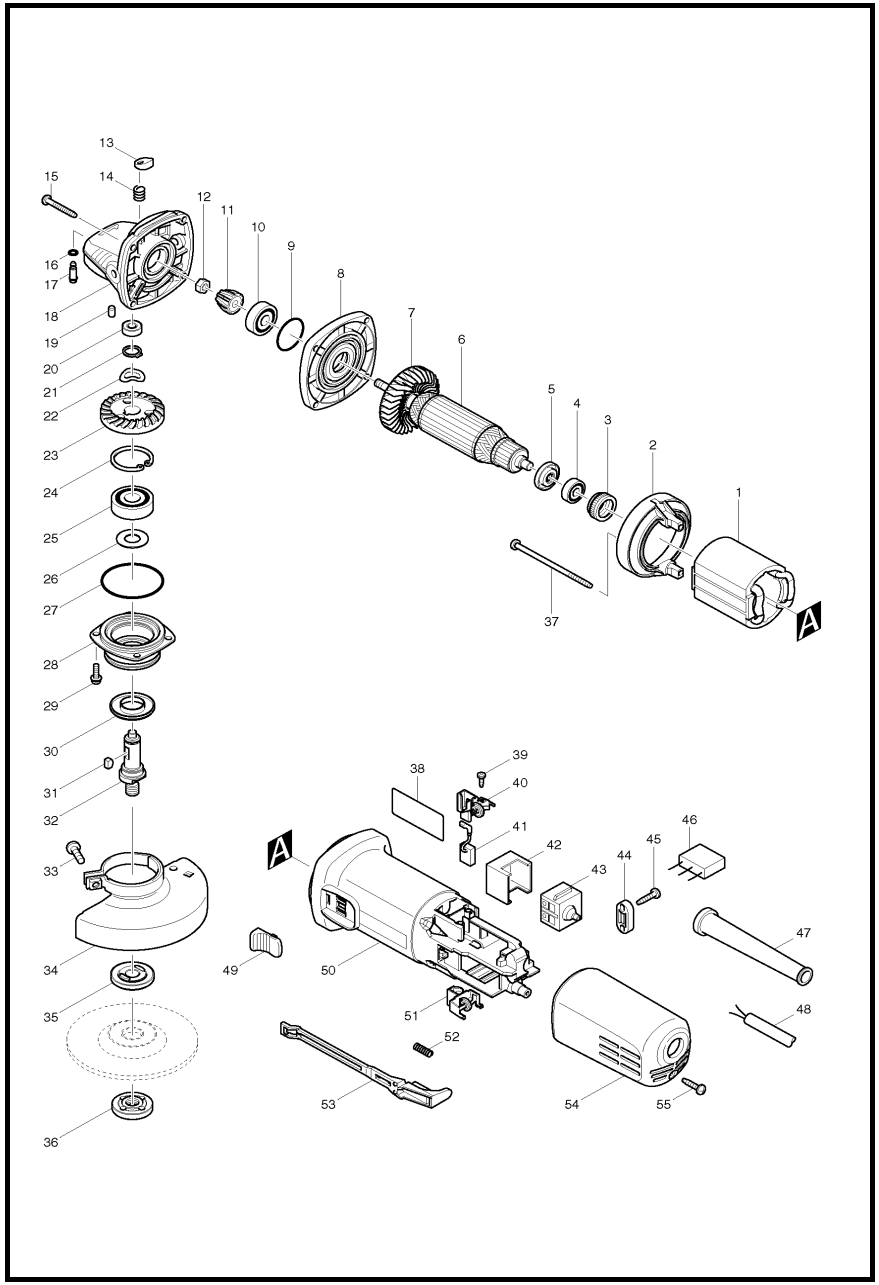

MODEL 9556NB

ITEM	PARTS ID	DESCRIPTION	PRICE/BAHT
001	621708-9	FIELD 220-240V	
002	418770-1	BAFFLE PLATE	120
003	421868-5	LABYRINTH RUBBER RING 19	100
004	211021-9	BALL BEARING 607LLB	240
005	681636-0	INSULATION WASHER	60
006	510084-5	ARMATURE ASS'Y 220-240V	
008	317821-6	GEAR HOUSING COVER	320
009	213445-5	O-RING 26	30
010	210042-8	BALL BEARING 629LLB	250
011	227464-5	SPIRAL BEVEL GEAR 10	320
012	252186-8	HEX. NUT M6	70
013	417771-6	PIN CAP	110
014	233376-2	COMPRESSION SPRING 8	70
015	266361-0	TAPPING SCREW 4X30	70
016	213960-9	O RING 5	100
017	256486-8	SHOULDER PIN 4	90
018	317814-3	GEAR HOUSING	510
019	263002-9	RUBBER PIN 4	30
020	210006-2	BALL BEARING 696ZZ	310
021	961052-5	RETAINING RING S-12	40
022	267794-2	WAVE WASHER 12	100
023	227505-7	SPIRAL BEVEL GEAR 37	370
024	962151-6	RETAINING RING R-32	90
025	211129-9	BALL BEARING 6201DDW	300
026	267238-2	FLAT WASHER 12	100
027	213622-9	O RING 45	110
028	317819-3	BEARING BOX	250
029	265099-4	PAN HEAD SCREW M4X14	70
030	345464-4	LABYRINTH RING	100
031	254011-9	WOODRUFF KEY 4	90
032	324488-3	SPINDLE	310
033	265103-9	PAN HEAD SCREW M5X14	100
034	125266-2	WHEEL COVER ASS'Y	230
035	224314-5	INNER FLANGE 30	330
036	224559-5	LOCK NUT 10-30	170
037	266345-8	TAPPING SCREW 4X80	70
039	266007-8	TAPPING SCREW BIND PT 3X10	30
040	643760-7	BRUSH HOLDER	260
041	195002-0	CARBON BRUSH SET CB-325/329	
042	418729-8	SPACER	110
043	651947-7	SWITCH 1247.0302	200
044	687053-2	STRAIN RELIEF	70
045	266326-2	TAPPING SCREW 4X18	30
047	682566-8	CORD GUARD 10	80
048	691015-4	POWER SUPPLY CORD 0.75-2-2.5	740
049	419566-3	SWITCH KNOB	100
050	418725-6	MOTOR HOUSING	620
051	643760-7	BRUSH HOLDER	260
052	233121-5	COMPRESSION SPRING 4	60
053	418728-0	SWITCH LEVER B	90
054	418726-4	REAR COVER	180
055	266326-2	TAPPING SCREW 4X18	30
056	892295-7	CLEAR LABEL	40

ITEM	PARTS ID	DESCRIPTION	PRICE/BAHT
A01	153489-2	GRIP 36 COMPLETE	180
A02	782420-7	LOCK NUT WRENCH 20	130
A03	D-05197	DIAMOND WHEEL 105MM(SEG,DRY)	810

SERVICE DRAWING

MODEL NO. 9558NB

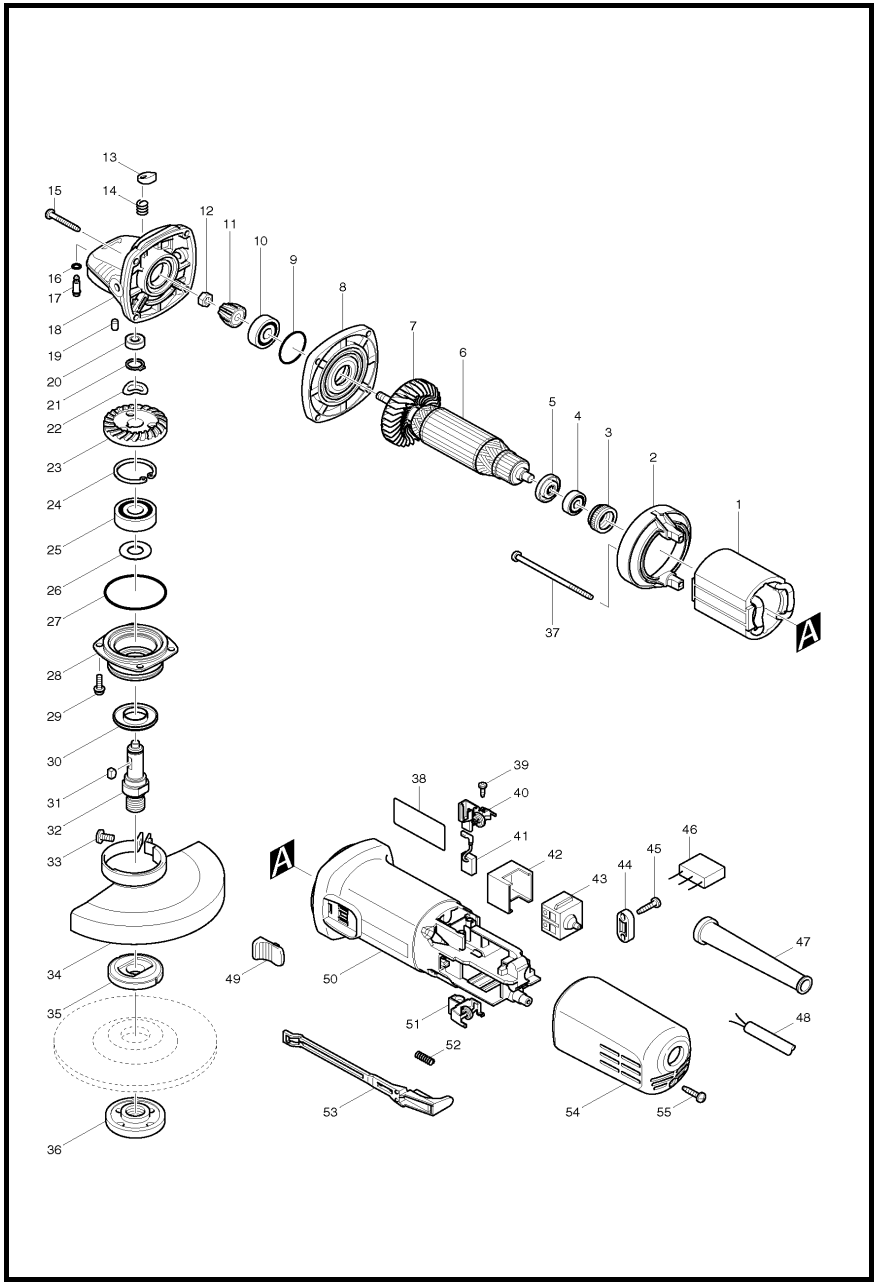

MODEL 9558NB

ITEM	PARTS ID	DESCRIPTION	PRICE/BAHT
001	621708-9	FIELD 220-240V	
002	418770-1	BAFFLE PLATE	120
003	421868-5	LABYRINTH RUBBER RING 19	100
004	211021-9	BALL BEARING 607LLB	240
005	681636-0	INSULATION WASHER	60
006	510084-5	ARMATURE ASS'Y 220-240V	
008	317821-6	GEAR HOUSING COVER	320
009	213445-5	O-RING 26	30
010	210042-8	BALL BEARING 629LLB	250
011	227464-5	SPIRAL BEVEL GEAR 10	320
012	252186-8	HEX. NUT M6	70
013	417771-6	PIN CAP	110
014	233376-2	COMPRESSION SPRING 8	70
015	266361-0	TAPPING SCREW 4X30	70
016	213960-9	O RING 5	100
017	256486-8	SHOULDER PIN 4	90
018	317814-3	GEAR HOUSING	510
019	263002-9	RUBBER PIN 4	30
020	210006-2	BALL BEARING 696ZZ	310
021	961052-5	RETAINING RING S-12	40
022	267794-2	WAVE WASHER 12	100
023	227505-7	SPIRAL BEVEL GEAR 37	370
024	962151-6	RETAINING RING R-32	90
025	211129-9	BALL BEARING 6201DDW	300
026	267238-2	FLAT WASHER 12	100
027	213622-9	O RING 45	110
028	317819-3	BEARING BOX	250
029	265099-4	PAN HEAD SCREW M4X14	70
030	345464-4	LABYRINTH RING	100
031	254011-9	WOODRUFF KEY 4	90
032	324489-1	SPINDLE	310
033	265103-9	PAN HEAD SCREW M5X14	100
034	125268-8	WHEEL COVER ASS'Y	330
035	224415-9	INNER FLANGE 42	200
036	224554-5	LOCK NUT 14-45	250
037	266345-8	TAPPING SCREW 4X80	70
039	266007-8	TAPPING SCREW BIND PT 3X10	30
040	643760-7	BRUSH HOLDER	260
042	418729-8	SPACER	110
043	651947-7	SWITCH 1247.0302	200
044	687053-2	STRAIN RELIEF	70
045	266326-2	TAPPING SCREW 4X18	30
047	682566-8	CORD GUARD 10	80
048	691015-4	POWER SUPPLY CORD 0.75-2-2.5	740
049	419566-3	SWITCH KNOB	100
050	418725-6	MOTOR HOUSING	620
051	643760-7	BRUSH HOLDER	260
052	233121-5	COMPRESSION SPRING 4	60
053	418728-0	SWITCH LEVER B	90
054	418726-4	REAR COVER	180
055	266326-2	TAPPING SCREW 4X18	30
A01	153489-2	GRIP 36 COMPLETE	180
A02	782423-1	LOCK NUT WRENCH 35	170

SERVICE DRAWING

MODEL NO. 9607NB

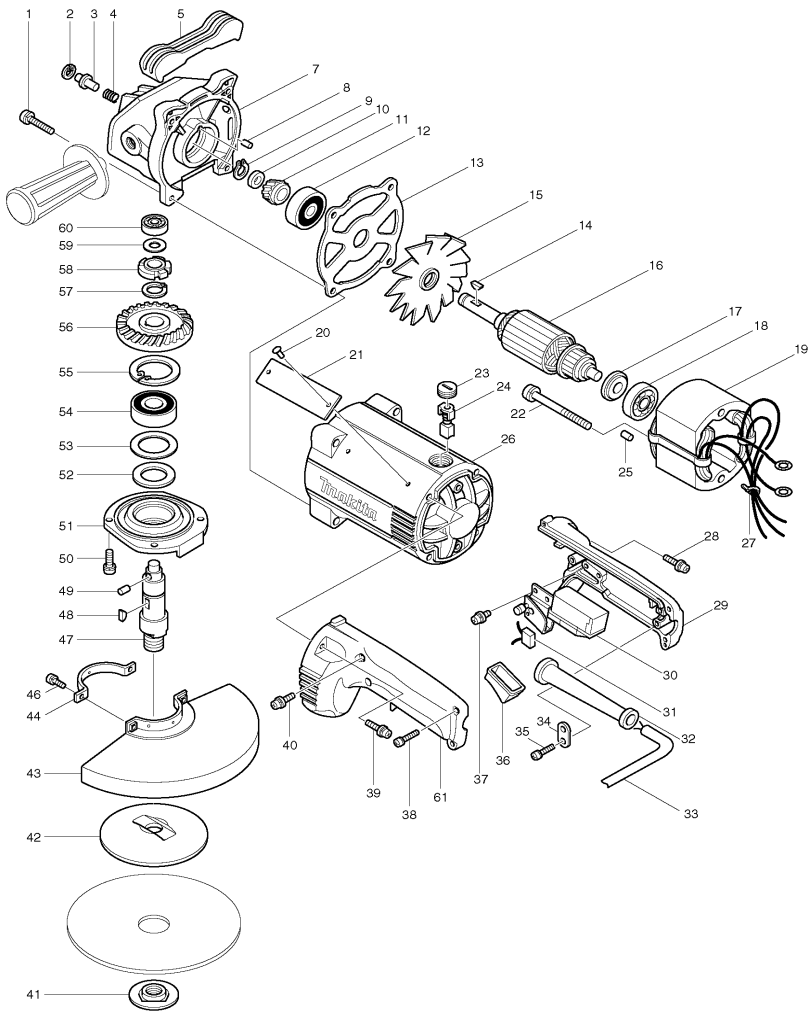

MODEL 9607NB

ITEM	PARTS ID	DESCRIPTION	PRICE/BAHT
001	911261-6	PAN HEAD SCREW M5X40	50
002	962062-5	RETAINING RING R-12	50
003	256615-3	PIN 6	90
004	231037-8	COMPRESSION SPRING 7	20
005	421156-0	TOOL REST	230
006	251835-4	CAP SCREW M12X12	
007	156451-6	GEAR HOUSING COMPLETE	2,930
008	263005-3	RUBBER PIN 6	30
009	961072-9	RETAINING RING S-12	50
011	221320-1	SPIRAL BEVEL GEAR 19	1,060
012	211111-8	BALL BEARING 6301LLB	550
013	341403-2	PLATE	400
014	254001-2	WOODRUFF KEY 4	80
016	514953-2	ARMATURE ASS'Y 220V	
017	681635-2	INSULATION WASHER	80
018	211087-9	BALL BEARING 6200DDW	380
019	524528-9	FIELD ASS'Y 220V	
020	953106-2	RIVET 0-5	20
022	911290-9	PAN HEAD SCREW M5X65	100
023	643650-4	BRUSH HOLDER CAP 6.5-13.5	70
025	263014-2	RUBBER PIN 4	40
026	156452-4	MOTOR HOUSING COMPLETE	2,010
027	687010-0	BAND	30
028	911248-8	PAN HEAD SCREW M5X28	50
029	181908-8	HANDLE SET	1,270
030	651128-3	SWITCH C3D-15AS	1,440
032	682505-8	CORD GUARD 10-90	150
033	691216-4	POWER SUPPLY CORD 1.25-2-2.5	950
034	687000-3	STRAIN RELIEF	40
035	911133-5	PAN HEAD SCREW M4X18	50
036	421279-4	DUST COVER F/AC/DC SWITCH	170
037	911113-1	PAN HEAD SCREW M4X10	30
038	911148-2	PAN HEAD SCREW M4X25	70
039	911248-8	PAN HEAD SCREW M5X28	50
040	911148-2	PAN HEAD SCREW M4X25	70
041	224521-0	LOCK NUT 16-40	300
042	224063-4	INNER FLANGE 100	1,220
043	164258-6	WHEEL COVER 180	940
044	342555-2	WHEEL COVER HOLDER	230
046	251259-4	+ PAN HEAD SCREW M5X16	80
047	325570-1	SPINDLE	1,680
048	254001-2	WOODRUFF KEY 4	80
049	256047-4	PIN 6	80
050	911226-8	PAN HEAD SCREW M5X18	30
051	315003-4	BEARING BOX	810
052	443036-0	FELT RING 25	50
053	253772-8	FLAT WASHER 28	100
054	211256-2	BALL BEARING 6203LLB	520
055	962157-4	RETAINING RING R-40	110
056	221321-9	SPIRAL BEVEL GEAR 58	2,540
057	961057-5	RETAINING RING S-17	40
058	322465-9	SPINDLE LOCK BUSH	390
059	253214-2	FLAT WASHER 9	80
060	211058-6	BALL BEARING 629LB	320
400	152492-0	GRIP 36 COMPLETE	230
402	782412-6	LOCK NUT WRENCH 28	230

SERVICE DRAWING

MODEL NO. 9617

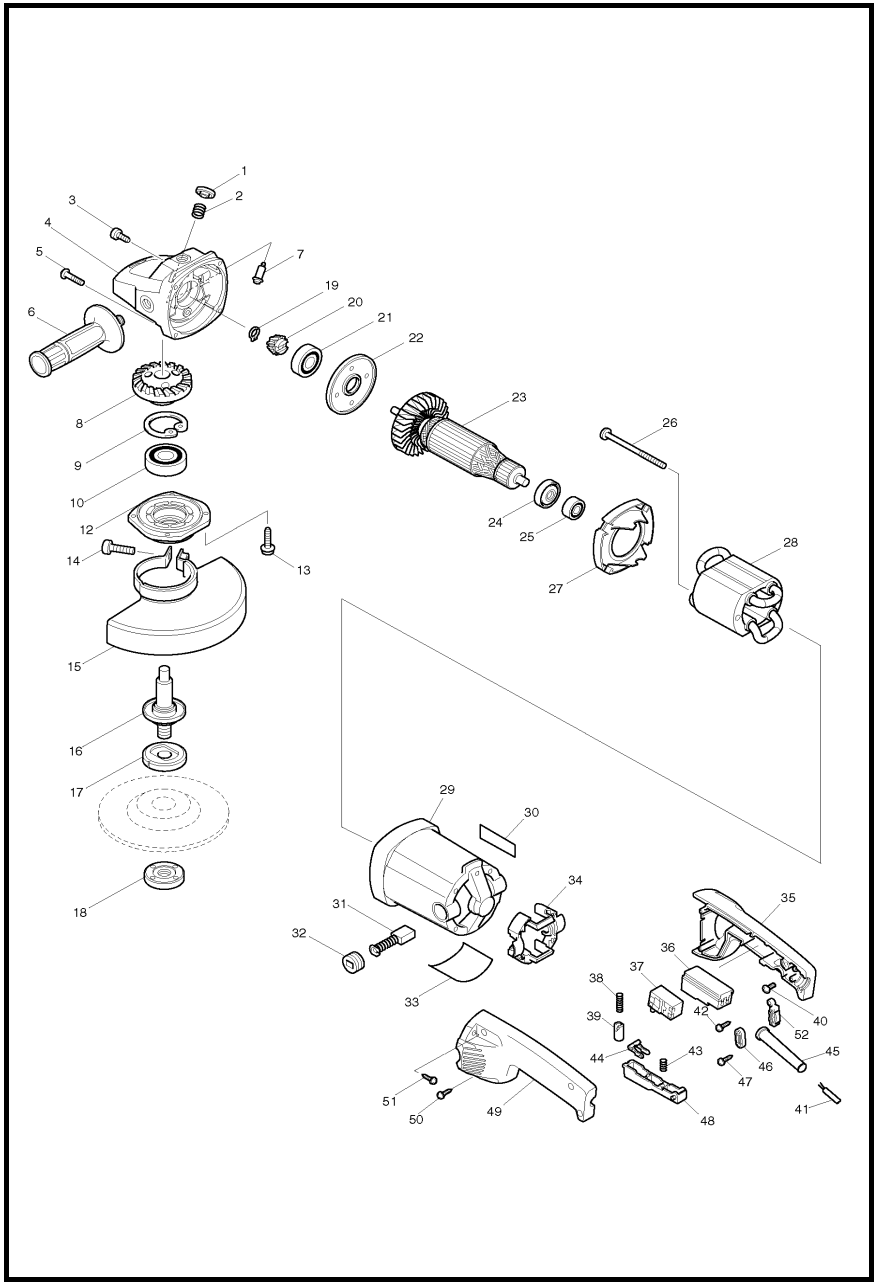

MODEL 9617

ITEM	PARTS ID	DESCRIPTION	PRICE/BAHT
001	416449-8	PIN CAP	100
002	233292-8	COMPRESSION SPRING 12	40
003	265976-0	HEX.SOCKET HEAD BOLT M5X10	80
004	151631-9	GEAR HOUSING COMPLETE	2,410
005	911251-9	PAN HEAD SCREW M5X30	50
006	152539-0	GRIP 36 COMPLETE	320
007	256452-5	PIN 8	170
008	226773-9	SPIRAL BEVEL GEAR 49	2,110
009	962157-4	RETAINING RING R-40	110
010	211278-2	BALL BEARING 6203DDW	530
012	317007-2	BEARING BOX	760
013	266086-6	HEX. SOCKET HEAD BOLT M5X16	80
014	265198-2	PAN HEAD SCREW M8X25	70
015	165215-7	WHEEL COVER	1,030
016	152606-1	SPINDLE COMPLETE	1,000
017	224415-9	INNER FLANGE 42	200
018	224543-0	LOCK NUT 14-45	260
019	961005-4	RETAINING RING S-9	30
020	226774-7	SPIRAL BEVEL GEAR 15	760
021	211132-0	BALL BEARING 6301DDW	530
022	285688-9	BEARING RETAINER 57	220
023	516793-4	ARMATURE ASS'Y 220-240V	
024	681630-2	INSULATION WASHER	150
025	211087-9	BALL BEARING 6200DDW	380
026	911290-9	PAN HEAD SCREW M5X65	100
027	416655-5	BAFFLE PLATE	450
028	526083-7	FIELD ASS'Y 220V	
029	153421-6	MOTOR HOUSING COMPLETE	5,330
031	B-80357	CARBON BRUSH SET CB-204A	
032	643700-5	BRUSH HOLDER CAP 7-18	110
034	416657-1	HOLDER	640
035	151637-7	HANDLE R COMPLETE	2,400
036	416658-9	SWITCH BOX	700
037	651922-3	SWITCH TG71B	850
038	233092-6	COMPRESSION SPRING 5	50
039	416659-7	LOCK-ON BUTTON	270
040	652014-1	PAN HEAD SCREW M4X8	30
041	691134-6	POWER SUPPLY CORD 0.75-3-2.5	1,010
042	266034-5	TAPPING SCREW CT 4X16	50
043	233039-0	COMPRESSION SPRING 7	80
044	344796-6	RECEIVER	200
045	682505-8	CORD GUARD 10-90	150
046	687053-2	STRAIN RELIEF	70
047	265995-6	TAPPING SCREW 4X18	40
048	416656-3	SWITCH LEVER	410
048	455478-6	SWITCH LEVER	670
049	317081-0	HANDLE L	2,080
050	266034-5	TAPPING SCREW CT 4X16	50
051	266036-1	TAPPING SCREW BIND CT 5X20	90
052	687100-9	STRAIN RELIEF	170
053	442124-0	GASKET	100
A01	782407-9	LOCK NUT WRENCH 35	320

SERVICE DRAWING

MODEL NO. 98202

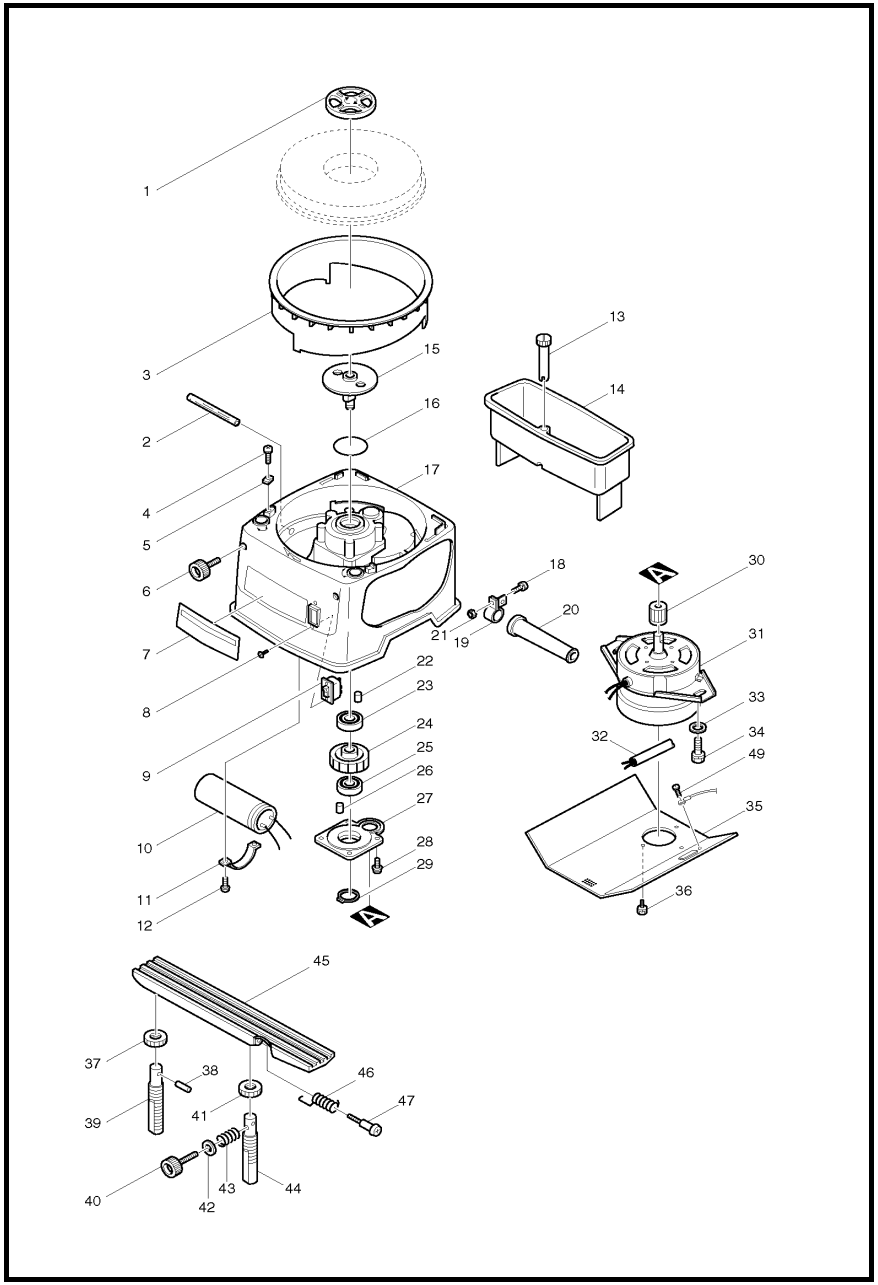

MODEL 98202

ITEM	PARTS ID	DESCRIPTION	PRICE/BAHT
001	271235-2	KNOB 65	250
002	412033-7	VINYL TUBE 8X10X100	50
003	411429-9	WHEEL COVER	510
004	911231-5	PAN HEAD SCREW M5X20	50
005	341392-1	SET PLATE	50
006	251847-7	SCREW M6X31	120
007	854233-7	NAME PLATE 98202	
008	912002-3	COUNTERSUNK HEAD SCREW M3X6	30
009	651502-5	SWITCH W115ADT-2	480
010	645315-4	CAPACITOR 220V(METALIZED FILM)	1,500
011	687629-5	CAPACITOR CLAMP	80
012	911231-5	PAN HEAD SCREW M5X20	50
013	271405-3	THUMB PIPE 20	170
014	411431-2	TANK	690
015	314087-9	SPINDLE	2,280
016	213504-5	O RING 40	80
017	151274-7	FRAME COMPLETE	4,820
018	911141-6	PAN HEAD SCREW M4X22	20
019	687015-0	STRAIN RELIEF	120
020	682504-0	CORD GUARD 10-85	190
021	931102-0	HEX. NUT M4	50
022	263002-9	RUBBER PIN 4	30
023	211206-7	BALL BEARING 6202LLB	460
024	221643-7	HELICAL GEAR 38	380
025	211106-1	BALL BEARING 6201LLB	400
026	263002-9	RUBBER PIN 4	30
027	152205-9	GEAR COVER COMPLETE	340
028	911249-6	PAN HEAD SCREW M5X28	80
029	961052-5	RETAINING RING S-12	40
030	221642-9	HELICAL GEAR 12	290
031	629646-9	MOTOR 220V	7,940
032	691134-6	POWER SUPPLY CORD 0.75-3-2.5	1,010
033	941251-5	FLAT WASHER 10	30
034	921551-9	HEX. BOLT M10X30	150
035	344030-4	UNDER COVER	750
036	911103-4	PAN HEAD SCREW M4X6	30
037	252619-3	WING NUT M16	100
038	256712-5	PIN 6	80
039	325540-0	SUB POLE	1,160
040	251817-6	SCREW M6X41	100
041	252619-3	WING NUT M16	100
042	941151-9	FLAT WASHER 6	30
043	231255-8	COMPRESSION SPRING 7	80
044	325539-5	MAIN POLE	1,330
045	311419-1	RAIL	3,090
046	231529-7	TORSION SPRING 8	150
047	251271-4	+ PAN HEAD SCREW M6	120
048	267040-3	FLAT WASHER 10	
049	652014-1	PAN HEAD SCREW M4X8	30
050	931102-0	HEX. NUT M4	50
404	341391-3	WRENCH	150

SERVICE DRAWING

MODEL NO. 9910

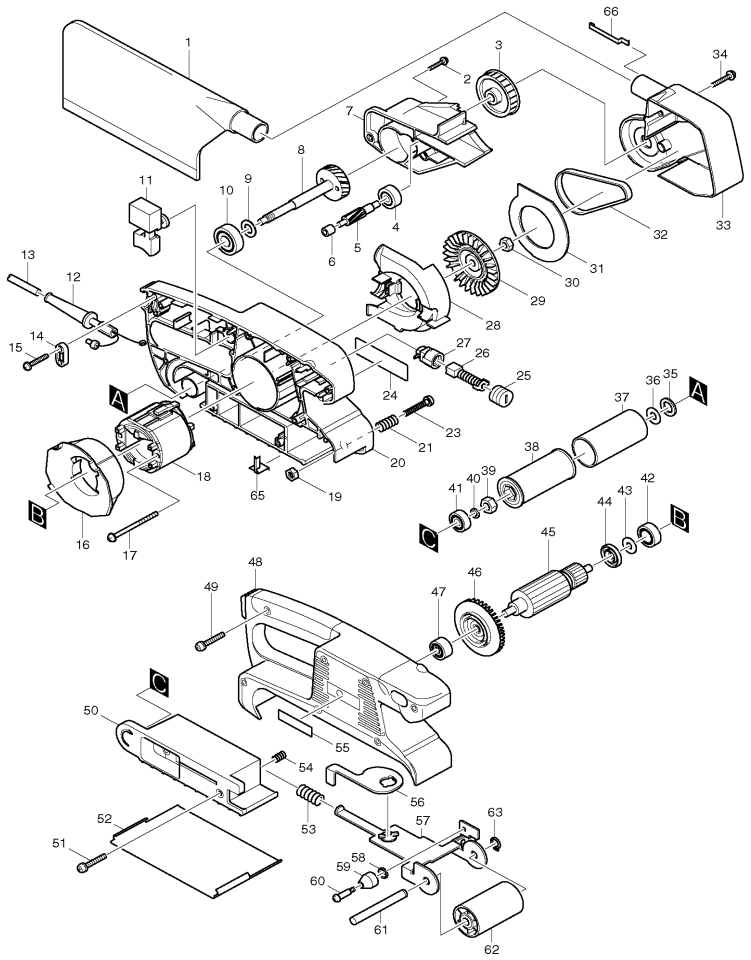

MODEL 9910

ITEM	PARTS ID	DESCRIPTION	PRICE/BAHT
001	122548-3	DUST BAG ASS'Y	640
002	265999-8	TAPPING SCREW 4X25	30
003	222144-8	PULLEY 8.5-45.1	670
004	210005-4	BALL BEARING 608DDW	240
005	226494-3	HELICAL GEAR 6	520
006	212009-2	NEEDLE BEARING 509	230
007	416420-2	BRACKET	370
008	153252-3	HELICAL GEAR 31 COMPLETE	860
009	253758-2	FLAT WASHER 10	40
010	211088-7	BALL BEARING 6000DDW	300
011	651285-7	SWITCH	460
012	682504-0	CORD GUARD 10-85	190
013	691015-4	POWER SUPPLY CORD 0.75-2-2.5	740
014	687053-2	STRAIN RELIEF	70
015	265995-6	TAPPING SCREW 4X18	40
016	416418-9	BAFFLE PLATE	150
017	266052-3	TAPPING SCREW 4X60	100
018	633393-6	FIELD 220-240V	
019	931202-6	HEX. NUT M5	70
020	150958-4	HOUSING L COMPLETE	1,690
021	233219-8	COMPRESSION SPRING 6	30
023	911252-7	PAN HEAD SCREW M5X30	50
024	859229-3	NAME PLATE 9910	80
025	643550-8	BRUSH HOLDER CAP 5-8	100
026	B-80391	CARBON BRUSH SET CB-411A	
027	643922-7	BRUSH HOLDER	190
028	416416-3	SCROLL PLATE	190
029	241660-1	FAN 68	730
030	252153-3	HEX. NUT M6-10	70
031	344584-1	PLATE	100
032	225079-2	SYNCHRO BELT 6-300	290
033	416415-5	BELT COVER	460
034	265999-8	TAPPING SCREW 4X25	30
035	267177-6	FLAT WASHER 12	100
036	253865-1	FLAT WASHER 8	90
037	422032-1	RUBBER SLEEVE 29	120
038	316971-4	DRIVING ROLLER	470
039	252154-1	HEX. NUT M8-13	80
040	253077-6	FLAT WASHER 6	30
041	210022-4	BALL BEARING 626DDW	280
042	210023-2	BALL BEARING 627DDW	210
043	253823-7	FLAT WASHER 7	60
044	681658-0	INSULATION WASHER	180
045	517243-2	ARMATURE ASS'Y 220-240V	
047	211021-9	BALL BEARING 607LLB	240
048	182981-1	HOUSING R	1,230
049	265999-8	TAPPING SCREW 4X25	30
050	416419-7	SHOE	400
051	265999-8	TAPPING SCREW 4X25	30
052	345503-0	STEEL PLATE	400
053	233221-1	COMPRESSION SPRING 12	50
054	231038-6	COMPRESSION SPRING 6	50
055	819063-3	MAKITA LABEL	30

ITEM	PARTS ID	DESCRIPTION	PRICE/BAHT
056	344585-9	LEVER	210
057	150837-6	TENSION ROLLER ARM COMPLETE	690
058	267731-6	CUP WASHER 4	80
059	416417-1	ROLLER	120
060	265059-6	SHOULDER SCREW M4	100
061	323776-5	TENSION ROLLER SHAFT	250
062	152585-3	TENSION ROLLER COMPLETE	400
063	961004-6	RETAINING RING S-8	20
065	344703-9	EARTH SUPPORTER	120
066	344701-3	EARTH PLATE	80
A01	794551-0	ABRASIVE BELT 76X457 WA80	1,980

SERVICE DRAWING

MODEL NO. 9924DB

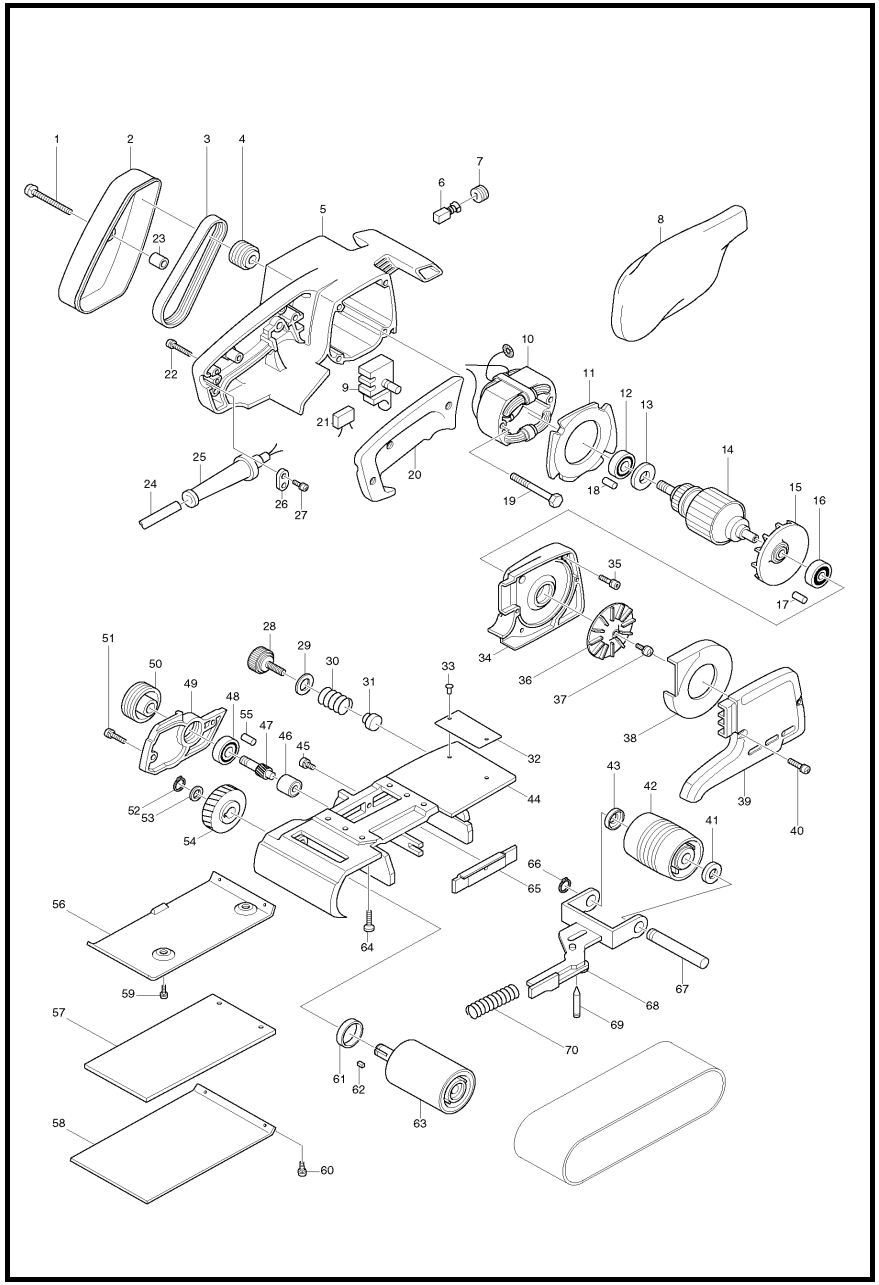

MODEL 9924DB

ITEM	PARTS ID	DESCRIPTION	PRICE/BAHT
001	911261-6	PAN HEAD SCREW M5X40	50
002	343270-1	BELT COVER	390
003	225008-5	POLY V-BELT 5-304	760
004	222010-9	V-PULLEY 5-25L	320
005	156490-6	MOTOR HOUSING COMPLETE	2,280
006	B-80298	CARBON BRUSH SET CB-100A	
007	643600-9	BRUSH HOLDER CAP 6-10	70
008	122296-4	DUST BAG ASS'Y	930
009	651204-3	SWITCH SGEL115CDY	420
010	523125-8	FIELD ASS'Y 220V	
011	411322-7	BAFFLE PLATE	170
012	211066-7	BALL BEARING 6200LLB	410
013	681623-9	INSULATION WASHER	80
014	513294-3	ARMATURE ASS'Y 220V	
016	211087-9	BALL BEARING 6200DDW	380
017	263002-9	RUBBER PIN 4	30
018	263002-9	RUBBER PIN 4	30
019	911270-5	PAN HEAD SCREW M5X45	80
020	411321-9	HANDLE COVER	430
022	911158-9	PAN HEAD SCREW M4X30	30
023	257504-5	SLEEVE 6	80
024	691025-1	POWER SUPPLY CORD 0.75-2-5.0	1,070
025	682504-0	CORD GUARD 10-85	190
026	687001-1	STRAIN RELIEF	50
027	911133-5	PAN HEAD SCREW M4X18	50
028	251815-0	SCREW M6X25	130
029	253707-9	FLAT WASHER 16	80
030	231225-7	COMPRESSION SPRING 16	80
031	411594-4	SHOE	80
033	953106-2	RIVET 0-5	20
034	312810-6	DUST COLLECTOR BRACKET	1,030
035	911241-2	PAN HEAD SCREW M5X25	110
036	241611-4	FAN 74	360
037	911211-1	PAN HEAD SCREW M5X12	30
038	343271-9	SEPARATOR	320
039	312809-1	DUST COLLECTOR COVER	670
040	911131-9	PAN HEAD SCREW M4X18	20
041	253922-5	CUP WASHER 12	110
042	152104-5	TENSION ROLLER COMPLETE	1,310
043	253922-5	CUP WASHER 12	110
044	151189-8	FRAME COMPLETE	5,080
045	911211-1	PAN HEAD SCREW M5X12	30
046	212003-4	NEEDLE BEARING 810	290
047	221193-2	HELICAL GEAR 10	800
048	211066-7	BALL BEARING 6200LLB	410
050	222011-7	V-PULLEY 5-45	880
051	911131-9	PAN HEAD SCREW M4X18	20
052	961052-5	RETAINING RING S-12	40
053	253312-2	THIN WASHER 12	50
054	221070-8	HELICAL GEAR 48	960
055	263002-9	RUBBER PIN 4	30
056	341647-4	BASE PLATE	390
057	423035-8	CORK RUBBER PLATE	320

ITEM	PARTS ID	DESCRIPTION	PRICE/BAHT
058	423036-6	CARBON PLATE 98MM	210
059	911111-5	PAN HEAD SCREW M4X10	30
060	911114-9	PAN HEAD SCREW M4X10	30
061	253922-5	CUP WASHER 12	110
062	254202-2	KEY 4	90
063	151113-1	DRIVING ROLLER COMPLETE	2,510
064	912227-9	COUNTERSUNK HEAD SCREW M5X´	50
065	155326-6	EDGE SLIDER	250
066	961052-5	RETAINING RING S-12	40
067	325458-5	TENSION ROLLER SHAFT	400
068	163104-0	TENSION ROLLER ARM	950
069	323634-5	SUPPORT PIN	160
070	231033-6	COMPRESSION SPRING 11	100
400	423036-6	CARBON PLATE 98MM	210

SERVICE DRAWING

MODEL NO. AN560

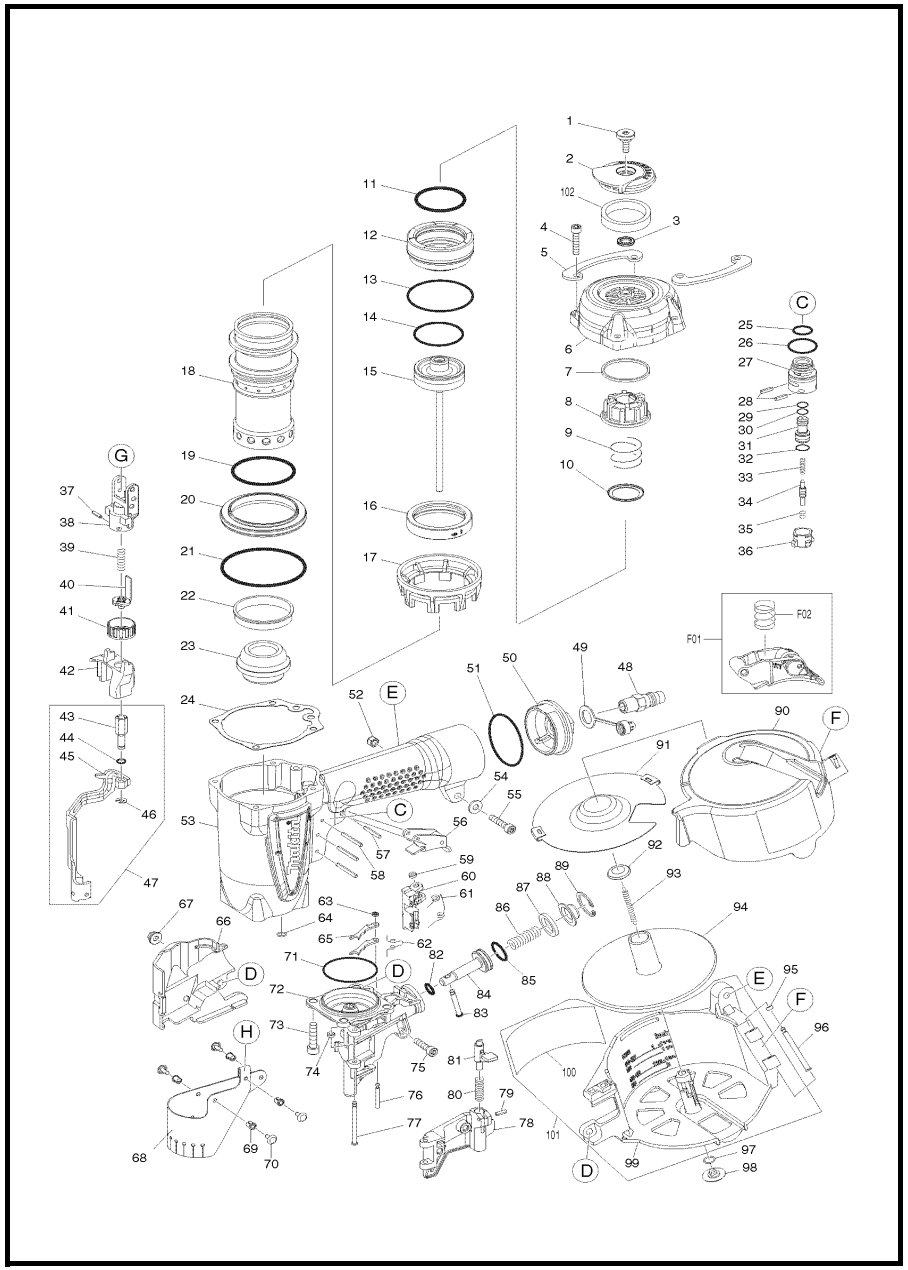

MODEL AN560

ITEM	PARTS ID	DESCRIPTION	PRICE/BAHT
001	BA00000001	HEX SOCKET HEAD BOLT (M5X13)	170
002	BA00000003	EXHAUST COVER	170
003	BA00000005	RUBBER PAD	30
004	BA00000007	HEX SOCKET HEAD BOLT M5X25	70
005	BA00000002	REAR HOUSING GUARD	110
006	BA00000172	TOP CAP COMPLETE	2,040
007	BA00000008	FLAT WASHER 37	210
008	BA00000014	REAR CUSHION	510
009	BA00000173	COMPRESSION SPRING 23	
010	BA00000013	CAP WASHER 23	150
011	BA00000011	O-RING 42	80
012	BA00000171	HEAD VALVE	1,150
013	BA00000012	O-RING 53	90
014	BA00000017	O-RING 38	230
015	BA00000018	DRIVER COMPLETE	4,980
016	BA00000015	VALVE SEAT	230
017	BA00000025	COLLAR	330
018	BA00000168	CYLINDER	2,870
019	BA00000020	O-RING	130
020	BA00000169	CYLINDER SEPARATOR	610
021	BA00000022	O-RING 60	90
022	BA00000023	SHEET RING	90
023	BA00000024	CUSHION F	570
024	BA00000016	TOP CAP GASKET	490
025	BA00000026	O-RING	30
026	BA00000028	O-RING	30
027	BA00000027	PLUNGER CAP	160
028	BA00000036	SPRING PIN	30
029	BA00000030	O-RING	30
030	BA00000030	O-RING	30
031	BA00000029	VALVE PLUNGER	250
032	BA00000031	O-RING	30
033	BA00000032	SPRING	30
034	BA00000033	PLUNGER	50
035	BA00000034	O-RING	30
036	BA00000035	TRIGGER VALVE HEAD	80
037	BA00000074	SPRING PIN	30
038	BA00000073	HOLDER	150
039	BA00000075	COMPRESSION SPRING 6	50
040	BA00000076	STOPPER	330
041	BA00000077	ADJUST AXLE	90
042	BA00000078	ADJUSTER GUIDE COMPLETE	150
043	BA00000080	ADJUSTER ROD	350
044	BA00000081	O-RING	30
046	BA00000083	E-RING	30
047	BA00000255	CONTACT ARM ASSY	1,150
048	BA00000045	AIR PLUG	210
048	BA00000254	CONTACT ARM	850
049	BA00000044	DUSTY COVER	70
050	BA00000042	INLET CAP (PT1/4"-19)	530
051	BA00000043	O-RING 43	70
052	BA00000095	HEX LOCK NUT M5	30
053	BA00000170	HOUSING COMPLETE	7,570

ITEM	PARTS ID	DESCRIPTION	PRICE/BAHT
054	BA00000093	FLAT WASHER 5	70
055	BA00000092	HEX SOCKET HEAD BOLT (M5X25)	50
056	BA00000039	TRIGGER UNIT	300
057	BA00000037	SPRING PIN	30
058	BA00000038	SPRING PIN	30
060	BA00000056	FEEDING CLAW	630
061	BA00000057	TORSION SPRING 5	70
062	BA00000061	TORSION SPRING 3	70
063	BA00000060	URETHANE RETAINER	70
064	BA00000051	O-RING 6	30
065	BA00000059	CHECK CLAW	120
066	BA00000071	CONTACT ARM COVER	160
067	BA00000072	HEX LOCK NUT M5	50
068	BA00000096	COVER	610
069	BA00000098	FIXED GUIDE	30
069	BA00000058	URETHANE RING 3	80
070	BA00000097	FIXED PIN	30
071	BA00000047	O-RING 47	90
072	BA00000256	DRIVER GUIDE	9,740
073	BA00000070	HEX SOCKET HEAD BOLT (M5X25)	80
074	BA00000058	URETHANE RING 3	80
075	BA00000069	HEX SOCKET HEAD BOLT (M5X22)	50
076	BA00000063	PIN 3	80
077	BA00000064	PIN 4	190
078	BA00000065	DOOR	1,690
079	BA00000068	SPRING PIN 3-10	150
080	BA00000066	COMPRESSION SPRING 6	50
081	BA00000067	LOCK LEVER	510
082	BA00000049	O-RING 9	30
083	BA00000062	PIN 4	210
084	BA00000048	PISTON	770
085	BA00000050	O-RING 18	50
086	BA00000052	COMPRESSION SPRING 9	70
087	BA00000053	RUBBER RING 17	140
088	BA00000054	CUP WASHER 5	130
089	BA00000055	RETAINING RING R-24	50
090	BA00000084	MAGAZINE CAP COMPLETE	530
091	BA00000099	PLATE	770
092	BA00000085	HOLDER CAP A	80
093	BA00000086	TENSION SPRING 4	110
094	BA00000087	CHANGE PLATE	550
095	BA00000091	URETHANE RING 2	50
096	BA00000064	PIN 4	190
097	BA00000094	O-RING 8	50
098	BA00000090	HOLDER CAP B	70
099	BA00000089	MAGAZINE	770
101	BA00000390	MAGAZINE COMPLETE	820
102	BA00000104	FILTER	160
A01	BA00000040	TRIGGER UNIT	720
C01	BA00000103	CARTON	950
F01	BA00000174	SEQUENTIAL TRIGGER SET	730
F02	BA00000102	SPRING	30

SERVICE DRAWING

MODEL NO. AN760

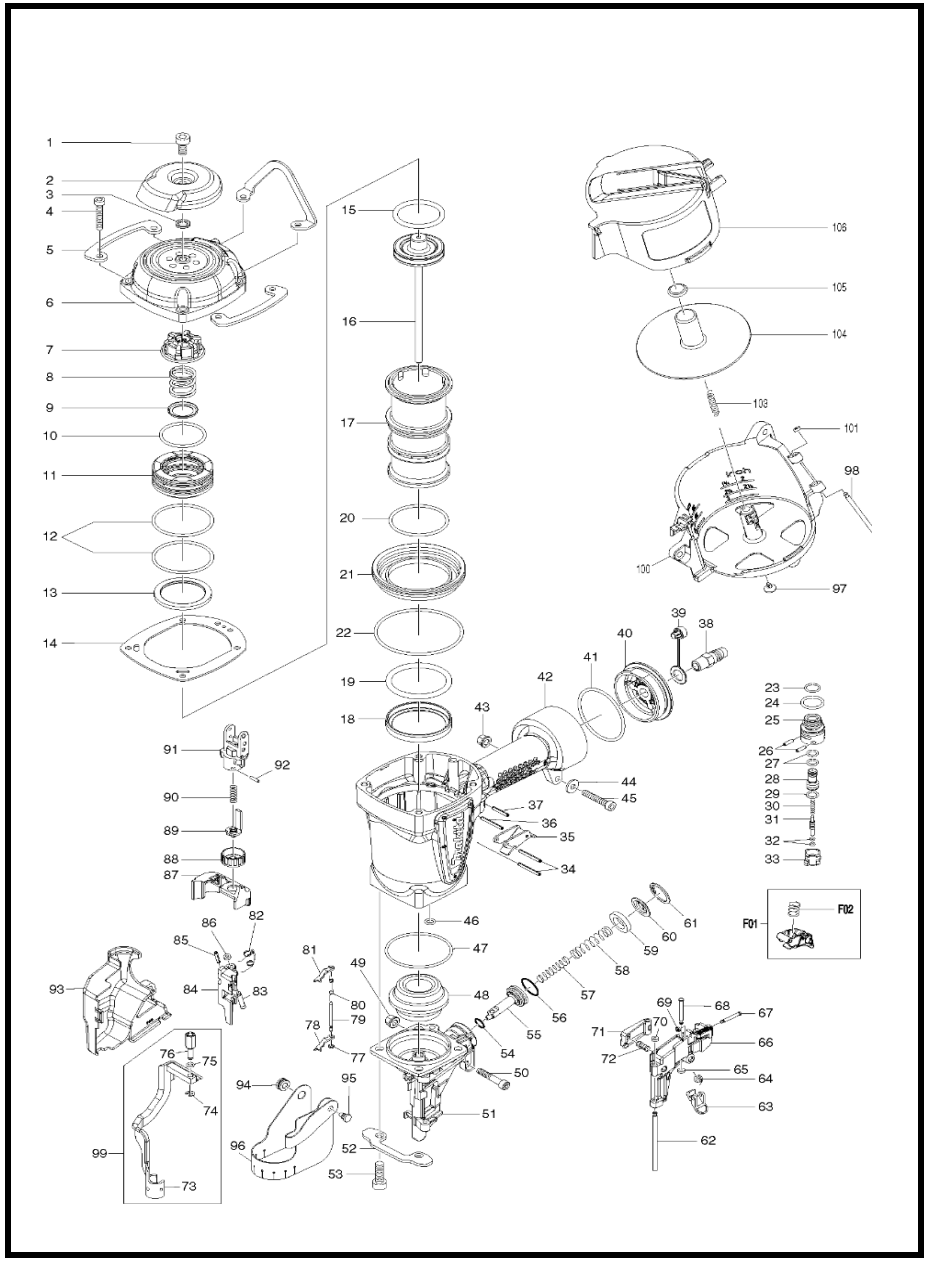

MODEL AN760

ITEM	PARTS ID	DESCRIPTION	PRICE/BAHT	ITEM	PARTS ID	DESCRIPTION	PRICE/BAHT
001	BA00000263	HEX.SOC.HD.BOLT	80	054	BA00000293	O-RING	50
002	BA00000264	DEFLECTOR	680	055	BA00000294	PISTON	1,340
003	BA00000005	RUBBER PAD	30	056	BA00000295	O-RING	50
004	BA00000265	HEX.SOC.HD.BOLT	80	057	BA00000297	COMPRESSION SPRING 8	50
005	BA00000284	REAR HOUSING GUARD	190	058	BA00000296	PUSHER-SPRING	70
006	BA00000266	TOP CAP COMPLETE	2,620	059	BA00000298	FEED BUMPER	90
007	BA00000267	REAR CUSHION	440	060	BA00000299	FEED PISTON CAP	110
008	BA00000268	COMPRESSION SPRING 21	120	061	BA00000300	C-RING	50
009	BA00000269	CAP WASHER	150	062	BA00000309	DOOR SHAFT PIN	150
010	BA00000271	O-RING 42	80	063	BA00000301	DOOR LATCH	390
011	BA00000282	HEAD VALVE	1,690	064	BA00000302	TORSION SPRING 6	30
012	BA00000272	O-RING 57	90	065	BA00000306	PU RETAINER	70
013	BA00000270	CYLINDER SEAL	170	066	BA00000303	DOOR	2,750
014	BA00000273	CYLINDER CAP SEAL	640	067	BA00000304	PIN	170
015	BA00000274	O-RING 43	110	068	BA00000305	PIN NAIL STOP	170
016	BA00000275	DRIVER COMPLETE	5,780	069	BA00000060	URETHANE RETAINER	70
017	BA00000276	CYLINDER	2,430	070	BA00000306	PU RETAINER	70
018	BA00000283	SHEET RING	510	071	BA00000308	NAIL HOLDER	570
019	BA00000277	O-RING 56	130	072	BA00000307	COMPRESSION SPRING 5	30
020	BA00000278	O-RING 55	80	073	BA00000311	CONTACT ARM	1,210
021	BA00000279	CYLINDER SEPARATOR	1,270	074	BA00000083	E-RING	30
022	BA00000280	O-RING	110	075	BA00000081	O-RING	30
023	BA00000026	O-RING	30	076	BA00000317	ADJUSTER ROD	250
024	BA00000028	O-RING	30	077	BA00000060	URETHANE RETAINER	70
025	BA00000027	PLUNGER CAP	160	078	BA00000333	NAIL STOP	110
026	BA00000036	SPRING PIN	30	079	BA00000335	PIN-NAIL STOP	170
027	BA00000030	O-RING	30	080	BA00000334	STOPPER FINGER SPRING	50
028	BA00000029	VALVE PLUNGER	250	081	BA00000333	NAIL STOP	110
029	BA00000031	O-RING	30	082	BA00000338	FEED FINGER SPRING	140
030	BA00000032	SPRING	30	083	BA00000337	PIN FEED PISTON	170
031	BA00000033	PLUNGER	50	084	BA00000336	FEEDING CLAW	1,200
032	BA00000034	O-RING	30	085	BA00000339	SPIRAL PINS	50
033	BA00000035	TRIGGER VALVE HEAD	80	086	BA00000306	PU RETAINER	70
034	BA00000038	SPRING PIN	30	087	BA00000316	SAFETY COVER	140
035	BA00000039	TRIGGER UNIT	300	088	BA00000077	ADJUST AXLE	90
036	BA00000038	SPRING PIN	30	089	BA00000481	STOPPER	340
037	BA00000037	SPRING PIN	30	090	BA00000479	COMPRESSION SPRING 7	70
038	BA00000045	AIR PLUG	210	091	BA00000313	SAFETY GUIDE	220
039	BA00000044	DUSTY COVER	70	092	BA00000074	SPRING PIN	30
040	BA00000287	END CAP PT1/4"-18	680	093	BA00000340	CONTACT ARM COVER	320
041	BA00000288	O-RING 49	80	094	BA00000342	PROTECTOR WASHER	140
042	BA00000286	GUN BODY UNIT	5,930	095	BA00000343	DUST SHIELD PLUG	90
043	BA00000250	BOLT CAP	50	096	BA00000341	COVER	230
044	BA00000245	FLAT WASHER	70	097	BA00000325	SPRING BASE	70
045	BA00000265	HEX.SOC.HD.BOLT	80	098	BA00000326	MAGAZINE SHAFT PIN	200
046	BA00000344	O-RING 7	30	099	BA00000310	CONTACT ARM ASSY	1,380
047	BA00000290	O-RING	90	100	BA00000321	CAUTION LABEL	50
048	BA00000281	FRONT CUSHION	800	100	BA00000322	CAUTION LABEL	50
049	BA00000250	BOLT CAP	50	100	BA00000323	CAUTION LABEL	50
050	BA00000289	HEX.SOC.HD.BOLT	80	100	BA00000324	CAUTION LABEL	50
051	BA00000291	DRIVER GUIDE	10,000	100	BA00000318	MAGAZINE COMPLETE	1,150
052	BA00000312	FRONT HOUSING GUARD	210	100	BA00000319	MAGAZINE COMPLETE	1,150
053	BA00000292	HEX.SOC.HD.BOLT	80	100	BA00000320	MAGAZINE COMPLETE	1,150

SERVICE DRAWING

MODEL NO. AN760

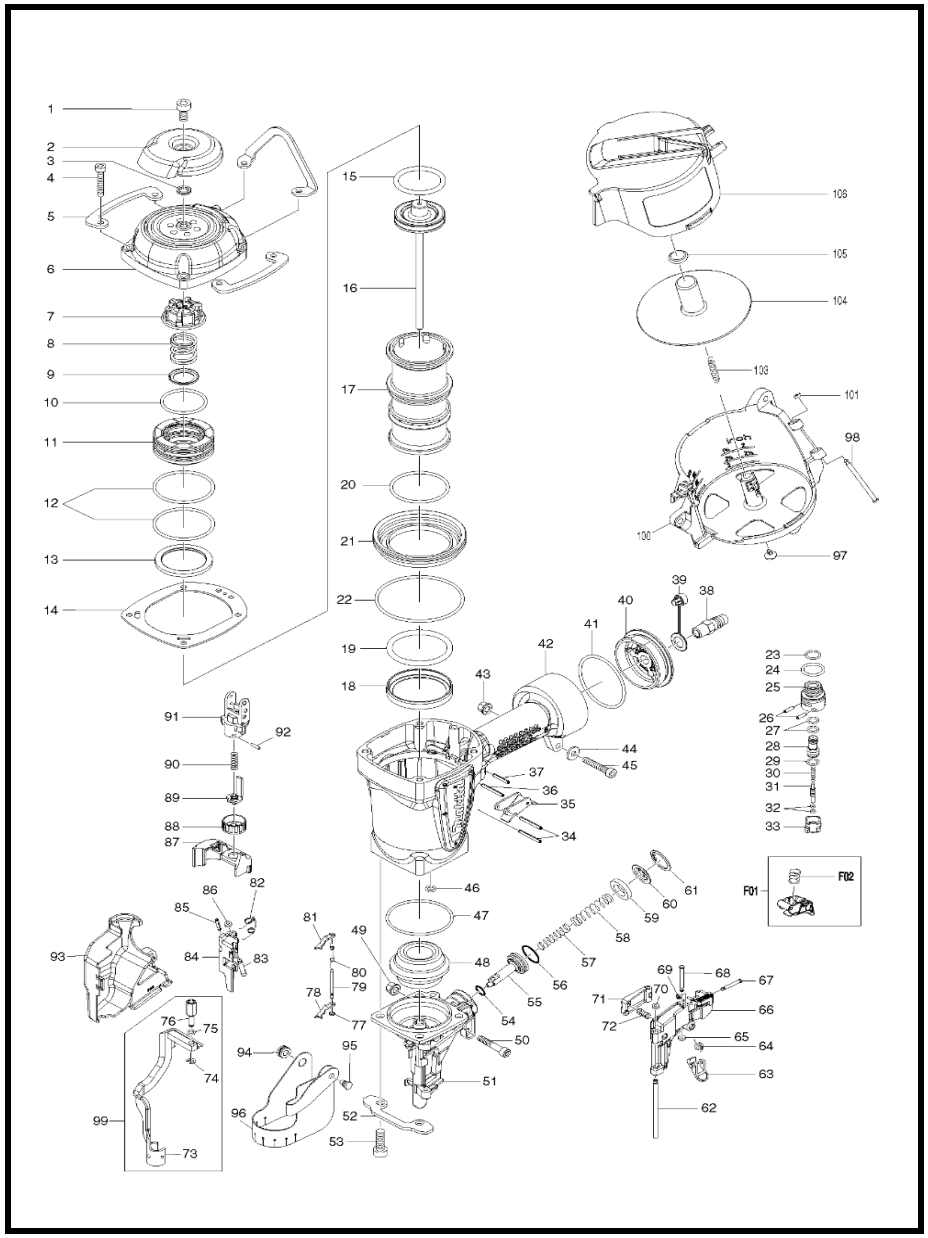

MODEL AN760

ITEM	PARTS ID	DESCRIPTION	PRICE/BAHT
101	BA00000306	PU RETAINER	70
103	BA00000327	TENSION SPRING 5 COMPLETE	110
104	BA00000328	CHANGE PLATE	640
105	BA00000329	SPRING BASE A	70
106	BA00000331	MAGAZINE CAP	610
106	BA00000330	MAGAZINE CAP COMPLETE	620
107	BA00000480	COMPRESSION SPRING 6	70
A01	BA00000285	HOOK	270
C01	BA00000345	CARTON	1,170
C01	BA00000346	CARTON	1,190
F01	BA00000174	SEQUENTIAL TRIGGER SET	730
F02	BA00000102	SPRING	30
F03	BA00000348	REPAIR KIT FOR HEAD VALVE	170
F04	BA00000349	REPAIR KIT FOR TRIGGER	110
F05	BA00000350	REPAIR KIT FOR PISTON	80
F06	BA00000351	REPAIR KIT FOR WEARING ITEMS	980
.	BA00000004	HEX. SOCKET SET SCREW	30
.	BA00000209	PROTECTIVE CUSHION	350
.	BA00000210	PROTECTIVE CUSHION	350
.	BA00000040	TRIGGER UNIT	720

SERVICE DRAWING

MODEL NO. AN902

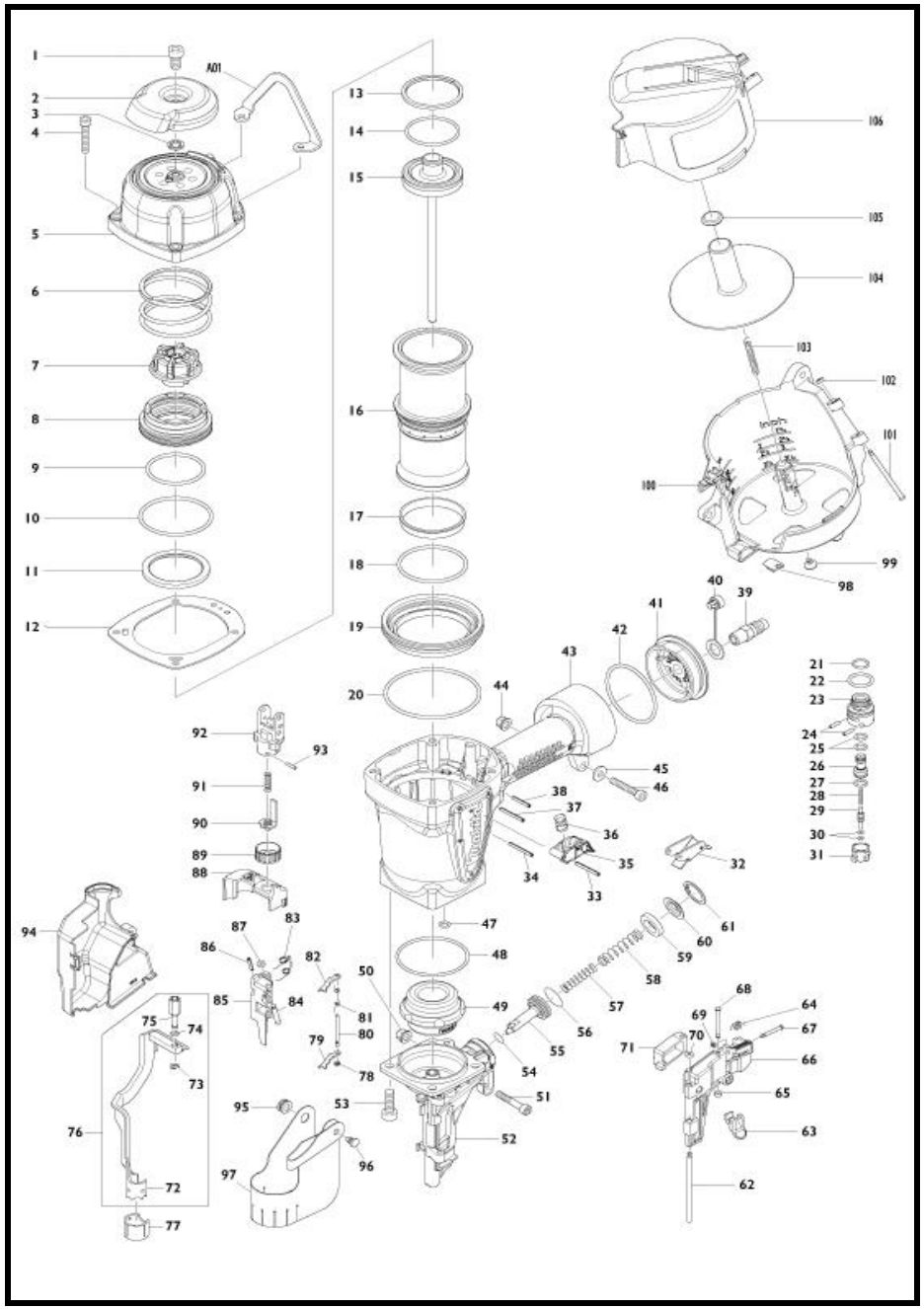

MODEL AN902

ITEM	PARTS ID	DESCRIPTION	PRICE/BAHT	ITEM	PARTS ID	DESCRIPTION	PRICE/BAHT
001	BA00000263	HEX.SOC.HD.BOLT	80	054	BA00000293	O-RING	50
002	BA00000264	DEFLECTOR	680	055	BA00000368	FEED PISTON	1,300
003	BA00000005	RUBBER PAD	30	056	BA00000295	O-RING	50
004	BA00000265	HEX.SOC.HD.BOLT	80	057	BA00000369	PUSHER-SPRING A	50
005	BA00000352	CAP COMPLETE	2,410	058	BA00000296	PUSHER-SPRING	70
006	BA00000353	COMPRESSION SPRING	210	059	BA00000298	FEED BUMPER	90
007	BA00000354	SEAL	480	060	BA00000299	FEED PISTON CAP	110
008	BA00000355	HD VALVE PISTON	1,510	061	BA00000300	C-RING	50
009	BA00000356	O-RING 49.4*3.1	110	062	BA00000309	DOOR SHAFT PIN	150
010	BA00000290	O-RING	90	063	BA00000301	DOOR LATCH	390
011	BA00000357	COLLAR	180	064	BA00000370	LATCH SPRING	30
012	BA00000273	CYLINDER CAP SEAL	640	065	BA00000306	PU RETAINER	70
013	BA00000358	PISTON RING	420	066	BA00000371	DOOR	2,700
014	BA00000359	O-RING 45.7*2.62	90	067	BA00000304	PIN	170
015	BA00000360	DRIVER UNIT	6,370	068	BA00000305	PIN NAIL STOP	170
016	BA00000361	CYLINDER	3,140	069	BA00000060	URETHANE RETAINER	70
017	BA00000362	CYLINDER RING	110	070	BA00000306	PU RETAINER	70
018	BA00000363	O-RING 59.4*3.1	110	071	BA00000373	NAIL STOP	610
019	BA00000364	CYLINDER SPACER	1,060	072	BA00000375	SAFETY A	1,180
020	BA00000280	O-RING	110	073	BA00000083	E-RING	30
021	BA00000026	O-RING	30	074	BA00000081	O-RING	30
022	BA00000028	O-RING	30	075	BA00000317	ADJUSTER ROD	250
023	BA00000027	PLUNGER CAP	160	076	BA00000374	SAFETY A UNIT	1,360
024	BA00000036	SPRING PIN	30	077	BA00000372	PROTECTIVE CASING	120
025	BA00000030	O-RING	30	078	BA00000060	URETHANE RETAINER	70
026	BA00000029	VALVE PLUNGER	250	079	BA00000333	NAIL STOP	110
027	BA00000031	O-RING	30	080	BA00000335	PIN-NAIL STOP	170
028	BA00000032	SPRING	30	081	BA00000334	STOPPER FINGER SPRING	50
029	BA00000033	PLUNGER	50	082	BA00000333	NAIL STOP	110
030	BA00000034	O-RING	30	083	BA00000338	FEED FINGER SPRING	140
031	BA00000035	TRIGGER VALVE HEAD	80	084	BA00000337	PIN FEED PISTON	170
032	BA00000039	TRIGGER UNIT	300	085	BA00000384	FEED FINGER	1,120
033	BA00000038	SPRING PIN	30	086	BA00000339	SPIRAL PINS	50
034	BA00000038	SPRING PIN	30	087	BA00000306	PU RETAINER	70
035	BA00000040	TRIGGER UNIT	720	088	BA00000316	SAFETY COVER	140
036	BA00000102	SPRING	30	089	BA00000077	ADJUST AXLE	90
037	BA00000038	SPRING PIN	30	090	BA00000484	STOPPER	340
038	BA00000037	SPRING PIN	30	091	BA00000482	COMPRESSION SPRING 8	70
039	BA00000045	AIR PLUG	210	092	BA00000485	HOLDER	340
040	BA00000044	DUSTY COVER	70	093	BA00000074	SPRING PIN	30
41-1	BA00000393	END CAP PT1/4"-19	680	094	BA00000385	SPRING COVER	350
042	BA00000356	O-RING 49.4*3.1	110	095	BA00000342	PROTECTOR WASHER	140
043	BA00000286	GUN BODY UNIT	5,930	096	BA00000343	DUST SHIELD PLUG	90
044	BA00000250	BOLT CAP	50	097	BA00000386	MUZZLE PROTECTOR	320
045	BA00000245	FLAT WASHER	70	098	BA00000379	WASHER	120
046	BA00000265	HEX.SOC.HD.BOLT	80	099	BA00000325	SPRING BASE	70
047	BA00000387	O-RING 7.8*1.9	30	101	BA00000326	MAGAZINE SHAFT PIN	200
048	BA00000290	O-RING	90	102	BA00000306	PU RETAINER	70
049	BA00000388	BUMPER	970	103	BA00000380	PULL SPRING	110
050	BA00000250	BOLT CAP	50	104	BA00000381	SPACER	380
051	BA00000289	HEX.SOC.HD.BOLT	80	105	BA00000329	SPRING BASE A	70
052	BA00000367	NOSE PIECE	14,010	106	BA00000383	MAGAZINE COVER	450
053	BA00000292	HEX.SOC.HD.BOLT	80	107	BA00000483	COMPRESSION SPRING 7	70

SERVICE DRAWING

MODEL NO. BBX7600

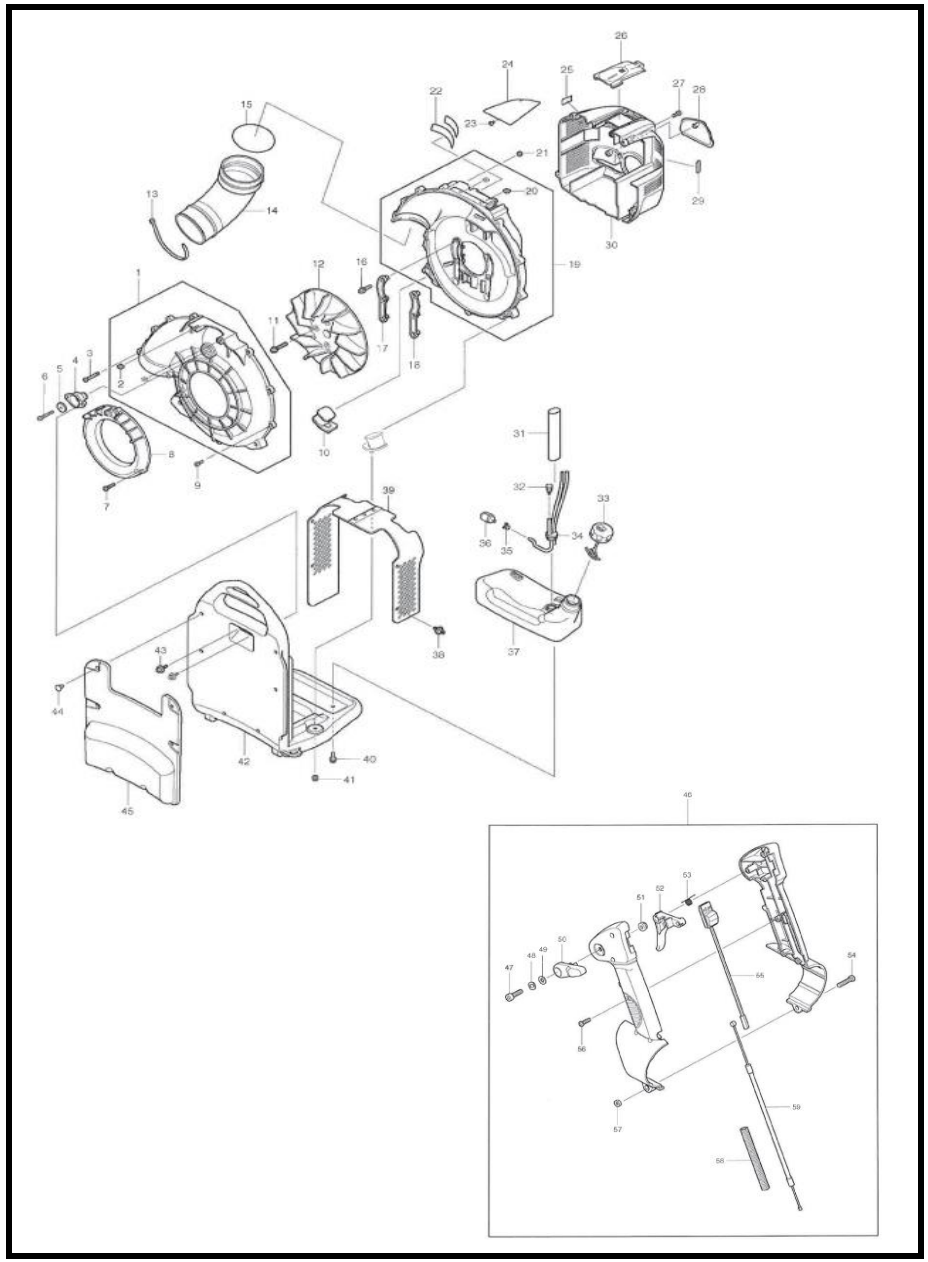

MODEL BBX7600

ITEM	PARTS ID	DESCRIPTION	PRICE/BAHT
001	6671007001	VOLUTE CASE 1 ASSY	2,170
002	6671005010	SQUARE NUT	110
003	0140059220	SCREW ASSY M5X65 (W.SW)	130
004	6671002000	DAMPER 1 COMPL	720
005	0200059910	WASHER M5	110
006	0043105400	PAN HEAD SCREW M5X40	90
007	0150059730	TAPPING SCREW 5X25	110
008	6671001000	INLET COVER COMPL	560
009	0150059800	TAPPING SCREW M5X18	100
010	6671003000	DAMPER 2 COMPL	640
011	0119069691	SOCKET HEAD BOLT M6X40 (W.SW)	130
012	240138-1	IMPELLER	1,800
013	0563379990	WIRE BAND	130
014	6671500400	ELBOW	440
015	213645-7	O RING 93	180
016	266649-8	SOCKET HEAD BOLT M6X30	90
017	6671500200	BASE 1	350
018	6671500300	BASE 2	350
019	6671008003	CASE 2 VOLUTE ASSY	2,970
020	6671005010	SQUARE NUT	110
021	931202-6	HEX. NUT M5	70
026	450964-2	PLUG COVER	180
027	0150059800	TAPPING SCREW M5X18	100
028	6676500100	OIL GUARD	270
029	898454-1	CHOKE LABEL	20
030	141521-4	ENGINE COVER COMPLETE	1,610
031	412119-7	TUBE GUARD 20-160	150
032	168396-6	BREATHER	370
033	125472-9	FUEL TANK CAP ASSEMBLY	410
034	0851339960	TUBE	570
035	345920-4	HOSE CLAMP	40
036	5806502900	FILTER	480
037	453618-0	FUEL TANK	1,450
038	6672500300	ROCK RIVET	160
039	6672002000	GUARD COMPL	540
040	0043706120	SCREW ASSY M6X12 (W.SW)	90
041	264092-5	FLANGE NUT M6	30
042	6672001000	FRAME COMPL	2,220
043	0140059210	SCREW ASSY M5X16 (W.SW)	110
044	6672500200	ROCK RIVET	150
045	6672003000	CUSHION COMPLETE	910
046	126137-6	CONTROL LEVER ASSEMBLY	
047	922317-0	HEX. SOCKET HEAD BOLT M6X14	40
048	267841-9	WAVE WASHER 7	110
049	267459-6	FLAT WASHER 7	80
050	453717-8	LEVER 2 THROTTLE	720
051	931302-2	HEX. NUT M6	70
052	453716-0	LEVER 1 THROTTLE	360
053	233602-9	TORSION SPRING 9	200
054	911242-0	PAN HEAD SCREW M5X25	40
055	168745-7	SWITCH COMPLETE	710
056	266768-0	TAPPING SCREW 4X16	120
057	931202-6	HEX. NUT M5	70
058	453715-2	TUBE CABLE	800
059	168744-9	CONTROL CABLE	710

SERVICE DRAWING

MODEL NO. BBX7600

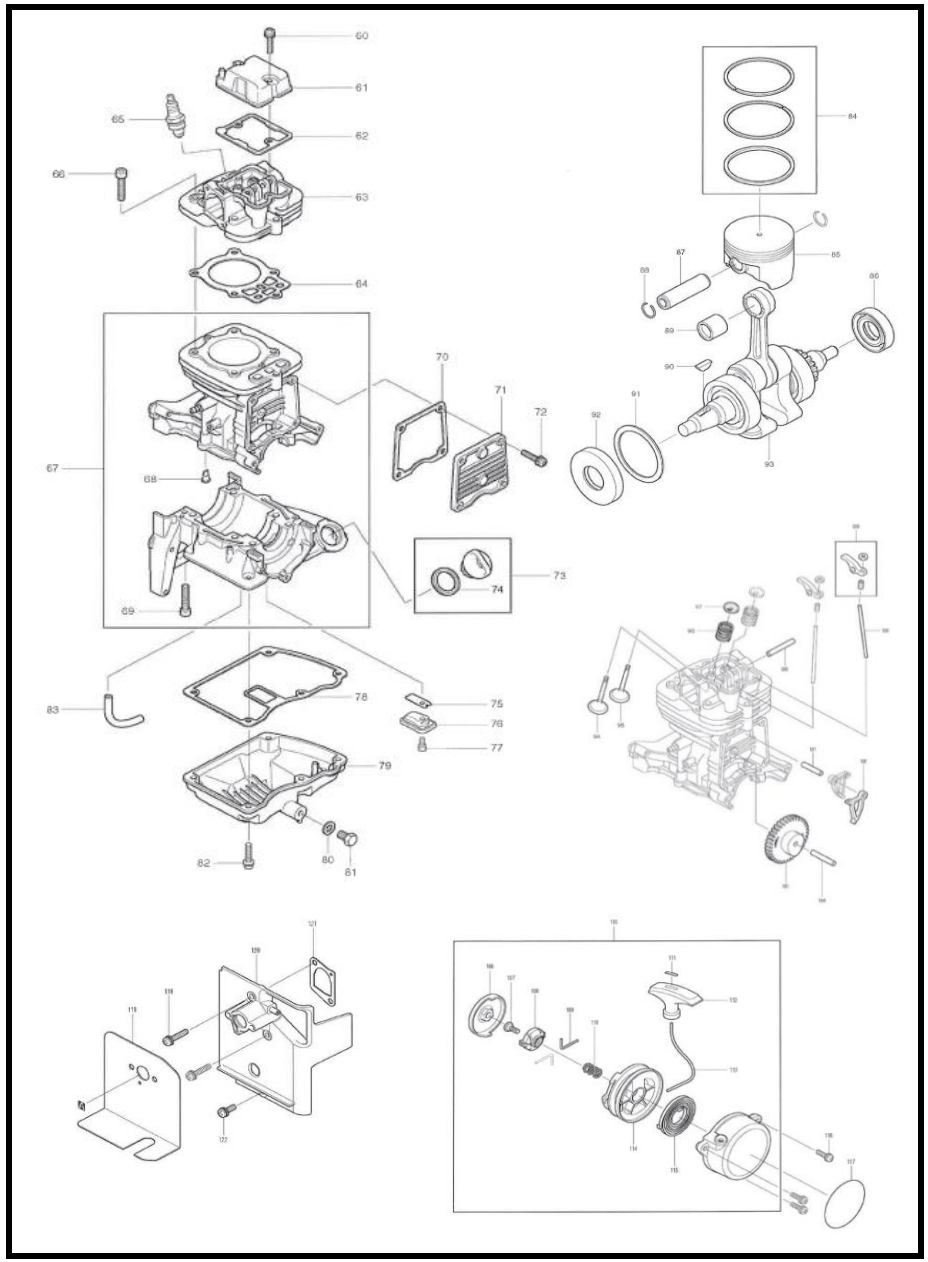

MODEL BBX7600

ITEM	PARTS ID	DESCRIPTION	PRICE/BAHT
060	266789-2	H.S.H.BOLT M5X30 WITH WR	70
061	141771-1	ROCKER COVER COMPLETE	530
062	5971500900	ROCKER COVER GASKET	160
063	5971003002	CYLINDER HEAD COMPLETE	7,380
064	442167-2	CYLINDER HEAD GASKET	290
065	168401-9	SPARK PLUG	770
066	0119069670	SOCKET HEAD BOLT M6X35	110
067	5971007001	CYLINDER BLOCK SET	5,510
068	424201-0	CHECK VALVE	170
069	0119069930	HEX. SOCKET HEAD BOLT M6X30	100
070	442168-0	CAM GEAR GASKET	200
071	318725-5	CAM GEAR COVER	300
072	266813-1	H.S.H.BOLT M5X16 WITH WR	60
073	6676005000	OIL CAP ASSY	290
074	0213229980	GASKET	190
075	346083-9	LEAD VALVE	40
076	5931501300	RETAINER PLATE	180
077	0119049980	SOCKET HEAD BOLT M4X10	90
078	5976500100	OIL CASE GASKET	310
079	5976500000	OIL CASE	730
080	346452-4	GASKET	20
081	0016608120	BOLT M8X12	110
082	0119059390	SOCKET HEAD BOLT M5X25	130
083	0851109960	TUBE	150
084	5972003000	PISTON RING SET	1,460
085	318726-3	PISTON	860
086	213599-8	OIL SEAL 17	480
087	5802500702	PISTON PIN	170
088	233995-4	RING SPRING 12	20
089	0610129940	NEEDLE ROLLER BEARING	360
090	0323049950	WOODRUFF KEY	170
091	267448-1	FLAT WASHER 41	130
092	213598-0	OIL SEAL(L)	390
093	142205-7	CRANK SHAFT COMPLETE	13,260
094	331964-0	INTAKE VALVE	640
095	331965-8	EXHAUST VALVE	710
096	234212-5	COMPRESSION SPRING 11	90
097	331966-6	RETAINER	110
098	5973500501	SHAFT ROCKER ARM	90
099	126005-3	ROCKER ARM ASSEMBLY	680
100	256526-2	PUSH ROD	120
101	5973500700	SHAFT CAM LIFTER	110
102	313266-6	CAM LIFTER L	360
103	5973002002	CAMGEAR ASSY	1,460
104	256200-2	PIN 5	40
105	5975001000	STARTER REWIND	1,350
106	5975500000	PULLEY	330
107	266585-8	TAPPING SCREW 5X12	110
108	424516-5	COLLAR	150
109	326200-7	SWING ARM	140
110	234257-3	FRICTION SPRING	170
111	424360-0	ROPE STOPPER	150
112	424361-8	STARTER KNOB	470
113	444043-6	STARTER ROPE	260
114	441075-4	REEL	500
115	232262-4	SPIRAL SPRING	410
116	266788-4	PAN HEAD SCREW M5X20 WITH WR	40
117	6679500702	MODEL LABEL	200
118	5973501200	CARBURETOR GASKET	230
119	266749-4	HEX. S.H.B. M5X25 WITH WR	120
120	5973009001	INSULATOR COMPL	500
121	162333-2	INSULATOR GASKET	180
122	0119059490	SOCKET HEAD BOLT M5X14 (W,SW)	100

SERVICE DRAWING

MODEL NO. BBX7600

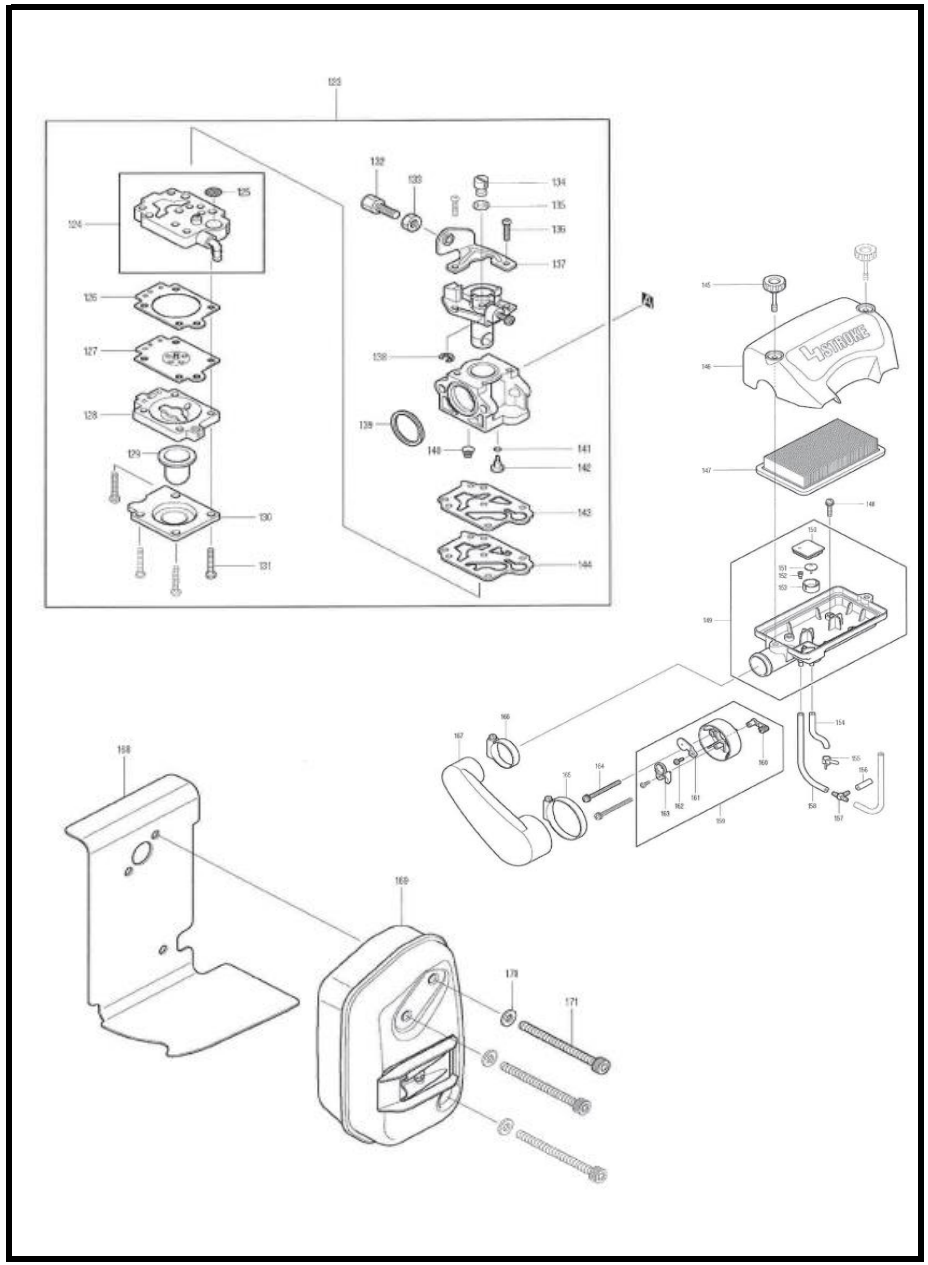

MODEL BBX7600

ITEM	PARTS ID	DESCRIPTION	PRICE/BAHT
123	5976001000	CARBURETOR	4,460
124	5976001010	PUMP BODY ASSY	1,470
125	352010-6	INLET SCREEN	150
126	442154-1	METERING DIAPHRAGM GASKET	220
127	168574-8	METERING DIAPHRAGM	770
128	140438-8	AIR PURGE BODY	640
129	424314-7	PRIMER PUMP	310
130	346270-0	PRIMER PUMP COVER	170
131	266582-4	TAPPING SCREW 3X24	20
132	266795-7	ADJUST SCREW	190
133	264065-8	CABLE ADJUST NUT M6	120
134	325922-6	SWIVEL	270
135	413140-9	WASHER	20
136	266704-6	PAN HEAD SCREW M3X10	130
137	346491-4	BRACKET CABLE	560
138	257964-1	STOP RING E-3	20
139	424444-4	PACKING RING	180
140	234183-6	CONICAL COMPRESSION SPRING 5-9	160
141	213538-8	O RING 2	130
142	5976001020	JET #60	350
143	442155-9	PUMP GASKET	160
144	168575-6	PUMP DIAPHRAGM	320
145	6676501200	KNOB BOLT M5X45	330
146	6676002002	AIR CLEANER COVER	830
147	6676500201	AIR CLEANER ELEMENT	830
148	266494-1	+ PAN HEAD SCREW M5X16	30
149	6676003002	AIR CLEANER CASE ASSY	1,410
150	6676501300	SEPARATOR PLATE	330
151	424315-5	CHECK VALVE	90
152	424316-3	CHECK VALVE	220
153	6676500500	CHECK VALVE PLATE	180
154	412129-4	TUBE 3-105	110
155	282027-4	HOSE CLAMP 6	60
156	422096-5	TUBE 3-25	50
157	452952-5	HOSE JOINT	130
158	0851199960	TUBE 3-190	180
159	5973006000	INTAKE CASE ASSY	410
160	5973501800	CHOKE LEVER	130
161	5973501700	CHOKE PLATE	130
162	5973006010	TAPPING SCREW 4X12	110
163	5973501900	INTAKE PLATE	130
164	0043605650	SCREW ASS'Y M5X65	120
165	0561679990	HOSE CLAMP	200
166	0561439990	HOSE CLAMP	200
167	6676500400	AIR CLEANER DUCT	750
168	5973501302	MUFFLER GASKET	
169	5973001003	MUFFLER EXHAUST	1,470
171	266771-1	SOCKET HEAD BOLT M6X18	90

SERVICE DRAWING

MODEL NO. BBX7600

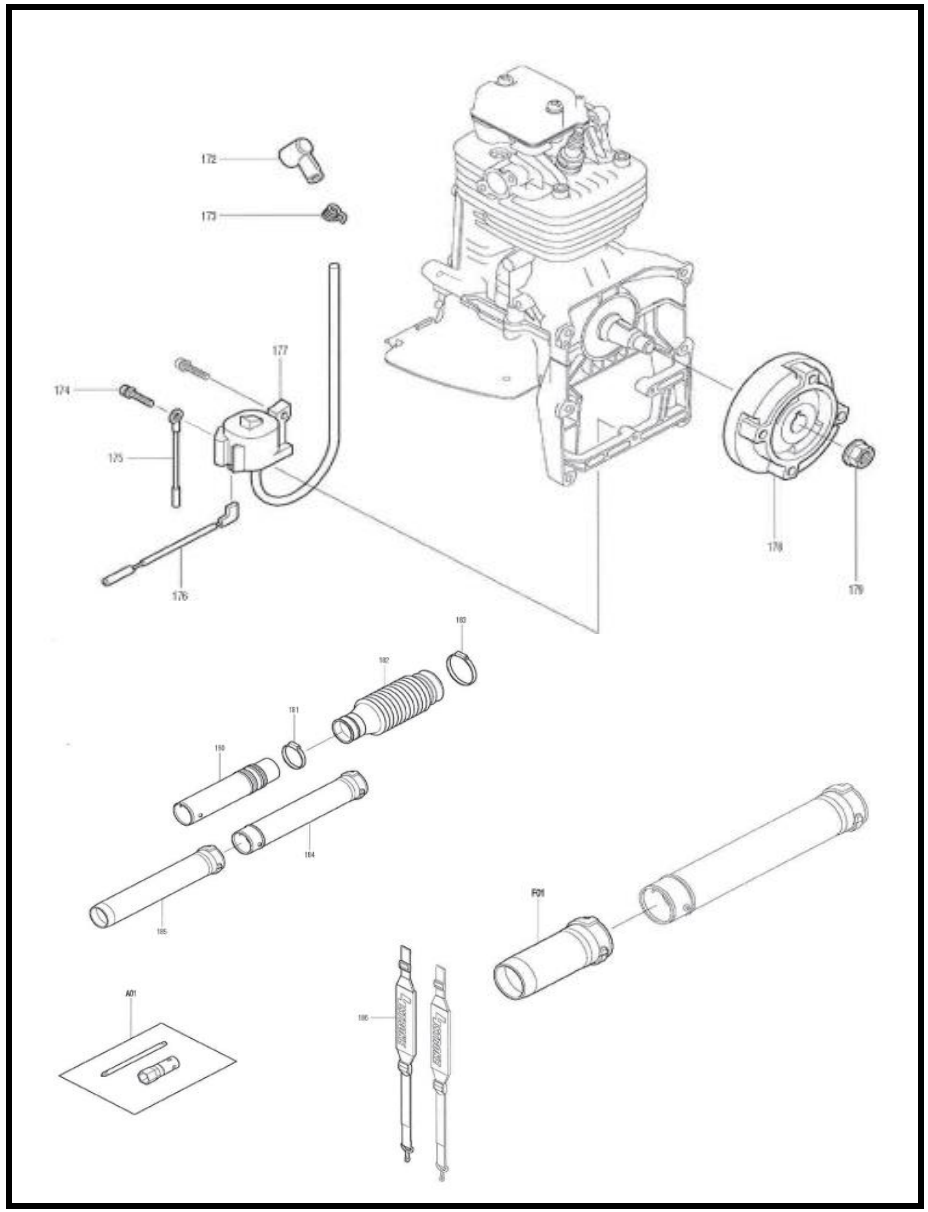

MODEL BBX7600

ITEM	PARTS ID	DESCRIPTION	PRICE/BAHT
172	424105-6	PLUG CAP	90
173	324891-8	PLUG CAP SPRING	30
174	0119049970	SOCKET HEAD BOLT M4X20	100
175	638784-6	WIRE	130
176	638710-5	LEAD WIRE	110
177	5977001010	IGNITION COIL	1,620
178	5977001020	FLYWHEEL COMPL	1,050
179	264054-3	FLANGE NUT M10	60
180	168746-5	SWIVEL PIPE COMPLETE	890
181	0561769990	HOSE CLAMP	230
182	412115-5	FLEXIBLE PIPE	890
183	0561009990	HOSE CLAMP	230
184	6679501801	STRAIGHT PIPE	630
185	6679501900	END PIPE	630
186	6679001000	BAND COMPL	1,060
187	313267-4	CAM LIFTER R	160
188	6672500400	FAN COVER	230
189	6672500300	ROCK RIVET	160
190	443174-8	INSULATION LABEL A	230
191	443175-6	INSULATION LABEL B	180
192	443176-4	INSULATION LABEL C	160
198	331967-4	COTTER	70
199	331937-3	EXHAUST PORT SPACER	130
200	412130-9	TUBE 10-50	70
201	412127-8	TUBE 10-170	100
202	412124-4	TUBE 10-220	120
203	412122-8	TUBE 3-240	190
A01	194717-6	BOX WRENCH SET	390

SERVICE DRAWING

MODEL NO. BHR241

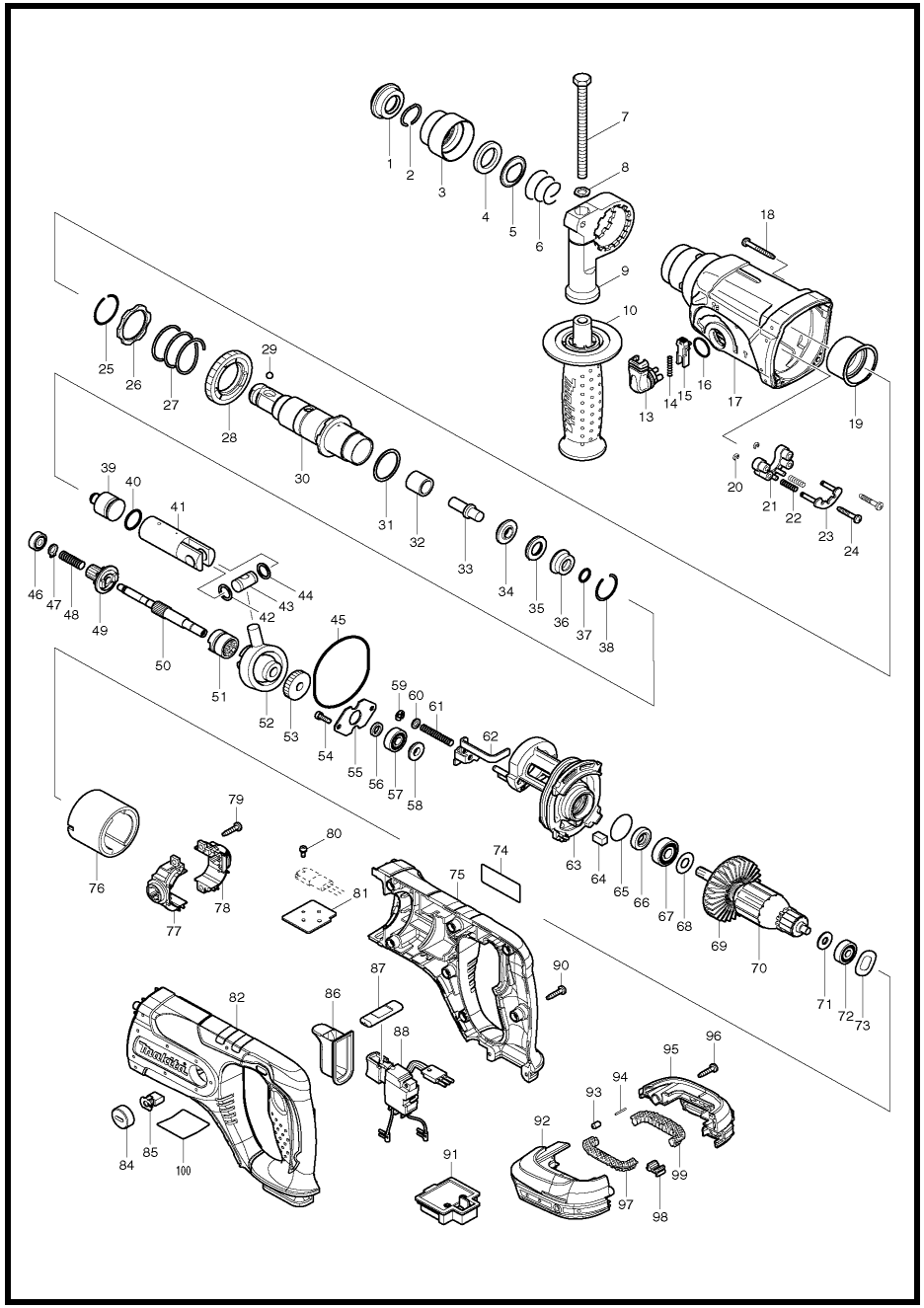

MODEL BHR241

ITEM	PARTS ID	DESCRIPTION	PRICE/BAHT
001	286263-4	CAP 35	110
002	233940-9	RING SPRING 19	60
003	417629-9	CHUCK COVER	110
004	257241-1	RING 21	130
005	345187-4	GUIDE WASHER	90
006	233916-6	CONICAL COMP. SPRING 21-29	30
007	921923-8	HEX. BOLT M8X120	80
008	345280-4	HEX. WASHER	30
009	417630-4	GRIP BASE	190
010	158057-6	GRIP 36 COMPLETE	350
013	162245-9	CHANGE LEVER	130
014	233459-8	COMPRESSION SPRING 3	30
015	419192-8	LOCK BUTTON	80
016	213278-8	O RING 17	40
017	158216-2	GEAR HOUSING COMPLETE	610
018	266351-3	TAPPING SCREW 4X35	30
019	153290-5	NEEDLE BEARING COMPLETE	250
020	961017-7	STOP RING E-3	20
021	417796-0	GUIDE BASE	90
022	233344-5	COMPRESSION SPRING 4	40
023	163430-7	LOCK PLATE COMPLETE	150
024	266374-1	TAPPING SCREW 4X25	30
025	233929-7	RING SPRING 29	40
026	267460-1	WASHER 31	140
027	233401-9	COMPRESSION SPRING 32	100
028	227109-5	SPUR GEAR 51	730
029	216022-2	STEEL BALL 7.0	20
030	158574-6	TOOL HOLDER COMPLETE	1,000
031	267229-3	FLAT WASHER 28	70
032	331769-8	SLEEVE 9	170
033	324669-9	IMPACT BOLT	160
034	324402-9	RING 10	150
035	421955-0	CUSHION RING 13	100
036	324216-6	O RING CASE	280
037	213073-6	O RING 9	110
038	233917-4	RING SPRING 28	40
039	324214-0	STRIKER	160
040	213227-5	O RING 16	100
041	318132-2	PISTON CYLINDER	460
042	267104-3	FLAT WASHER 12	40
043	324215-8	PISTON JOINT	180
044	267104-3	FLAT WASHER 12	40
045	213727-5	O-RING 63	200
046	211012-0	BALL BEARING 606ZZ	230
047	961003-8	RETAINING RING S-7	20
048	233343-7	COMPRESSION SPRING 7	40
049	227179-4	SPUR GEAR 10	900
050	324668-1	CAM SHAFT	380
051	331992-5	CLUTCH CAM	260
052	219014-0	SWASH BEARING 10	1,370
053	226632-7	HELICAL GEAR 25	370
054	266273-7	HEX. SOCKET HEAD BOLT M4X12	60
055	345179-3	BEARING RETAINER	70
056	267234-0	FLAT WASHER 8	40
057	211032-4	BALL BEARING 608ZZ	200
058	324212-4	RING 8	180
059	961011-9	STOP RING E-4	20
060	941102-2	FLAT WASHER 5	30
061	233342-9	COMPRESSION SPRING 6	40
062	345363-0	CHANGE PLATE	150
063	141574-3	INNER HOUSING COMPLETE	710
064	443126-9	FELT	40
065	213407-3	O RING 26	40
066	213077-8	OIL SEAL 10	200
067	210059-1	BALL BEARING 6000DDW	300
068	267213-8	FLAT WASHER 10	50
070	519226-8	ARMATURE ASS'Y 18V	
071	253823-7	FLAT WASHER 7	60
072	210023-2	BALL BEARING 627DDW	210
073	267816-8	WAVE WASHER 15	40
075	188577-6	HOUSING SET	1,420
076	638020-0	YOKE UNIT	1,210
077	643836-0	BRUSH HOLDER	290
078	643837-8	BRUSH HOLDER	290
079	266326-2	TAPPING SCREW 4X18	30
080	911006-2	PAN HEAD SCREW M3X8	30
081	689070-8	HEAT SINK	230
082	188577-6	HOUSING SET	1,420
084	643829-7	HOLDER CAP	60
085	195022-4	CARBON BRUSH CB-441	
086	424111-1	SWITCH COVER	150
087	450615-7	F/R CHANGE LEVER	80
088	650655-7	SWITCH TG553FSB-7B	2,150
090	266326-2	TAPPING SCREW 4X18	30
091	643859-8	TERMINAL	
092	187212-3	BATTERYHOUSING SET	540
093	263036-2	RUBBER PIN 5	120
094	268184-2	PIN 1.5	50
095	187212-3	BATTERYHOUSING SET	540
096	266326-2	TAPPING SCREW 4X18	30
097	424042-4	CUSHION RUBBER	160
098	424026-2	CUSHION	170
099	424042-4	CUSHION RUBBER	160
101	123100-0	TOOL HOLDER ASS'Y	2,490
A01	324219-0	DEPTH GAUGE	100
A02	***DC18RC	DC18RC FAST CHARGER	
A03	197600-6	BATTERY BL1830 SET	7,140
A04	450128-8	BATTERY COVER	70
A05	141643-0	PLASTIC CASE COMPLETE	

SERVICE DRAWING

MODEL NO. BHR261

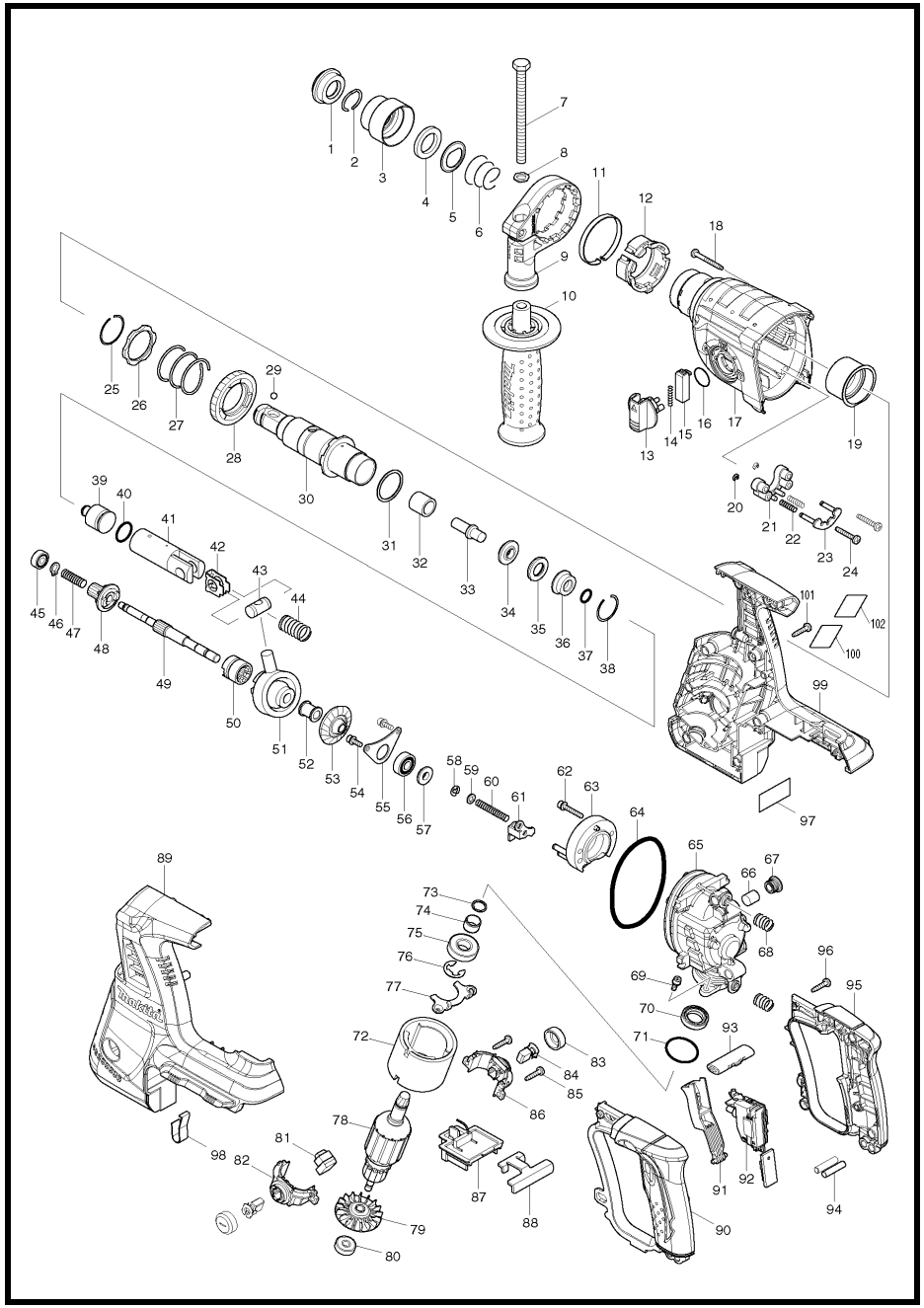

MODEL BHR261

ITEM	PARTS ID	DESCRIPTION	PRICE/BAHT
001	286263-4	CAP 35	110
002	233940-9	RING SPRING 19	60
003	417629-9	CHUCK COVER	110
004	257241-1	RING 21	130
005	345187-4	GUIDE WASHER	90
006	233916-6	CONICAL COMP. SPRING 21-29	30
007	921923-8	HEX. BOLT M8X120	80
008	345280-4	HEX. WASHER	30
009	417630-4	GRIP BASE	190
010	158057-6	GRIP 36 COMPLETE	350
013	450980-4	CHANGE LEVER	160
014	233279-0	COMPRESSION SPRING 4	80
015	450978-1	LOCK BUTTON	90
016	213278-8	O RING 17	40
017	158945-7	GEAR HOUSING COMPLETE	580
018	266351-3	TAPPING SCREW 4X35	30
019	153290-5	NEEDLE BEARING COMPLETE	250
020	961017-7	STOP RING E-3	20
021	417796-0	GUIDE BASE	90
022	233344-5	COMPRESSION SPRING 4	40
023	163430-7	LOCK PLATE COMPLETE	150
024	266374-1	TAPPING SCREW 4X25	30
025	233929-7	RING SPRING 29	40
026	267460-1	WASHER 31	140
027	233401-9	COMPRESSION SPRING 32	100
028	227109-5	SPUR GEAR 51	730
029	216022-2	STEEL BALL 7.0	20
030	158574-6	TOOL HOLDER COMPLETE	1,000
031	267229-3	FLAT WASHER 28	70
032	331769-8	SLEEVE 9	170
033	324669-9	IMPACT BOLT	160
034	324402-9	RING 10	150
035	421955-0	CUSHION RING 13	100
036	324216-6	O RING CASE	280
037	213073-6	O RING 9	110
038	233917-4	RING SPRING 28	40
039	324214-0	STRIKER	160
040	213227-5	O RING 16	100
041	318132-2	PISTON CYLINDER	460
042	346036-8	GUIDE PLATE	70
043	324215-8	PISTON JOINT	180
044	234098-7	COMPRESSION SPRING 14	40
045	211012-0	BALL BEARING 606ZZ	230
046	961003-8	RETAINING RING S-7	20
047	233343-7	COMPRESSION SPRING 7	40
048	227179-4	SPUR GEAR 10	900
049	325976-3	CAM SHAFT	500
050	331992-5	CLUTCH CAM	260
051	219014-0	SWASH BEARING 10	1,370
052	325640-6	SLEEVE 9	120
053	227549-7	SPIRAL BEVEL GEAR 26	420
054	266273-7	HEX. SOCKET HEAD BOLT M4X12	60
055	346038-4	BEARING RETAINER B	90
056	211032-4	BALL BEARING 608ZZ	200
057	324212-4	RING 8	180
058	961011-9	STOP RING E-4	20
059	941102-2	FLAT WASHER 5	30
060	233342-9	COMPRESSION SPRING 6	40
061	345220-2	CHANGE PLATE	110
062	922148-7	HEX. SOCKET HEAD BOLT M4X25	60
063	158944-9	INNER SUPPORT COMPLETE	620
064	213728-3	O-RING 68	70
065	318392-6	INNER HOUSING	1,380
066	443143-9	FILTER	90
067	424185-2	CAP	60
068	234097-9	COMPRESSION SPRING 10	40
069	266273-7	HEX. SOCKET HEAD BOLT M4X12	60
070	213231-4	OIL SEAL 15	390
071	213437-4	O RING 28	80
072	632828-4	YOKE UNIT	1,690
073	961082-6	RETAINING RING WR12	50
074	331596-3	SLEEVE 12	90
075	211131-2	BALL BEARING 6001DDW	310
076	961016-9	STOP RING E-10	40
077	346037-6	BEARING RETAINER A	140
078	519235-7	ARMATURE ASS'Y 36V	
080	210022-4	BALL BEARING 626DDW	280
081	631850-8	LIGHT CIRCUIT	380
082	539214-9	BRUSH HOLDER ASS'Y	330
083	643829-7	HOLDER CAP	60
084	195023-2	CARBON BRUSH SET CB-442	
085	266326-2	TAPPING SCREW 4X18	30
086	539215-7	BRUSH HOLDER ASS'Y	330
087	638978-3	TERMINAL UNIT	450
088	346039-2	SUPPORT PLATE	110
089	187231-9	HOUSING SET	1,650
090	188639-0	HANDLE SET	590
091	450981-2	SWITCH LEVER	110
092	650619-1	SWITCH C3HZ-2A-PBLM	2,450
093	450979-9	F/R CHANGE LEVER	90
094	256261-2	PIN 6	80
095	188639-0	HANDLE SET	590
096	266326-2	TAPPING SCREW 4X18	30
098	344903-1	VIBRATION ISOLATOR PLATE	160
099	187231-9	HOUSING SET	1,650
101	266326-2	TAPPING SCREW 4X18	30
103	123100-0	TOOL HOLDER ASS'Y	2,490
A01	194683-7	GREASE VESSEL SET	520
A02	324219-0	DEPTH GAUGE	100
A03	443122-7	CLOTH	220
A06	***DC36RA	DC36RA FAST CHARGER	
A07	194873-2	BATTERY BL3626 SET	22,610
A08	451153-2	BATTERY COVER	140

SERVICE DRAWING

MODEL BHR262

MODEL NO. BHR262

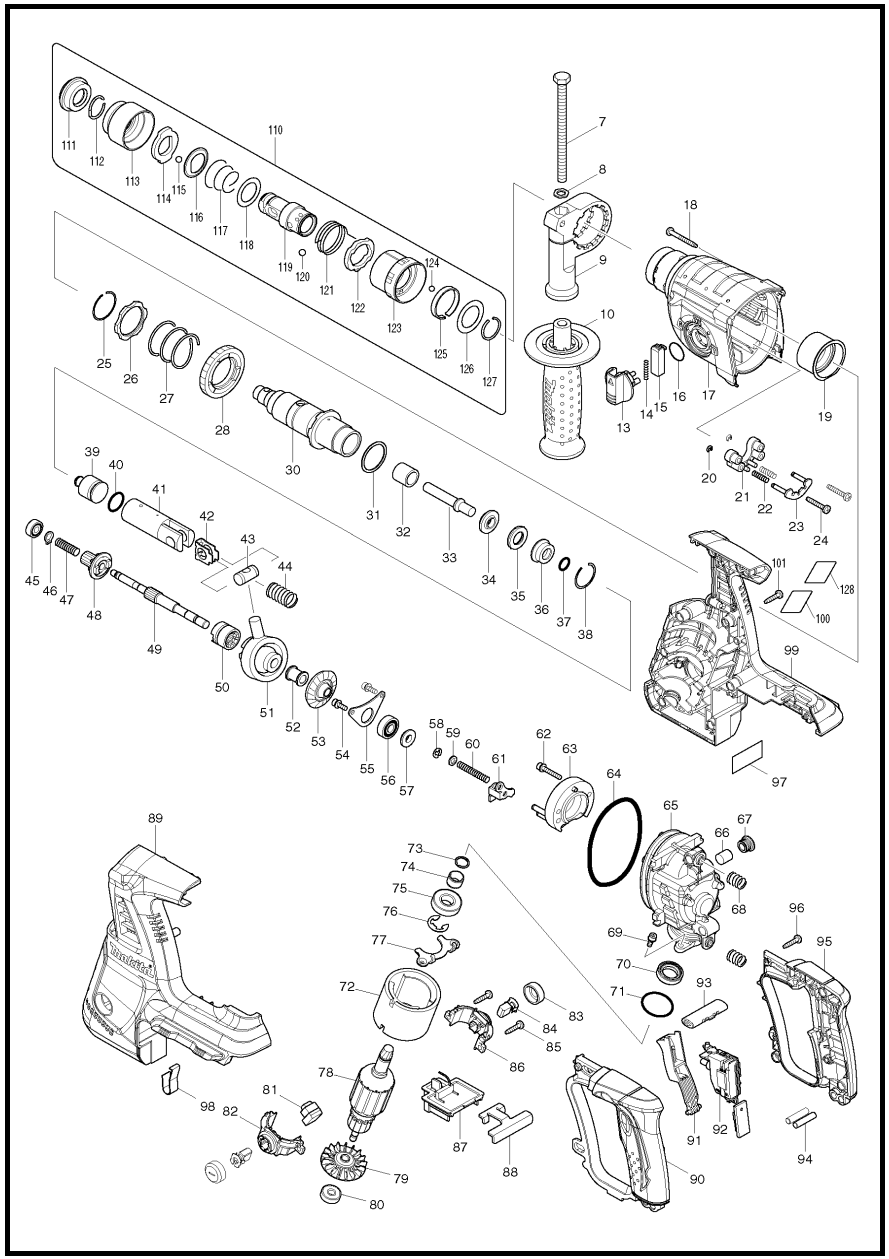

ITEM	PARTS ID	DESCRIPTION	PRICE/BAHT	ITEM	PARTS ID	DESCRIPTION	PRICE/BAHT
001	286263-4	CAP 35	110	055	346038-4	BEARING RETAINER B	90
002	233940-9	RING SPRING 19	60	056	211032-4	BALL BEARING 608ZZ	200
003	417629-9	CHUCK COVER	110	057	324212-4	RING 8	180
004	257241-1	RING 21	130	058	961011-9	STOP RING E-4	20
005	345187-4	GUIDE WASHER	90	059	941102-2	FLAT WASHER 5	30
006	233916-6	CONICAL COMP. SPRING 21-29	30	060	233342-9	COMPRESSION SPRING 6	40
007	921923-8	HEX. BOLT M8X120	80	061	345220-2	CHANGE PLATE	110
008	345280-4	HEX. WASHER	30	062	922148-7	HEX. SOCKET HEAD BOLT M4X25	60
009	417630-4	GRIP BASE	190	063	158944-9	INNER SUPPORT COMPLETE	620
010	158057-6	GRIP 36 COMPLETE	350	064	213728-3	O-RING 68	70
013	450980-4	CHANGE LEVER	160	065	318392-6	INNER HOUSING	1,380
014	233279-0	COMPRESSION SPRING 4	80	066	443143-9	FILTER	90
015	453706-3	LOCK BUTTON	90	067	424185-2	CAP	60
016	213278-8	O RING 17	40	068	234097-9	COMPRESSION SPRING 10	40
017	213345-9	OIL SEAL 25	110	069	266273-7	HEX. SOCKET HEAD BOLT M4X12	60
017	158945-7	GEAR HOUSING COMPLETE	580	070	213231-4	OIL SEAL 15	390
018	266351-3	TAPPING SCREW 4X35	30	071	213437-4	O RING 28	80
019	153290-5	NEEDLE BEARING COMPLETE	250	072	632828-4	YOKE UNIT	1,690
020	961017-7	STOP RING E-3	20	073	961082-6	RETAINING RING WR12	50
021	417796-0	GUIDE BASE	90	074	331596-3	SLEEVE 12	90
022	233344-5	COMPRESSION SPRING 4	40	075	211131-2	BALL BEARING 6001DDW	310
023	163430-7	LOCK PLATE COMPLETE	150	076	961016-9	STOP RING E-10	40
024	266374-1	TAPPING SCREW 4X25	30	077	346037-6	BEARING RETAINER A	140
025	233929-7	RING SPRING 29	40	078	519235-7	ARMATURE ASS'Y 36V INC. 73-76,79,	
026	267460-1	WASHER 31	140	079	240037-7	FAN 44	
027	233401-9	COMPRESSION SPRING 32	100	080	210022-4	BALL BEARING 626DDW	280
028	227109-5	SPUR GEAR 51	730	081	631850-8	LIGHT CIRCUIT	380
029	216022-2	STEEL BALL 7.0	20	082	638660-4	BRUSH HOLDER	280
030	158574-6	TOOL HOLDER COMPLETE	1,000	083	643829-7	HOLDER CAP	60
031	267229-3	FLAT WASHER 28	70	084	195023-2	CARBON BRUSH SET CB-442	
032	331769-8	SLEEVE 9	170	085	266326-2	TAPPING SCREW 4X18	30
033	324669-9	IMPACT BOLT	160	086	638661-2	BRUSH HOLDER	290
034	324402-9	RING 10	150	087	638978-3	TERMINAL UNIT	450
035	421955-0	CUSHION RING 13	100	088	346039-2	SUPPORT PLATE	110
036	324216-6	O RING CASE	280	089	263005-3	RUBBER PIN 6	30
037	213073-6	O RING 9	110	089	263025-7	RUBBER PIN 4 INC. 99	30
038	233917-4	RING SPRING 28	40	089	187231-9	HOUSING SET	1,650
039	324214-0	STRIKER	160	090	188639-0	HANDLE SET INC. 95	590
040	213227-5	O RING 16	100	091	450981-2	SWITCH LEVER	110
041	318132-2	PISTON CYLINDER	460	092	650619-1	SWITCH C3HZ-2A-PBLM	2,450
042	346036-8	GUIDE PLATE	70	093	450979-9	F/R CHANGE LEVER	90
043	324215-8	PISTON JOINT	180	094	256261-2	PIN 6	80
044	234098-7	COMPRESSION SPRING 14	40	095	188639-0	HANDLE SET INC. 90	590
045	211012-0	BALL BEARING 606ZZ	230	096	266326-2	TAPPING SCREW 4X18	30
046	961003-8	RETAINING RING S-7	20	097	897473-4	BHR262 SERIAL NO. LABEL	70
047	233343-7	COMPRESSION SPRING 7	40	098	344903-1	VIBRATION ISOLATOR PLATE	160
048	227179-4	SPUR GEAR 10	900	099	263005-3	RUBBER PIN 6	30
049	325976-3	CAM SHAFT	500	099	263025-7	RUBBER PIN 4 INC. 89	30
050	331992-5	CLUTCH CAM	260	099	187231-9	HOUSING SET	1,650
051	219014-0	SWASH BEARING 10	1,370	101	266326-2	TAPPING SCREW 4X18	30
052	325640-6	SLEEVE 9	120	102	893038-0	CLEAR LABEL	40
053	227549-7	SPIRAL BEVEL GEAR 26	420	103	893072-0	CLEAR LABEL	20
054	266273-7	HEX. SOCKET HEAD BOLT M4X12	60	A01	194683-7	GREASE VESSEL SET	520

SERVICE DRAWING

MODEL NO. BHR262

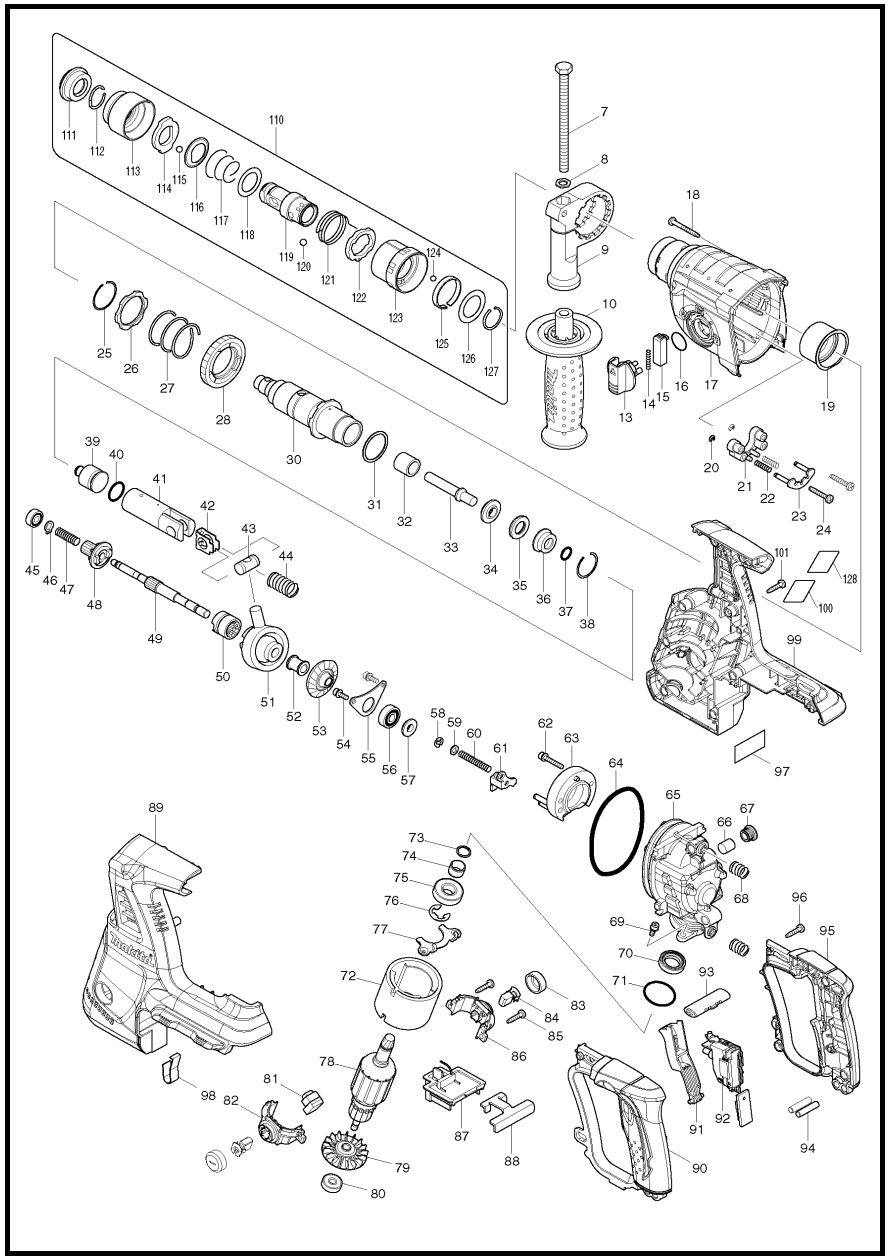

MODEL BHR262

ITEM	PARTS ID	DESCRIPTION	PRICE/BAHT
A02	324219-0	DEPTH GAUGE	100
A03	443122-7	CLOTH	220
A04B	194873-2	BATTERY BL3626 SET	22,610
A05B	451153-2	BATTERY COVER	140
A06B	***DC36RA	DC36RA FAST CHARGER	15,960
A07B	141407-2	PLASTIC CARRYING CASE COMPLET	
A07B	162271-8	LATCH	150
A07B	325636-7	SHAFT	170
A07B	450990-1	HANDLE	170

SERVICE DRAWING

MODEL NO. BHX2500

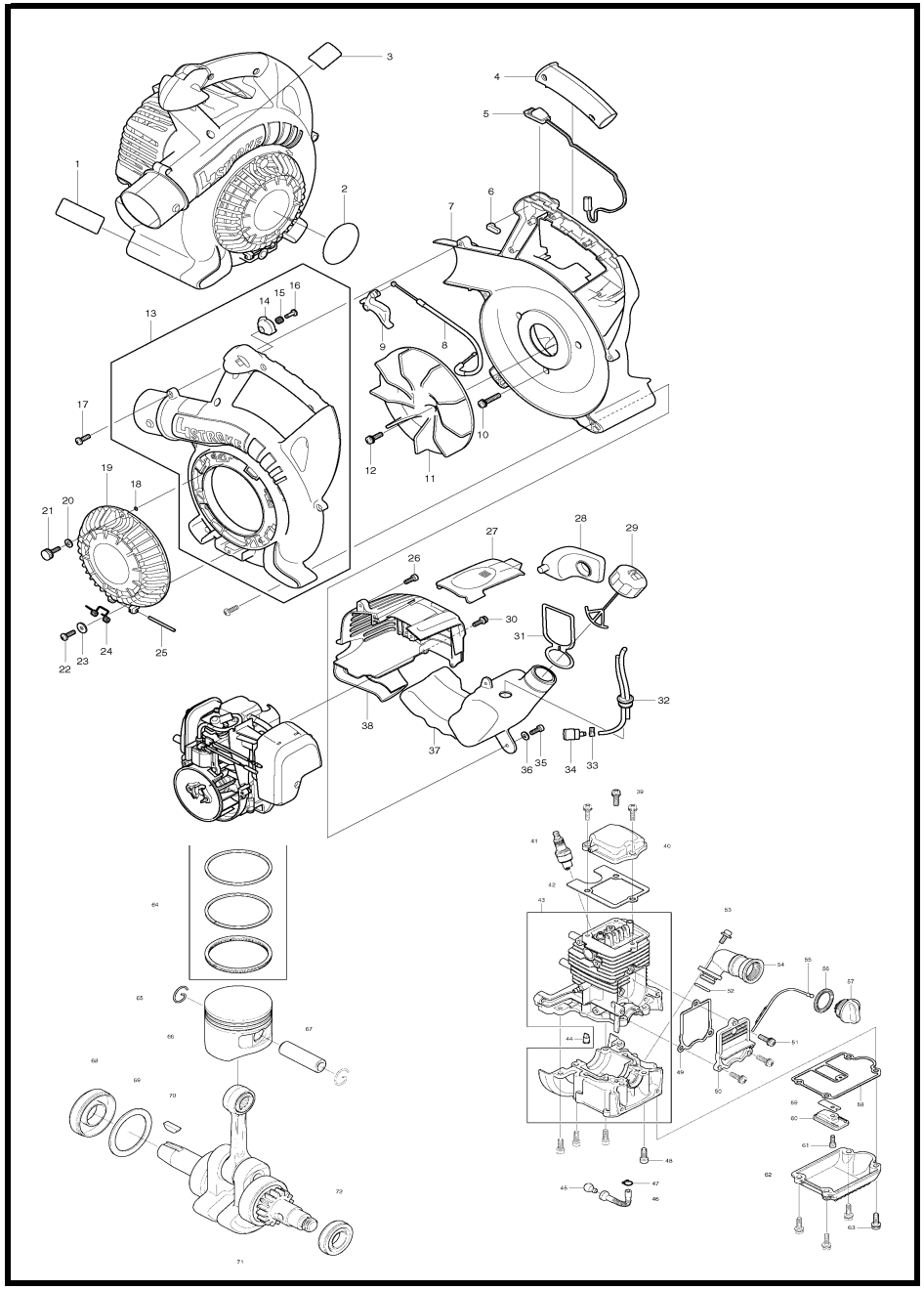

MODEL BHX2500

ITEM	PARTS ID	DESCRIPTION	PRICE/BAHT
001	810451-7	CAUTION LABEL	40
002	808139-1	BHX2500 MODEL NO.LABEL	
003	810450-9	CAUTION LABEL	40
004	273665-3	GRIP	250
005	638640-0	SWITCH COMPLETE	590
006	424182-8	FRICTION RUBBER	120
007	450958-7	VOLUTE CASE R	2,720
008	168518-8	CONTROL CABLE	510
009	450960-0	THROTTLE LEVER	150
010	911253-5	PAN HEAD SCREW M5X30	50
012	265584-7	HEX SOCKET HEAD BOLT M6x20 WR	
013	125533-5	VOLUTE CASE L ASSEMBLY	2,290
014	452216-7	CRUISE LEVER	230
015	234314-7	COMPRESSION SPRING 7	120
016	266870-9	TAPPING SCREW (4X16)	70
017	265878-0	TAPPING SCREW BT 5X16	30
018	213022-3	O RING 3	20
019	6601502705	PROTECTOR	580
020	424180-2	GASKET	60
021	911148-2	PAN HEAD SCREW M4X25	70
022	265878-0	TAPPING SCREW BT 5X16	30
023	267394-8	FLAT WASHER 5	40
024	233536-6	TORSION SPRING 5	110
025	268230-1	ROD 4	90
026	265878-0	TAPPING SCREW BT 5X16	30
027	450964-2	PLUG COVER	180
028	424181-0	OIL GUARD	230
029	125472-9	FUEL TANK CAP ASSEMBLY	410
030	911128-8	PAN HEAD SCREW M4X16	30
031	810455-9	CAUTION PLATE	110
032	158911-4	TUBE COMPLETE	320
033	345920-4	HOSE CLAMP	40
034	163447-0	GASOLINE FILTER	230
035	265878-0	TAPPING SCREW BT 5X16	30
036	267394-8	FLAT WASHER 5	40
037	450988-8	FUEL TANK	
038	452630-7	ENGINE COVER	1,050
039	922223-9	H.S.H.BOLT M5X16 WITH WR	40
040	140023-7	ROCKER COVER COMPLETE	370
041	168401-9	SPARK PLUG	770
042	162275-0	ROCKER COVER GASKET	150
043	125914-3	CYLINDER BLOCK SET	3,640
044	424201-0	CHECK VALVE	170
045	325666-8	OIL WEIGHT	180
046	424202-8	OIL TUBE	200
047	282020-8	HOSE CLAMP	40
048	922217-4	HEX. SOCKET HEAD BOLT M5X14	40
049	162274-2	CAM GEAR COVER GASKET	320
050	318443-5	CAM GEAR COVER	180
051	922217-4	HEX. SOCKET HEAD BOLT M5X14	40
052	213591-4	O RING 14	140
053	922213-2	H.S.H.BOLT M5X12 WITH WR	30
054	140813-8	OIL PIPE COMPLETE	240
055	452610-3	OIL GAUGE	190
056	424343-0	GASKET	40
057	452047-4	OIL CAP	90
058	162276-8	CASE GASKET	190
059	346083-9	LEAD VALVE	40
060	318440-1	RETAINER PLATE	110
061	922112-8	HEX. SOCKET HEAD BOLT M4X10	30
062	318442-7	OIL CASE	200
063	922217-4	HEX. SOCKET HEAD BOLT M5X14	40
064	195145-8	PISTON RING SET	950
065	233976-8	CLIP	20
066	318441-9	PISTON	590
067	257781-9	PISTON PIN	110
068	213147-3	OIL SEAL 12	200
069	267400-9	FLAT WASHER 23	40
070	254040-2	WOODRUFF KEY 3	110
071	135374-1	CRANKSHAFT ASSEMBLY	4,830
072	213769-9	OIL SEAL 10	200

SERVICE DRAWING

MODEL NO. BHX2500

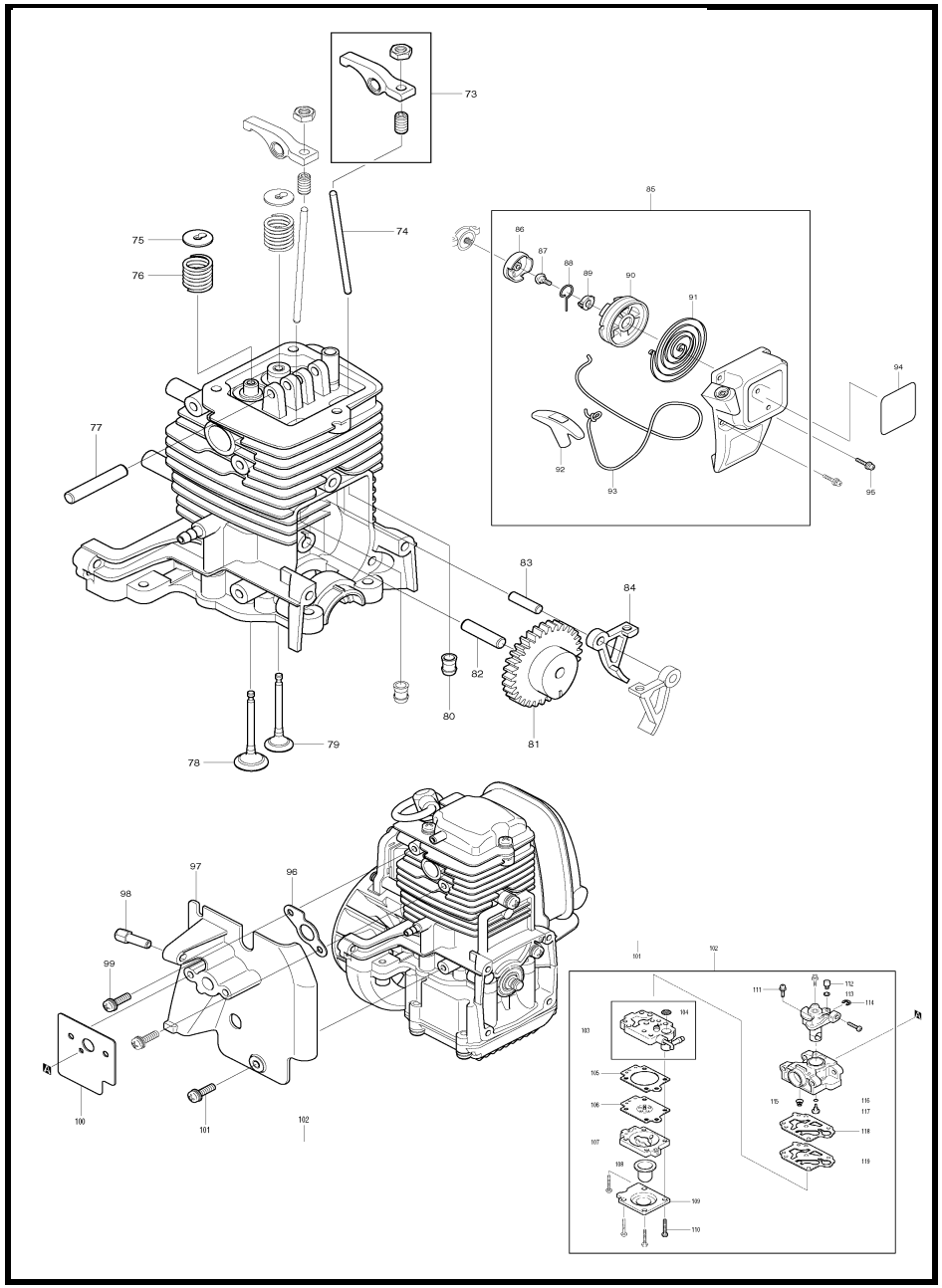

MODEL BHX2500

ITEM	PARTS ID	DESCRIPTION	PRICE/BAHT
073	125554-7	ROCKER ARM ASSEMBLY	380
074	256865-0	ROD 2.5	60
075	325668-4	SPRING RETAINER	120
076	234108-0	COMPRESSION SPRING 9	70
077	256200-2	PIN 5	40
078	325670-7	INTAKE VALVE	390
079	325669-2	EXHAUST VALVE	390
080	424200-2	SPACER	60
081	125552-1	CAM GEAR ASSEMBLY	650
082	268238-5	PIN 5	40
083	268239-3	PIN 4	40
084	313169-4	CAM LIFTER	150
085	125917-7	STARTER COVER ASSY	960
086	168483-1	PULLEY	130
087	266585-8	TAPPING SCREW 5X12	110
088	325923-4	SWING ARM	110
089	451938-6	COLLAR	120
090	451937-8	REEL	280
091	232258-5	SPIRAL SPRING	380
092	424319-7	STARTER KNOB	200
093	444019-3	STARTER ROPE	140
094	893304-5	MAKITA LOGO LABEL	
095	911128-8	PAN HEAD SCREW M4X16	30
096	413120-5	INSULATOR GASKET	40
097	125916-9	INSULATOR ASSY	540
098	325934-9	ADJUST SCREW	80
099	922228-9	H.S.H.BOLT M5X18 WITH WR	40
100	413138-6	CARBURETOR GASKET	90
101	922213-2	H.S.H.BOLT M5X12 WITH WR	30
102	168641-9	CARBURETOR	2,890
103	140808-1	BODY PUMP ASSY	1,110
104	352010-6	INLET SCREEN	150
105	442154-1	METERING DIAPHRAGM GASKET	220
106	168620-7	METERING DIAPHRAGM	750
107	140438-8	AIR PURGE BODY	640
108	424314-7	PRIMER PUMP	310
109	346270-0	PRIMER PUMP COVER	170
110	266582-4	TAPPING SCREW 3X24	20
111	266581-6	PAN HEAD SCREW M3X8 WITH W	20
112	325922-6	SWIVEL	270
113	413140-9	WASHER	20
114	257964-1	STOP RING E-3	20
115	234183-6	CONICAL COMPRESSION SPRING 5-9	160
116	213538-8	O RING 2	130
117	326027-5	JET	440
118	442155-9	PUMP GASKET	160
119	168575-6	PUMP DIAPHRAGM	320

SERVICE DRAWING

MODEL NO. BHX2500

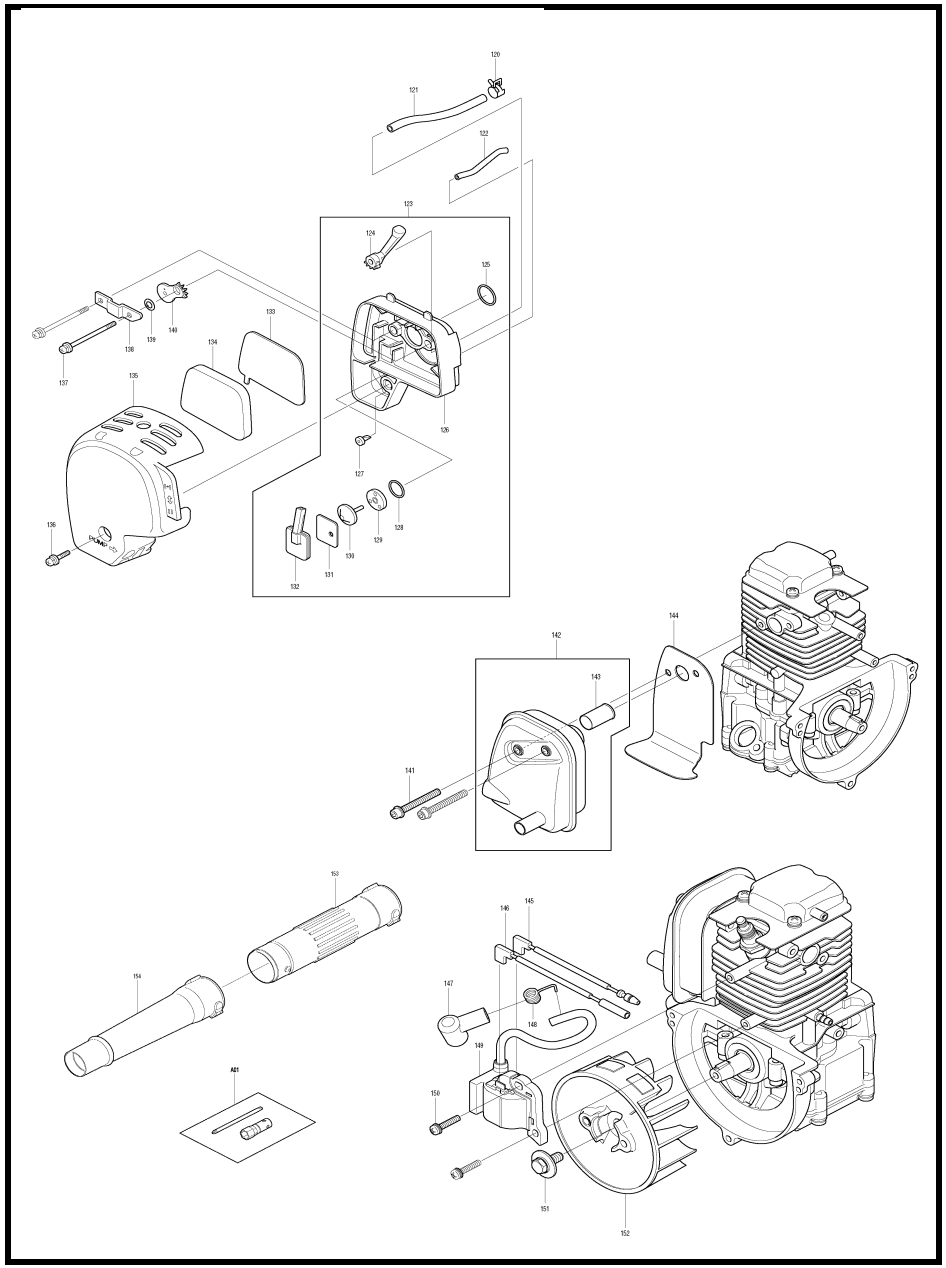

MODEL BHX2500

ITEM	PARTS ID	DESCRIPTION	PRICE/BAHT
120	345918-1	HOSE CLAMP	40
121	422041-0	BREATHER PIPE	150
122	422070-3	PIPE	90
123	125468-0	CLEANER PLATE ASSEMBLY	990
124	451925-5	CHOKE LEVER	90
125	213540-1	O RING 15	60
126	140814-6	AIR CLEANER PLATE COMPLETE	280
127	424316-3	CHECK VALVE	220
128	213539-6	O RING 14	60
129	451924-7	CHECK VALVE PLATE	100
130	424315-5	CHECK VALVE	90
131	168577-2	SEPARATOR GASKET	50
132	168576-4	SEPARATOR PLATE	320
133	443140-5	AIR CLEANER ELEMENT	80
134	443141-3	AIR CLEANER ELEMENT	150
135	450561-4	AIR CLEANER COVER	100
136	911218-7	PAN HEAD SCREW M5X14	30
137	265188-5	+PAN HEAD SCREW M5X68	90
138	345919-9	PLATE	40
139	423376-2	GASKET	20
140	450560-6	CHOKE PLATE	70
141	266440-4	HEX SOCKET HEAD BOLT M5X40	120
142	168643-5	MUFFLER,EXHAUST	460
143	324980-9	SPARK ARRESTER	110
144	168593-4	MUFFLER GASKET	150
145	638709-0	LEAD WIRE	110
146	638710-5	LEAD WIRE	110
147	424105-6	PLUG CAP	90
148	324891-8	PLUG CAP SPRING	30
149	168501-5	IGNITION COIL	1,760
150	922138-0	H.S.H.BOLT M4X20 WITH WR	60
151	265577-4	HEX HEAD BOLT M6X16	40
152	318702-7	FLYWHEEL	2,340
153	451752-0	NOZZLE	380
154	451753-8	NOZZLE END	540
156	324961-3	INTAKE PIPE	140
157	213078-6	O-RING 10	30
A01	194717-6	BOX WRENCH SET	390
E01	140352-8	HOSE CLAMP	380

SERVICE DRAWING

MODEL NO. BO3700

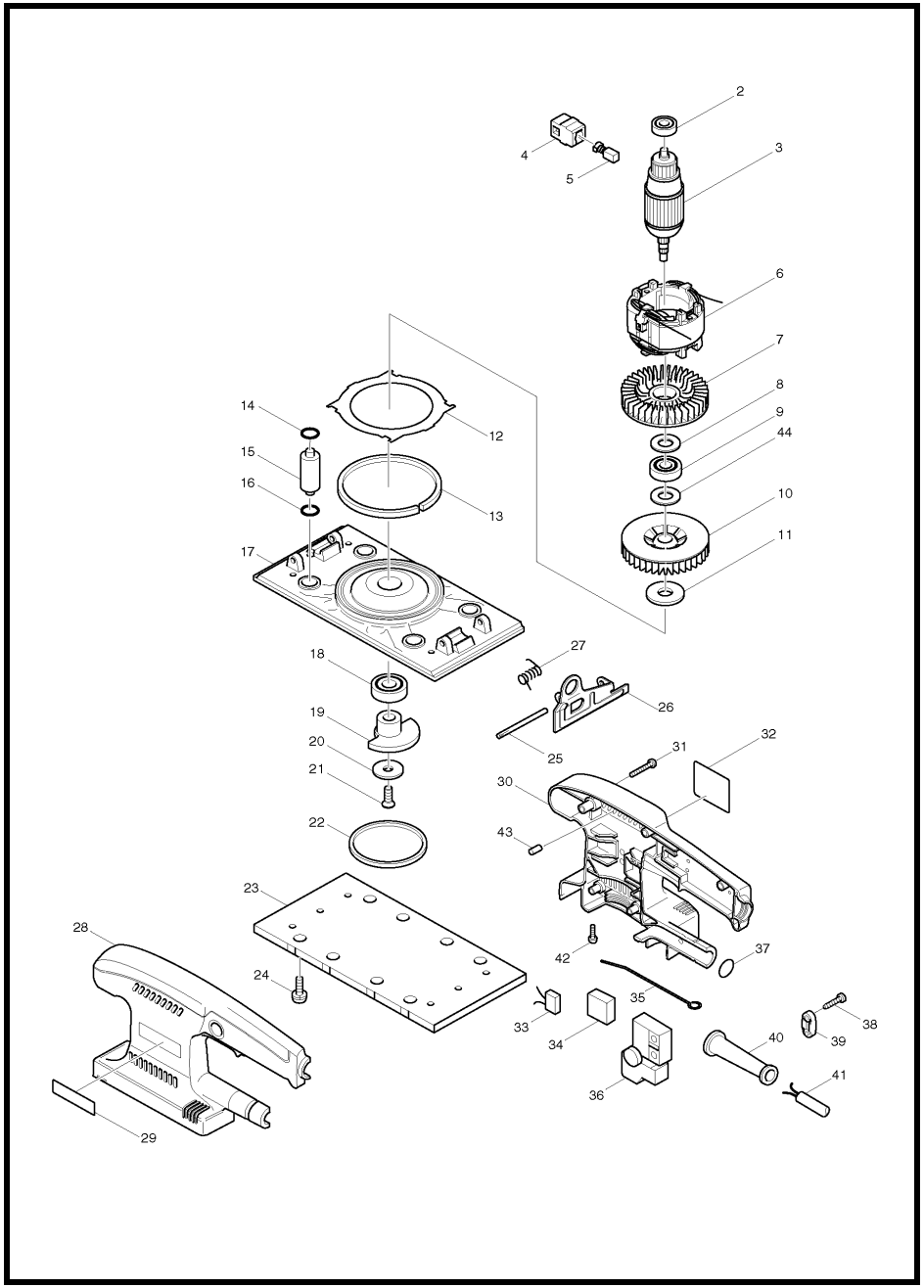

MODEL BO3700

ITEM	PARTS ID	DESCRIPTION	PRICE/BAHT
002	210025-8	BALL BEARING 627LLB	250
003	517338-1	ARMATURE ASS'Y 220V	
004	643552-4	BRUSH HOLDER 5-8	100
005	B-80254	CARBON BRUSH SET CB-64A	
006	593458-5	FIELD ASS'Y 220-240V	130
008	253311-4	THIN WASHER 10	80
009	211087-9	BALL BEARING 6200DDW	380
010	240029-6	FAN 68	180
011	267216-2	FLAT WASHER 8	70
012	344832-8	PLATE	130
013	443108-1	FELT 6X225X3	120
014	213047-7	O RING 4	100
015	324031-8	FOOT	100
016	213047-7	O RING 4	100
017	317285-4	BASE	1,930
018	211236-8	BALL BEARING 6002DDW	550
019	317284-6	BALANCER	730
020	267001-3	FLAT WASHER 7	80
021	912222-9	COUNTERSUNK HEAD SCREW M5X16	50
022	261114-2	SPONGE WASHER 53	50
023	140441-9	PAD COMPLETE	400
024	911111-5	PAN HEAD SCREW M4X10	30
025	256739-5	PIN 4-55	80
026	345342-8	PAPER CLAMP	190
027	231647-1	TORSION SPRING 4	90
028	183232-5	HOUSING SET	1,420
030	183232-5	HOUSING SET	1,420
031	265995-6	TAPPING SCREW 4X18	40
035	323947-4	EARTH WIRE	100
036	651286-5	SWITCH SGEL206C-5	550
037	213315-8	O RING 19	50
038	265995-6	TAPPING SCREW 4X18	40
039	687052-4	STRAIN RELIEF	80
040	682502-4	CORD GUARD 8-85	110
041	691055-2	POWER SUPPLY CORD 0.75-2-2.0	1,100
042	266007-8	TAPPING SCREW BIND PT 3X10	30
043	263002-9	RUBBER PIN 4	30
044	253311-4	THIN WASHER 10	80
045	424056-3	SPONGE SLEEVE 9	50
A02	151780-2	DUST BAG COMPLETE	610
A03	192989-7	PUNCH PLATE	540

SERVICE DRAWING

MODEL NO. BO3710

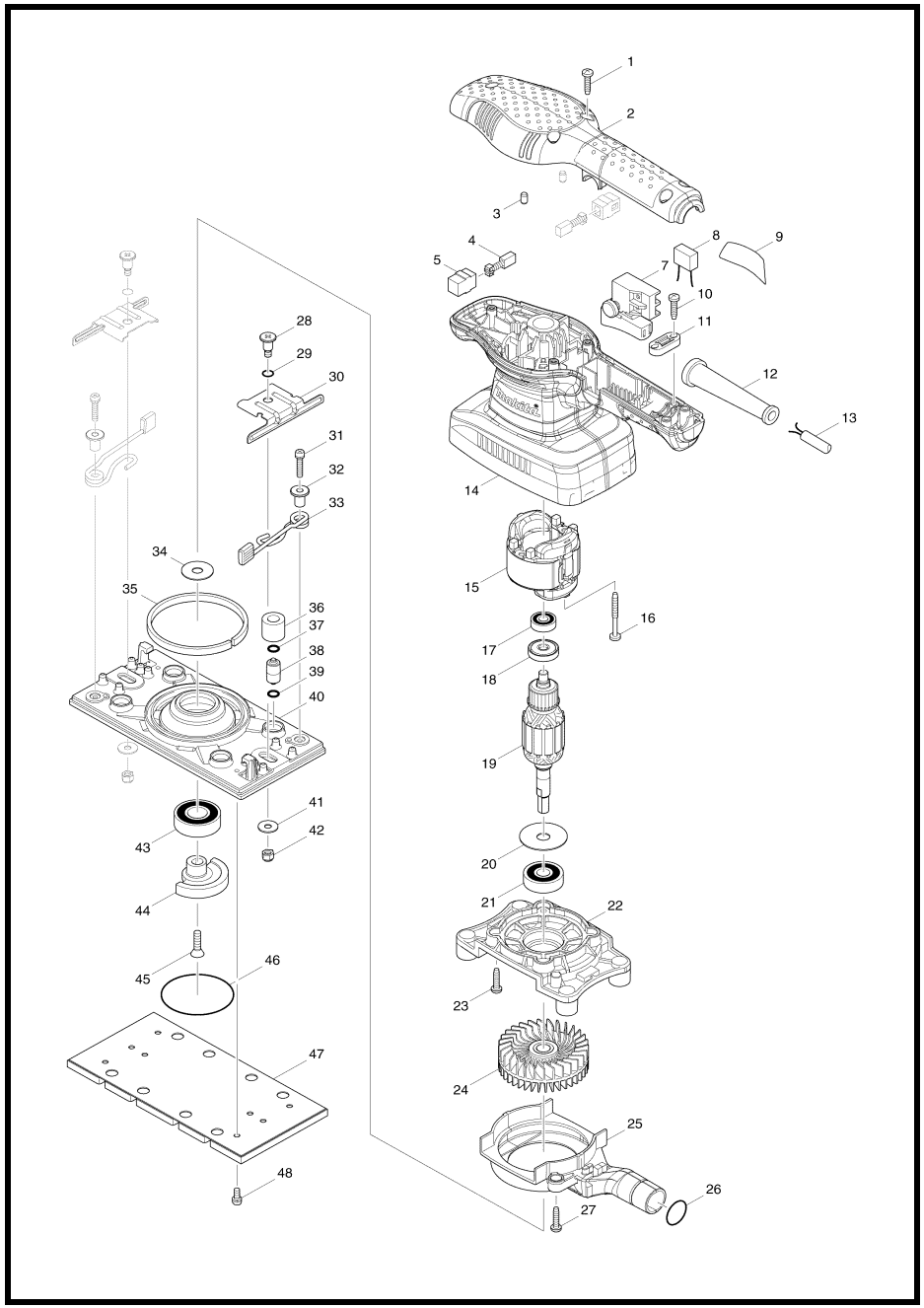

MODEL BO3710

ITEM	PARTS ID	DESCRIPTION	PRICE/BAHT
001	265995-6	TAPPING SCREW 4X18	40
002	451268-5	TOP COVER	340
003	263002-9	RUBBER PIN 4	30
004	B-80254	CARBON BRUSH SET CB-64A	
005	643552-4	BRUSH HOLDER 5-8	100
007	651286-5	SWITCH SGEL206C-5	550
010	265995-6	TAPPING SCREW 4X18	40
011	687124-5	STRAIN RELIEF	70
012	682569-2	CORD GUARD 8-85	110
013	691055-2	POWER SUPPLY CORD 0.75-2-2.0	1,100
014	451270-8	MOTOR HOUSING	700
015	593703-8	FIELD ASSEMBLY 220-240V	
016	266048-4	TAPPING SCREW 4X40	60
017	210062-2	BALL BEARING 607ZZ	130
018	681652-2	INSULATION WASHER	60
019	515783-4	ARMATURE ASSEMBLY 220V	
020	253180-3	FLAT WASHER 10	80
021	211087-9	BALL BEARING 6200DDW	380
022	451266-9	BEARING BOX	170
023	265995-6	TAPPING SCREW 4X18	40
024	240117-9	FAN 68	
025	451267-7	FAN GUIDE	180
026	213315-8	O RING 19	50
027	265995-6	TAPPING SCREW 4X18	40
028	266511-7	+ FLAT FILLISTER HEAD SCREW M5	50
029	213045-1	O-RING 6	50
030	346102-1	PAPER CLAMP	100
031	911136-9	PAN HEAD SCREW M4X20	50
032	310300-3	SPRING GUIDE	60
033	162279-2	LEVER COMPLETE	160
034	267353-2	FLAT WASHER 8	50
035	423469-5	SPONGE 6X105X3	40
036	424056-3	SPONGE SLEEVE 9	50
037	213983-7	O RING 4	70
038	318151-8	FOOT	90
039	213983-7	O RING 4	70
040	318484-1	BASE	570
041	253807-5	FLAT WASHER 5	40
042	252103-8	HEX. LOCK NUT M5-8	110
043	211228-7	BALL BEARING 6202DDW	430
044	310301-1	BALANCER	290
045	912222-9	COUNTERSUNK HEAD SCREW M5X16	50
046	213656-2	O RING 53	80
047	140441-9	PAD COMPLETE	400
048	911111-5	PAN HEAD SCREW M4X10	30
A01	135327-0	DUST BOX ASSEMBLY	680
A02	451271-6	PUNCH PLATE	170

SERVICE DRAWING

MODEL NO. BO3711

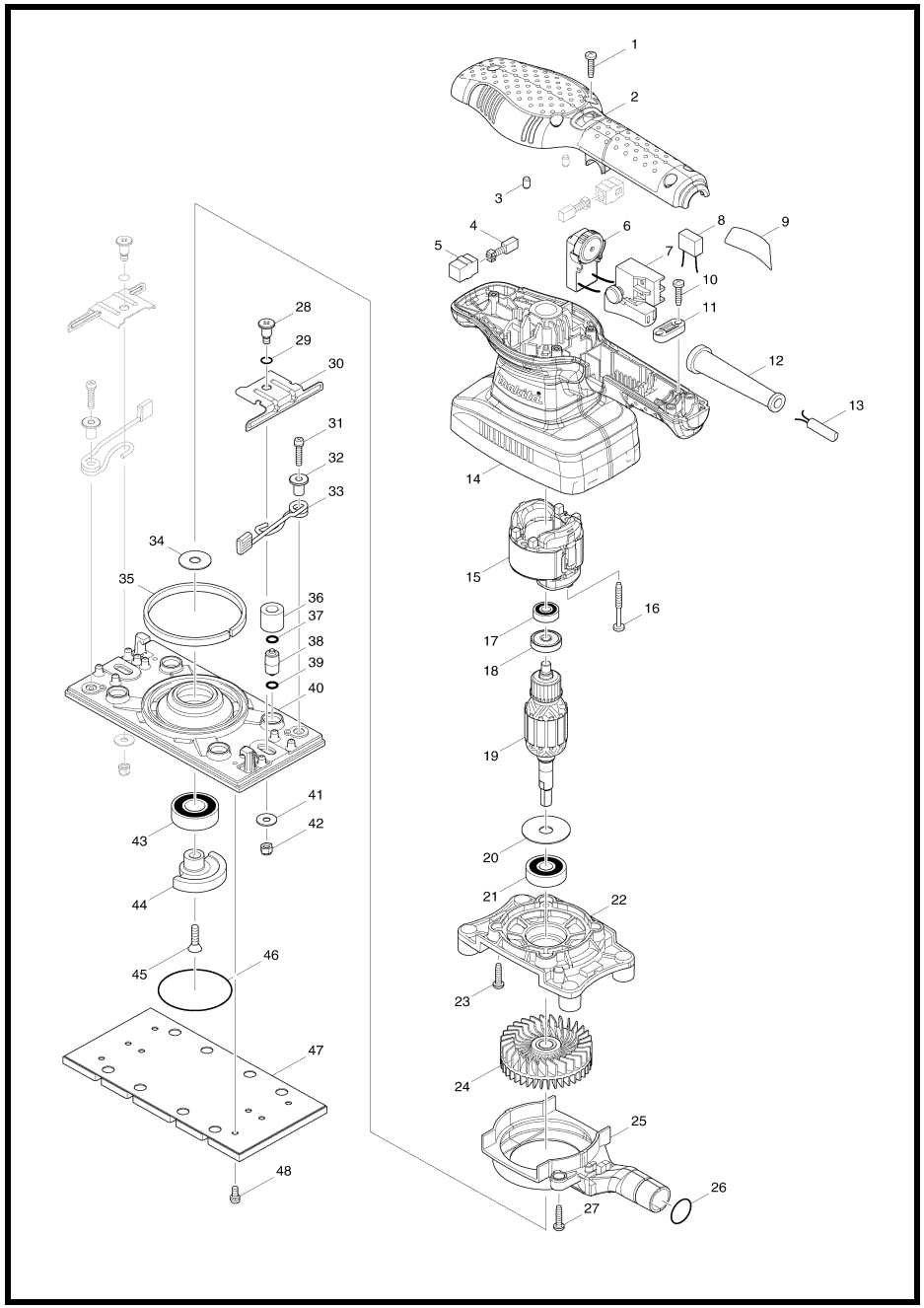

MODEL BO3711

ITEM	PARTS ID	DESCRIPTION	PRICE/BAHT
001	265995-6	TAPPING SCREW 4X18	40
002	451269-3	TOP COVER	340
003	263002-9	RUBBER PIN 4	30
004	B-80254	CARBON BRUSH SET CB-64A	
005	643552-4	BRUSH HOLDER 5-8	100
006	631906-7	CONTROLLER	1,140
007	651286-5	SWITCH SGEL206C-5	550
010	265995-6	TAPPING SCREW 4X18	40
011	687124-5	STRAIN RELIEF	70
012	682569-2	CORD GUARD 8-85	110
013	691055-2	POWER SUPPLY CORD 0.75-2-2.0	1,100
014	451270-8	MOTOR HOUSING	700
015	593708-8	FIELD ASSEMBLY 220-240V	
016	266048-4	TAPPING SCREW 4X40	60
017	210062-2	BALL BEARING 607ZZ	130
018	681652-2	INSULATION WASHER	60
019	515783-4	ARMATURE ASSEMBLY 220V	
020	253180-3	FLAT WASHER 10	80
021	211087-9	BALL BEARING 6200DDW	380
022	451266-9	BEARING BOX	170
023	265995-6	TAPPING SCREW 4X18	40
024	240117-9	FAN 68	
025	451267-7	FAN GUIDE	180
026	213315-8	O RING 19	50
027	265995-6	TAPPING SCREW 4X18	40
028	266511-7	+ FLAT FILLISTER HEAD SCREW M5	50
029	213045-1	O-RING 6	50
030	346102-1	PAPER CLAMP	100
031	911136-9	PAN HEAD SCREW M4X20	50
032	310300-3	SPRING GUIDE	60
033	162279-2	LEVER COMPLETE	160
034	267353-2	FLAT WASHER 8	50
035	423469-5	SPONGE 6X105X3	40
036	424056-3	SPONGE SLEEVE 9	50
037	213983-7	O RING 4	70
038	318151-8	FOOT	90
039	213983-7	O RING 4	70
040	318484-1	BASE	570
041	253807-5	FLAT WASHER 5	40
042	252103-8	HEX. LOCK NUT M5-8	110
043	211228-7	BALL BEARING 6202DDW	430
044	310301-1	BALANCER	290
045	912222-9	COUNTERSUNK HEAD SCREW M5X16	50
046	213656-2	O RING 53	80
047	140441-9	PAD COMPLETE	
048	911111-5	PAN HEAD SCREW M4X10	30
A01	135327-0	DUST BOX ASSEMBLY	680
A02	451271-6	PUNCH PLATE	170

SERVICE DRAWING

MODEL NO. BO4510

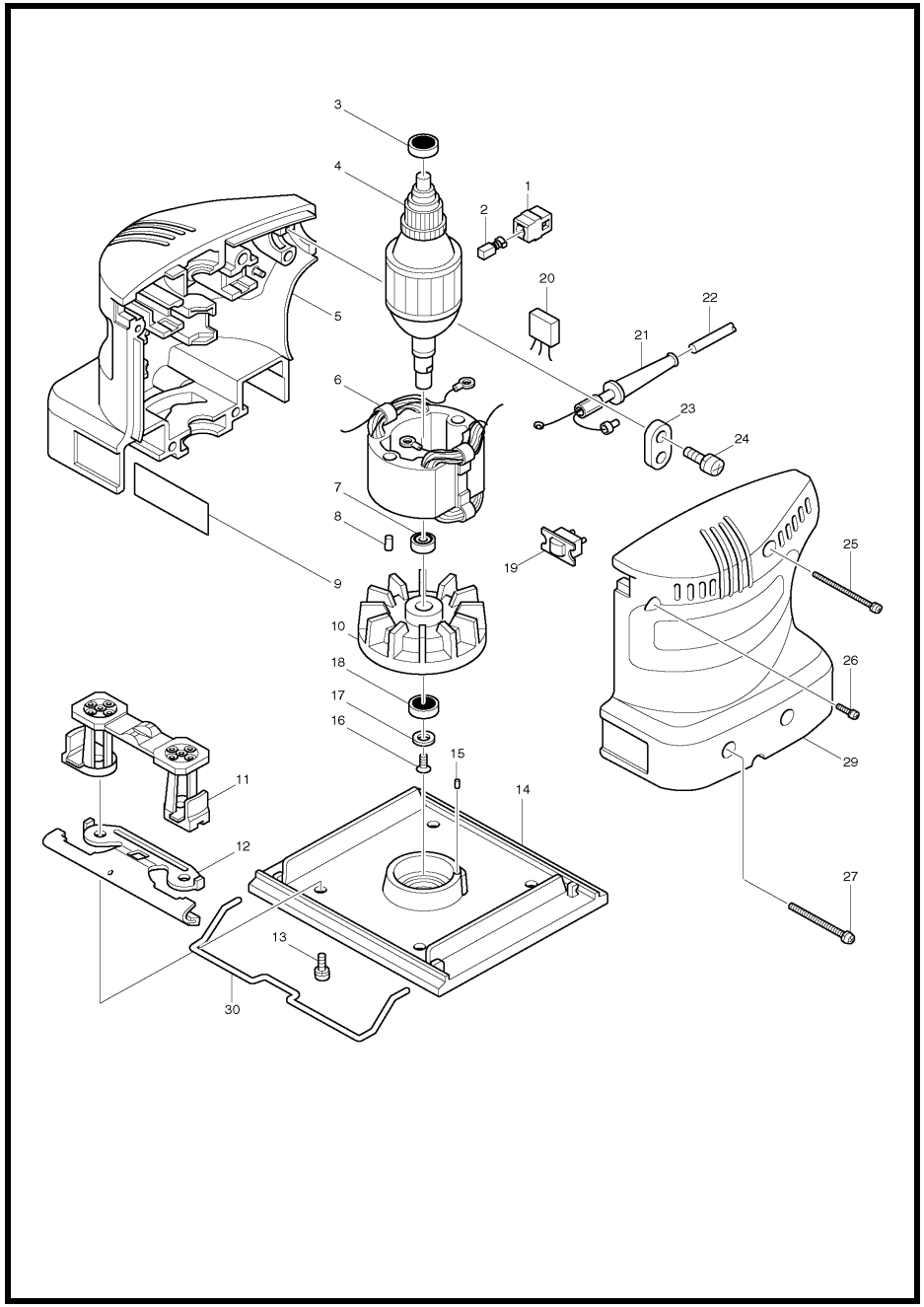

MODEL BO4510

ITEM	PARTS ID	DESCRIPTION	PRICE/BAHT
001	643552-4	BRUSH HOLDER 5-8	100
002	B-80254	CARBON BRUSH SET CB-64A	
003	210025-8	BALL BEARING 627LLB	250
004	510081-1	ARMATURE ASS'Y 220V	
005	181830-9	HOUSING SET	1,360
006	525108-4	FIELD ASS'Y 220V	
007	211092-6	BALL BEARING 629DDW	330
008	263002-9	RUBBER PIN 4	30
010	241652-0	FAN 65	450
011	410918-1	FOOT	230
012	155957-1	CLAMPER	290
013	911118-1	PAN HEAD SCREW M4X12	30
014	151232-3	BASE COMPLETE	660
015	263002-9	RUBBER PIN 4	30
016	912112-6	COUNTERSUNK HEAD SCREW M4X10	30
017	253825-3	FLAT WASHER 6	50
018	211066-7	BALL BEARING 6200LLB	410
019	651600-5	SWITCH SS106A	390
021	682504-0	CORD GUARD 10-85	190
022	691015-4	POWER SUPPLY CORD 0.75-2-2.5	740
023	687001-1	STRAIN RELIEF	50
024	911133-5	PAN HEAD SCREW M4X18	50
025	911188-0	PAN HEAD SCREW M4X60	80
026	911148-2	PAN HEAD SCREW M4X25	70
027	911198-7	PAN HEAD SCREW M4X70	80
029	181830-9	HOUSING SET	1,360
030	321869-2	LEVER	100
400	794195-6	ABRASIVE PAPER SET 114X100	160

SERVICE DRAWING

MODEL NO. BO4540

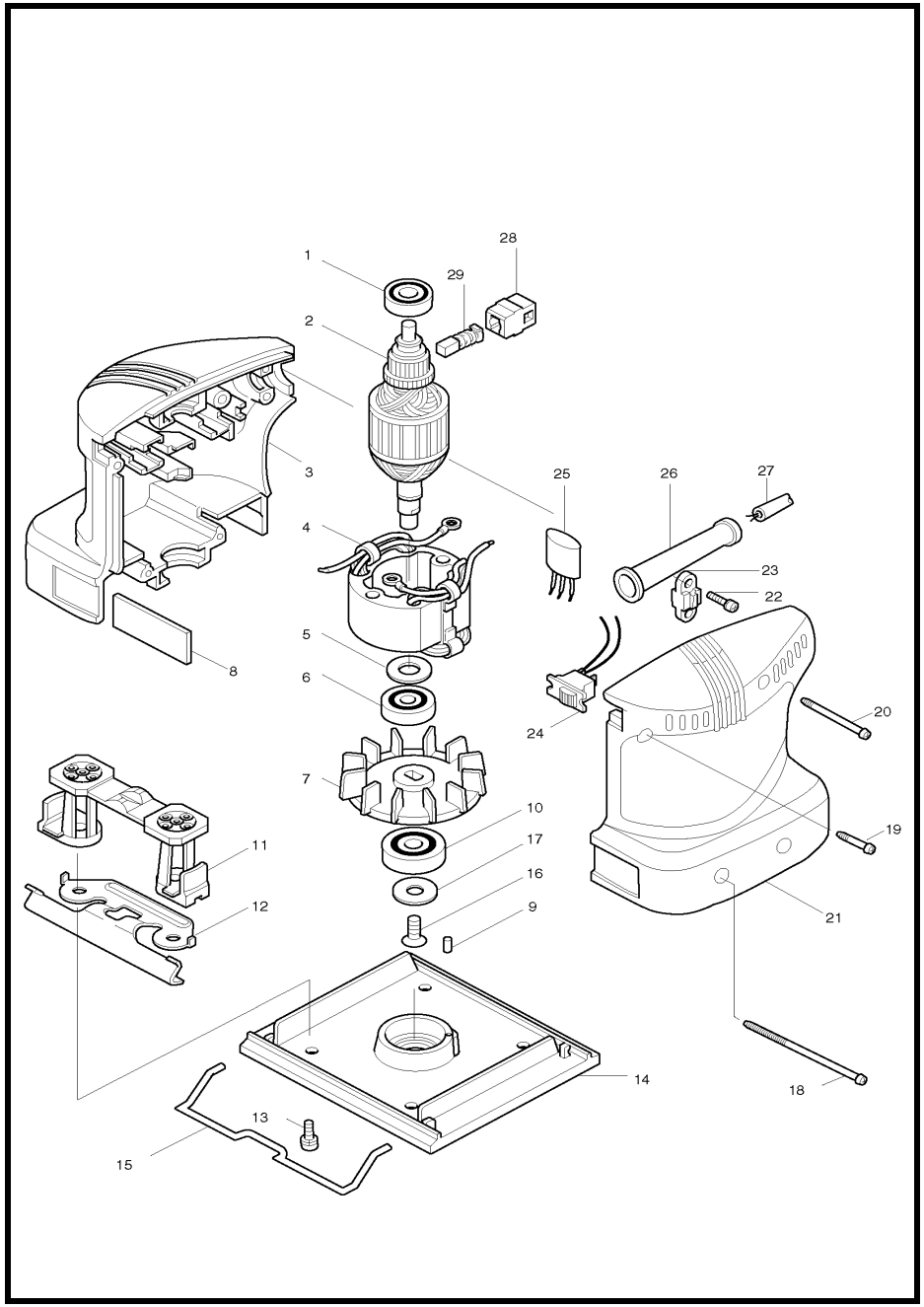

MODEL BO4540

ITEM	PARTS ID	DESCRIPTION	PRICE/BAHT
001	211016-2	BALL BEARING 626LLB	320
002	510076-4	ARMATURE ASS'Y 220V	
003	182630-0	HOUSING SET	1,330
004	593003-6	FIELD ASS'Y 220V	
005	253214-2	FLAT WASHER 9	80
006	211092-6	BALL BEARING 629DDW	330
007	241666-9	FAN 65	640
009	263002-9	RUBBER PIN 4	30
010	211066-7	BALL BEARING 6200LLB	410
011	410918-1	FOOT	230
012	153384-6	CLAMPER COMPLETE	490
013	911118-1	PAN HEAD SCREW M4X12	30
014	151232-3	BASE COMPLETE	660
015	321869-2	LEVER	100
016	912112-6	COUNTERSUNK HEAD SCREW M4X10	30
017	253825-3	FLAT WASHER 6	50
018	265872-2	TAPPING SCREW BT 4X50	50
019	265875-6	TAPPING SCREW BT 4X25	30
020	265876-4	TAPPING SCREW BT 4X40	40
021	182630-0	HOUSING SET	1,330
022	911133-5	PAN HEAD SCREW M4X18	50
023	687001-1	STRAIN RELIEF	50
024	651600-5	SWITCH SS106A	390
026	682502-4	CORD GUARD 8-85	110
027	691055-2	POWER SUPPLY CORD 0.75-2-2.0	1,100
028	643552-4	BRUSH HOLDER 5-8	100
029	B-80254	CARBON BRUSH SET CB-64A	
400	794195-6	ABRASIVE PAPER SET 114X100	160

SERVICE DRAWING

MODEL NO. BO4555

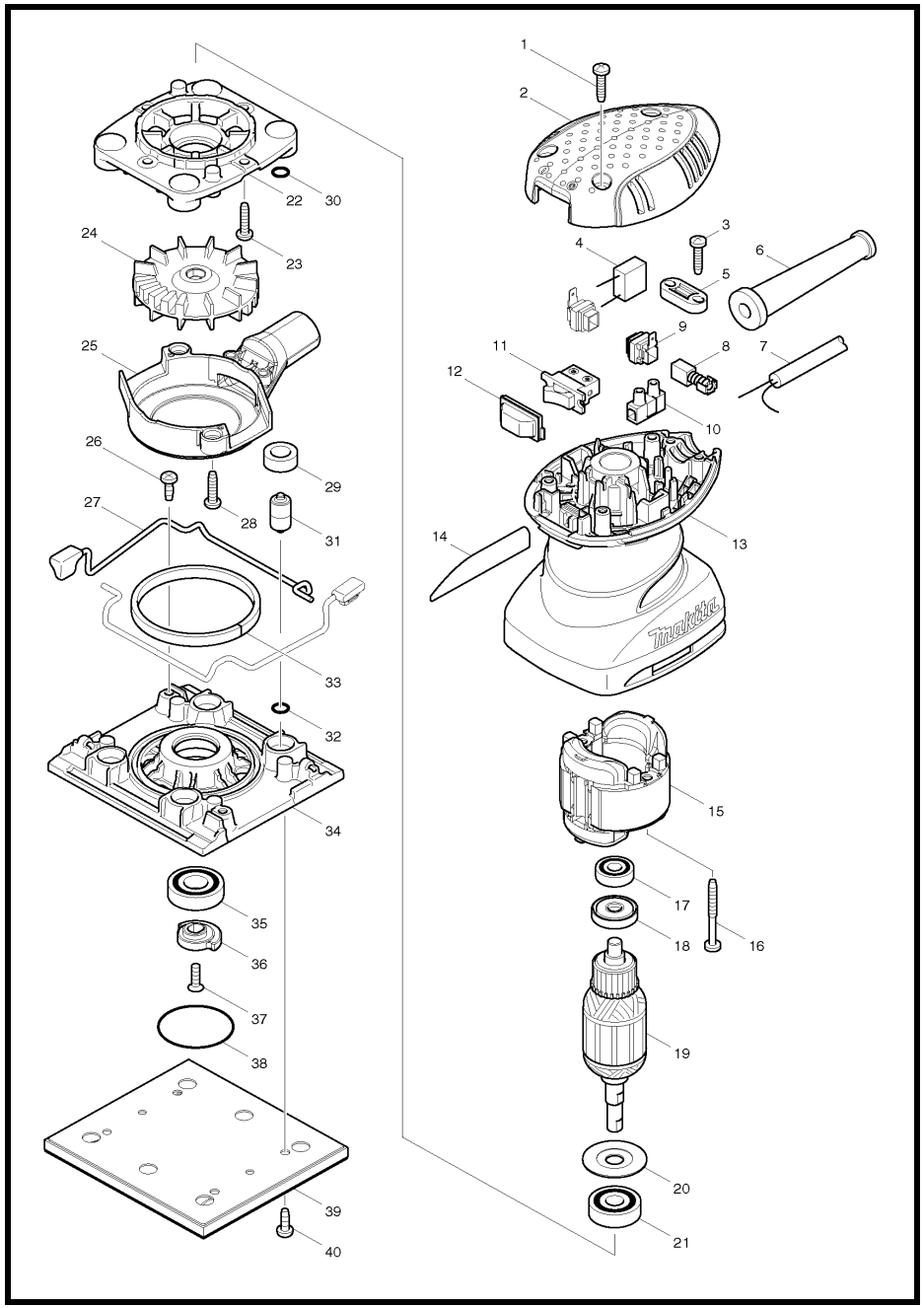

MODEL BO4555

ITEM	PARTS ID	DESCRIPTION	PRICE/BAHT
001	265995-6	TAPPING SCREW 4X18	40
002	450071-1	TOP COVER	380
003	265995-6	TAPPING SCREW 4X18	40
005	687124-5	STRAIN RELIEF	70
006	682569-2	CORD GUARD 8-85	110
007	691055-2	POWER SUPPLY CORD 0.75-2-2.0	1,100
008	B-80086	CARBON BRUSH SET CB-419A	
009	643995-0	BRUSH HOLDER	130
010	654532-5	TERMINAL BLOCK 1P	150
011	651527-9	SWITCH	220
012	424039-3	SWITCH COVER	110
013	450072-9	MOTOR HOUSING	820
015	593648-0	FIELD ASS'Y 220V	
016	266048-4	TAPPING SCREW 4X40	60
017	210034-7	BALL BEARING 607LLB	180
018	681652-2	INSULATION WASHER	60
019	515708-8	ARMATURE ASS'Y 220-240V	
020	267806-1	WASHER 9	70
021	211092-6	BALL BEARING 629DDW	330
022	450070-3	BEARING BOX	280
023	265995-6	TAPPING SCREW 4X18	40
024	241671-6	FAN 63	380
025	450069-8	FAN GUIDE	150
026	266020-6	TAPPING SCREW 4X12	50
027	162259-8	LEVER COMPLETE	170
028	265995-6	TAPPING SCREW 4X18	40
029	424023-8	SPONGE SLEEVE 9	70
030	213983-7	O RING 4	70
031	318151-8	FOOT	90
032	213983-7	O RING 4	70
033	424038-5	SPONGE 6X185X3	70
034	450067-2	BASE	330
035	211131-2	BALL BEARING 6001DDW	310
036	313141-6	BALANCER	110
037	912117-6	COUNTERSUNK HEAD SCREW M4X12	20
038	213510-0	O RING 36	70
039	158323-1	PAD COMPLETE	410
040	266020-6	TAPPING SCREW 4X12	50
A01	166078-4	DUST BAG	230
A02	257202-1	RING 25	290
A03	416063-0	DUST BAG NOZZLE	180
A04	416064-8	DUST NOZZLE	300
A05	192352-4	ABRASIVE PAPER SET	510
A06	450066-4	PUNCH PLATE	130

SERVICE DRAWING

MODEL NO. BO4558

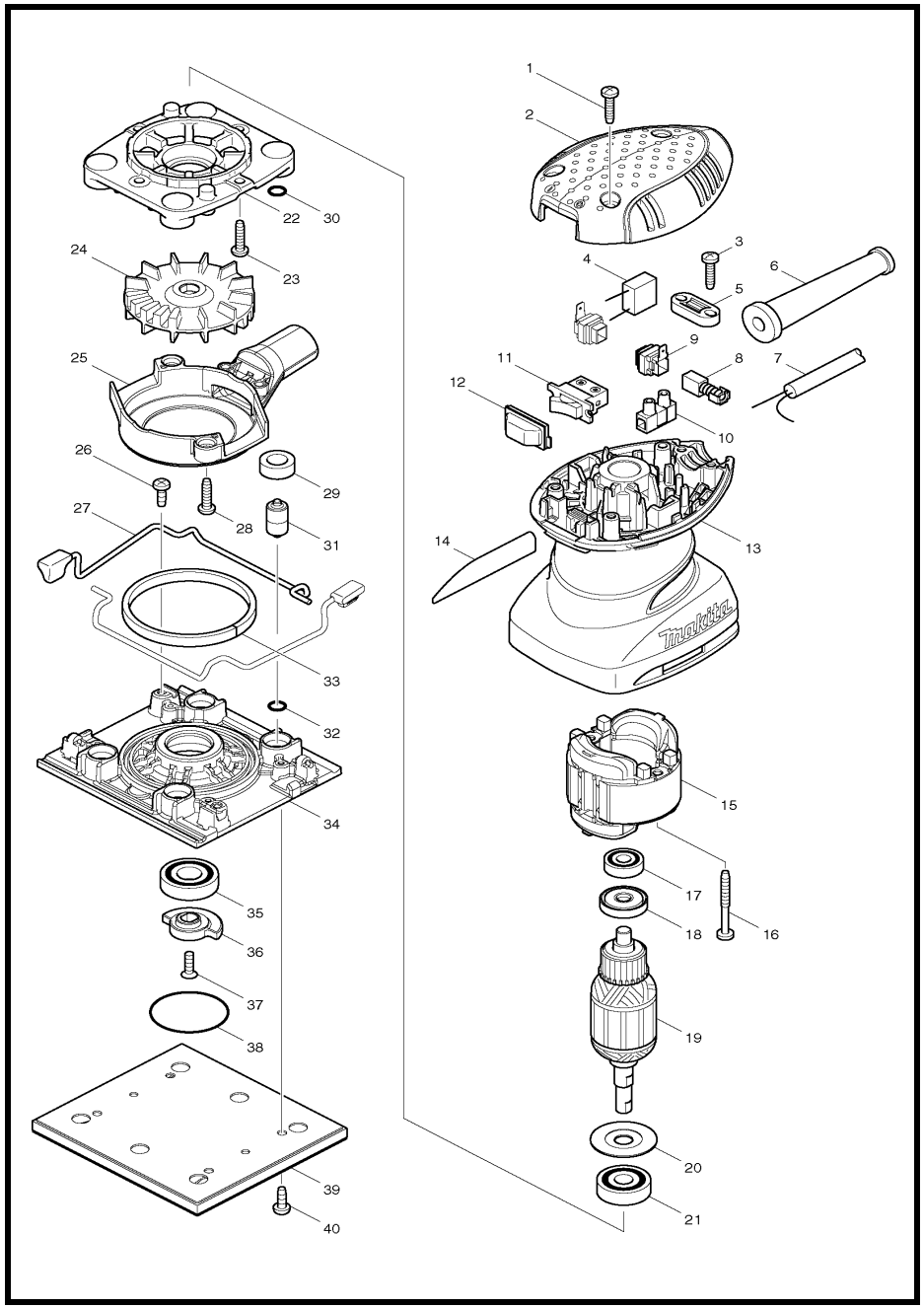

MODEL BO4558

ITEM	PARTS ID	DESCRIPTION	PRICE/BAHT
001	266326-2	TAPPING SCREW 4X18	30
002	450071-1	TOP COVER	380
003	266326-2	TAPPING SCREW 4X18	30
005	687124-5	STRAIN RELIEF	70
006	682569-2	CORD GUARD 8-85	110
007	691055-2	POWER SUPPLY CORD 0.75-2-2.0	1,100
008	B-80422	CARBON BRUSH SET CB-419A	
009	643995-0	BRUSH HOLDER	130
010	654532-5	TERMINAL BLOCK 1P	150
011	651527-9	SWITCH	220
012	424039-3	SWITCH COVER	110
013	450072-9	MOTOR HOUSING	820
015	593648-0	FIELD ASS'Y 220V	
016	266560-4	TAPPING SCREW 4X40	50
017	210034-7	BALL BEARING 607LLB	180
018	681652-2	INSULATION WASHER	60
019	515708-8	ARMATURE ASS'Y 220-240V	
020	267806-1	WASHER 9	70
021	211092-6	BALL BEARING 629DDW	330
022	450070-3	BEARING BOX	280
023	266326-2	TAPPING SCREW 4X18	30
024	241671-6	FAN 63	380
025	450069-8	FAN GUIDE	150
026	266026-4	TAPPING SCREW BIND CT 4X12	30
027	162299-6	LEVER COMPLETE	190
028	266326-2	TAPPING SCREW 4X18	30
029	424023-8	SPONGE SLEEVE 9	70
030	213983-7	O RING 4	70
031	318151-8	FOOT	90
032	213983-7	O RING 4	70
033	424038-5	SPONGE 6X185X3	70
034	318543-1	BASE	500
035	211131-2	BALL BEARING 6001DDW	310
036	313175-9	BALANCER	150
037	912117-6	COUNTERSUNK HEAD SCREW M4X12	20
038	213513-4	O RING 39	80
039	158324-9	PAD COMPLETE	310
040	911116-5	PAN HEAD SCREW M4X12	20
A01	135246-0	DUST BOX ASSEMBLY	410
A02	194746-9	PAPER DUST BAG SET	440
A03	794195-6	ABRASIVE PAPER SET 114X100	160
A04	450066-4	PUNCH PLATE	130

SERVICE DRAWING

MODEL NO. BO4565

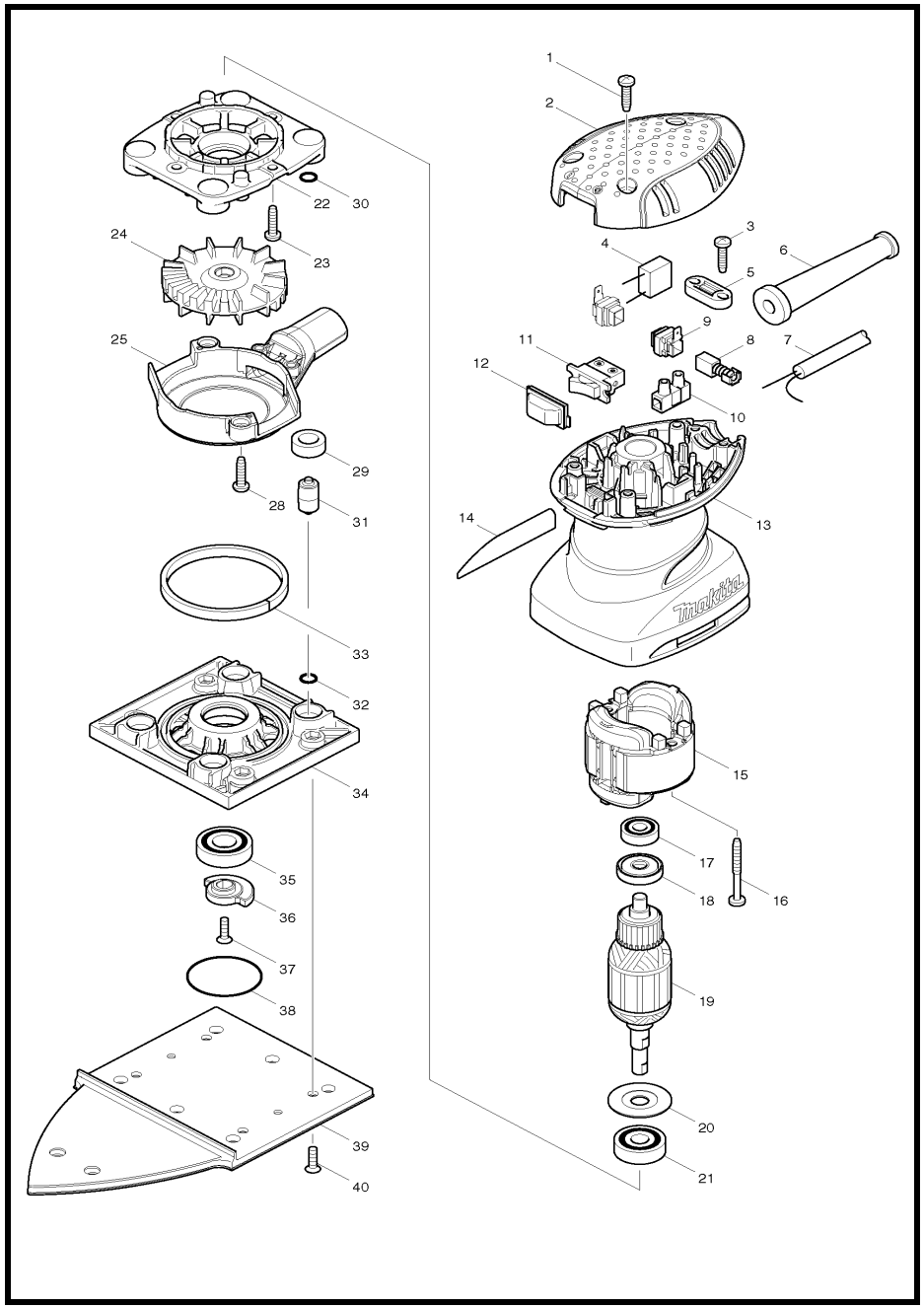

MODEL BO4565

ITEM	PARTS ID	DESCRIPTION	PRICE/BAHT
001	265995-6	TAPPING SCREW 4X18	40
002	450071-1	TOP COVER	380
003	265995-6	TAPPING SCREW 4X18	40
005	687124-5	STRAIN RELIEF	70
006	682569-2	CORD GUARD 8-85	110
007	691055-2	POWER SUPPLY CORD 0.75-2-2.0	1,100
008	B-80086	CARBON BRUSH SET CB-419A	
009	643995-0	BRUSH HOLDER	130
010	654532-5	TERMINAL BLOCK 1P	150
011	651527-9	SWITCH	220
012	424039-3	SWITCH COVER	110
013	450072-9	MOTOR HOUSING	820
014	863735-2	BO4565 NAME PLATE	80
015	593648-0	FIELD ASS'Y 220V	
016	266048-4	TAPPING SCREW 4X40	60
017	210034-7	BALL BEARING 607LLB	180
018	681652-2	INSULATION WASHER	60
019	515708-8	ARMATURE ASS'Y 220-240V	
020	267806-1	WASHER 9	70
021	211092-6	BALL BEARING 629DDW	330
022	450070-3	BEARING BOX	280
023	265995-6	TAPPING SCREW 4X18	40
024	241671-6	FAN 63	380
025	450069-8	FAN GUIDE	150
028	265995-6	TAPPING SCREW 4X18	40
029	424023-8	SPONGE SLEEVE 9	70
030	213983-7	O RING 4	70
031	318151-8	FOOT	90
032	213983-7	O RING 4	70
033	424038-5	SPONGE 6X185X3	70
034	450068-0	BASE	350
035	211131-2	BALL BEARING 6001DDW	310
036	313142-4	BALANCER	100
037	912117-6	COUNTERSUNK HEAD SCREW M4X12	20
038	213510-0	O RING 36	70
039	158325-7	PLATE COMPLETE	670
040	912117-6	COUNTERSUNK HEAD SCREW M4X12	20
A01	166078-4	DUST BAG	230
A02	257202-1	RING 25	290
A03	416063-0	DUST BAG NOZZLE	180
A04	416064-8	DUST NOZZLE	300
A05	192352-4	ABRASIVE PAPER SET	510
A06	192655-6	ABRASIVE PAPER SET	260

SERVICE DRAWING

MODEL NO. BO4566

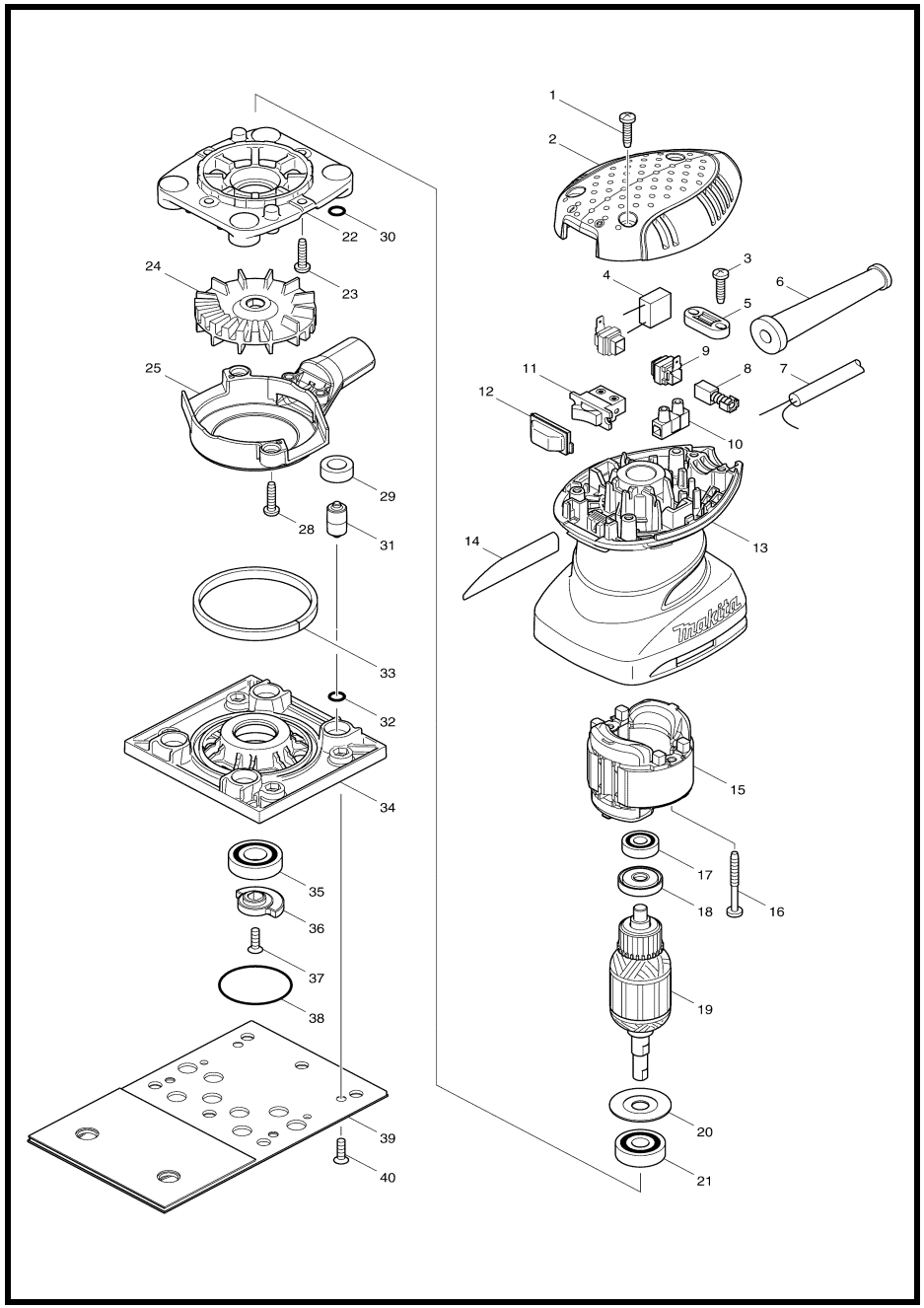

MODEL BO4566

ITEM	PARTS ID	DESCRIPTION	PRICE/BAHT
001	265995-6	TAPPING SCREW 4X18	40
002	450071-1	TOP COVER	380
003	265995-6	TAPPING SCREW 4X18	40
005	687124-5	STRAIN RELIEF	70
006	682569-2	CORD GUARD 8-85	110
007	691055-2	POWER SUPPLY CORD 0.75-2-2.0	1,100
008	B-80086	CARBON BRUSH SET CB-419A	
009	643995-0	BRUSH HOLDER	130
010	654532-5	TERMINAL BLOCK 1P	150
011	651527-9	SWITCH	220
012	424039-3	SWITCH COVER	110
013	450072-9	MOTOR HOUSING	820
014	863742-5	BO4566 NAME PLATE	80
015	593648-0	FIELD ASS'Y 220V	
016	266048-4	TAPPING SCREW 4X40	60
017	210034-7	BALL BEARING 607LLB	180
018	681652-2	INSULATION WASHER	60
019	515708-8	ARMATURE ASS'Y 220-240V	
020	267806-1	WASHER 9	70
021	211092-6	BALL BEARING 629DDW	330
022	450070-3	BEARING BOX	280
023	265995-6	TAPPING SCREW 4X18	40
024	241671-6	FAN 63	380
025	450069-8	FAN GUIDE	150
028	265995-6	TAPPING SCREW 4X18	40
029	424023-8	SPONGE SLEEVE 9	70
030	213983-7	O RING 4	70
031	318151-8	FOOT	90
032	213983-7	O RING 4	70
033	424038-5	SPONGE 6X185X3	70
034	450068-0	BASE	350
035	211131-2	BALL BEARING 6001DDW	310
036	313142-4	BALANCER	100
037	912117-6	COUNTERSUNK HEAD SCREW M4X12	20
038	213510-0	O RING 36	70
039	158326-5	PLATE COMPLETE	540
040	912117-6	COUNTERSUNK HEAD SCREW M4X12	20
A01	166078-4	DUST BAG	230
A02	257202-1	RING 25	290
A03	416063-0	DUST BAG NOZZLE	180
A04	416064-8	DUST NOZZLE	300

SERVICE DRAWING

MODEL NO. BO4901

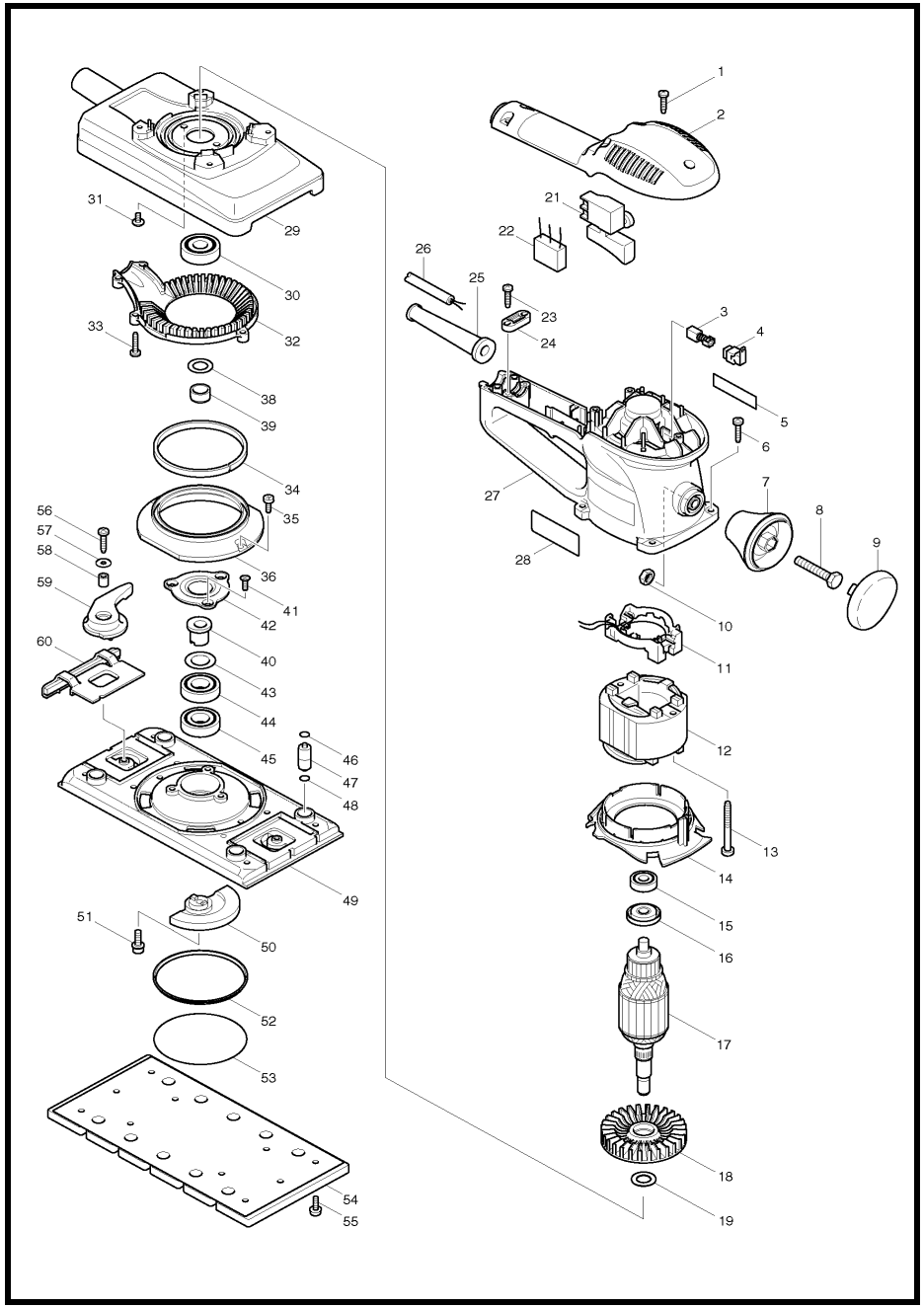

MODEL BO4901

ITEM	PARTS ID	DESCRIPTION	PRICE/BAHT
001	265995-6	TAPPING SCREW 4X18	40
002	417779-0	TOP COVER	560
003	B-80086	CARBON BRUSH SET CB-419A	
004	643923-5	BRUSH HOLDER	130
006	266042-6	TAPPING SCREW BIND CT 4X20	50
007	417774-0	KNOB	190
008	921467-8	HEX. BOLT M8X45	80
009	417775-8	KNOB COVER	160
010	931403-6	HEX. NUT M8	50
011	638134-5	SUPPORT COMPLETE	390
012	634463-4	FIELD 220V	
013	266046-8	TAPPING SCREW 5X50	100
014	417777-4	BAFFLE PLATE	160
015	210005-4	BALL BEARING 608DDW	240
016	681644-1	INSULATION WASHER	60
017	513503-0	ARMATURE ASS'Y 220V	
019	253744-3	FLAT WASHER 12	50
021	651286-5	SWITCH SGEL206C-5	550
023	265995-6	TAPPING SCREW 4X18	40
024	687053-2	STRAIN RELIEF	70
025	682504-0	CORD GUARD 10-85	190
026	691015-4	POWER SUPPLY CORD 0.75-2-2.5	740
027	183419-9	MOTOR HOUSING	1,080
029	317538-1	FRAME	1,840
030	211129-9	BALL BEARING 6201DDW	300
031	251291-8	+ SCREW M4X8	30
032	417782-1	SCROLL COVER	290
033	266042-6	TAPPING SCREW BIND CT 4X20	50
034	443108-1	FELT 6X225X3	120
035	266026-4	TAPPING SCREW BIND CT 4X12	30
036	417772-4	DUST GUIDE	210
038	267212-0	FLAT WASHER 12	30
039	214109-4	PLANE BEARING 12	140
040	313104-2	SLEEVE	100
041	266058-1	TAPPING SCREW CT 4X12	20
042	162171-2	BEARING RETAINER 24	360
043	253315-6	THIN WASHER 15	80
044	211201-7	BALL BEARING 6002LLB	560
045	211201-7	BALL BEARING 6002LLB	560
046	213047-7	O RING 4	100
047	317535-7	FOOT	100
048	213047-7	O RING 4	100
049	317537-3	BASE	1,640
050	317536-5	BALANCER	400
051	266071-9	HEX. SOCKET HEAD BOLT M5X16	100
052	345211-3	UNDER COVER	160
053	213755-0	O RING 75	120
054	193523-6	PAD	930
055	911118-1	PAN HEAD SCREW M4X12	30
056	266042-6	TAPPING SCREW BIND CT 4X20	50
057	253874-0	FLAT WASHER 4	60
058	257659-6	SLEEVE 4	120
059	153361-8	CLAMP LEVER COMPLETE	230
060	153362-6	PAPER CLAMP COMPLETE	430

SERVICE DRAWING

MODEL NO. BO5010

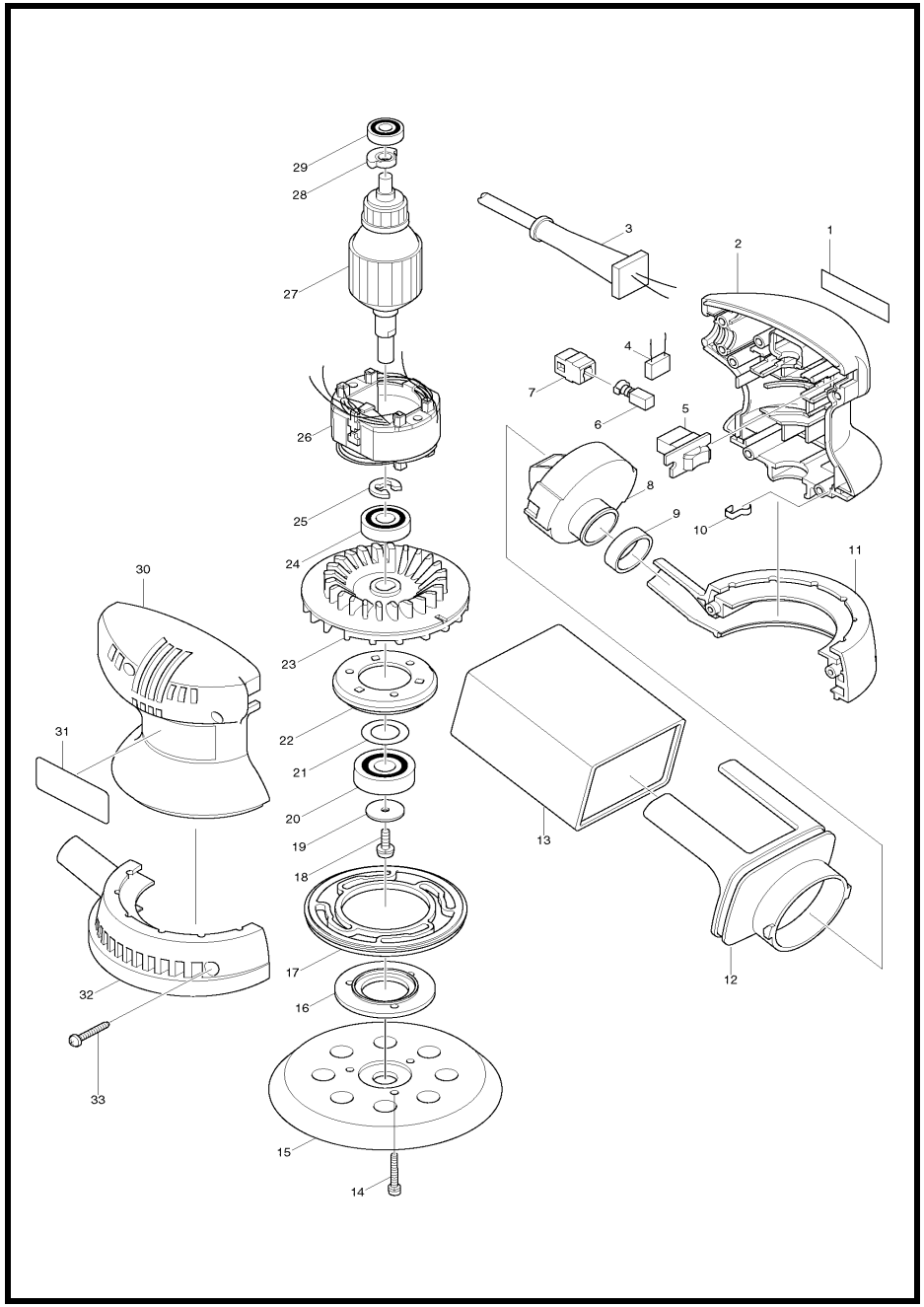

MODEL BO5010

ITEM	PARTS ID	DESCRIPTION	PRICE/BAHT
001	819063-3	MAKITA LABEL	30
002	183048-8	MOTOR HOUSING SET	1,260
003	691055-2	POWER SUPPLY CORD 0.75-2-2.0	1,100
005	651527-9	SWITCH	220
006	B-80254	CARBON BRUSH SET CB-64A	
007	643552-4	BRUSH HOLDER 5-8	100
008	416064-8	DUST NOZZLE	300
009	257202-1	RING 25	290
010	213755-0	O RING 75	120
011	183088-6	SKIRT SET	620
012	416063-0	DUST BAG NOZZLE	180
013	166078-4	DUST BAG	230
014	911128-8	PAN HEAD SCREW M4X16	30
015	743081-8	PAD 123	900
016	316834-4	BEARING BOX COVER	250
017	421866-9	BRAKE RING	470
018	911116-5	PAN HEAD SCREW M4X12	20
019	253739-6	FLAT WASHER 4	80
020	211236-8	BALL BEARING 6002DDW	550
021	253315-6	THIN WASHER 15	80
022	316835-2	BEARING BOX	700
024	210020-8	BALL BEARING 6000LLU	360
025	961015-1	STOP RING E-9	40
026	593378-3	FIELD ASS'Y 220-240V	
027	517233-5	ARMATURE ASS'Y 220-240V	
028	313080-0	COUNTER WEIGHT	190
029	210017-7	BALL BEARING 607DDW	250
030	183048-8	MOTOR HOUSING SET	1,260
032	183088-6	SKIRT SET	620
033	265995-6	TAPPING SCREW 4X18	40
A01	794544-7	ABRASIVE DISC 125 #120	910
E02	265995-6	TAPPING SCREW 4X18	40
E03	682502-4	CORD GUARD 8-85	110
E04	687052-4	STRAIN RELIEF	80

SERVICE DRAWING

MODEL NO. BTD146

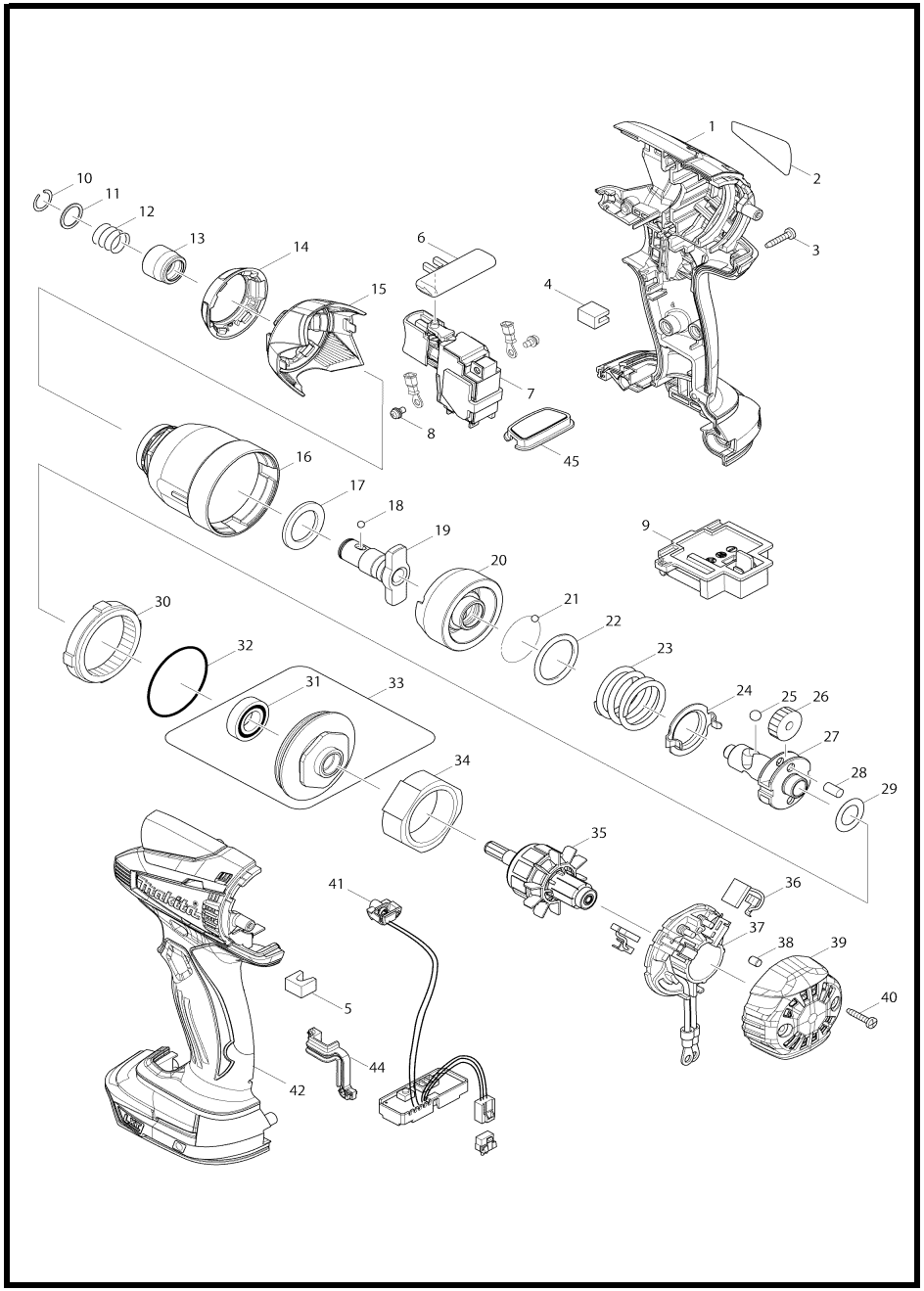

MODEL BTD146

ITEM	PARTS ID	DESCRIPTION	PRICE/BAHT
001	187116-9	HOUSING SET	990
003	266429-2	TAPPING SCREW 3X16	50
004	423423-9	SPONGE B	40
005	423422-1	SPONGE A	40
006	419041-9	F/R CHANGE LEVER	100
007	650241-4	SWITCH TG573FSB-1	
008	652045-0	+PAN HEAD SCREW M3.5X5	50
009	643852-2	TERMINAL	360
010	231951-8	RING SPRING 11	50
011	267085-1	FLAT WASHER 12	100
012	233005-7	COMPRESSION SPRING 13	60
013	326068-1	BIT SLEEVE	190
014	424429-0	BUMPER	120
015	452837-5	HAMMER CASE COVER	90
016	140946-9	HAMMER CASE COMPLETE	690
017	261151-6	NYLON WASHER 19	50
018	216001-0	STEEL BALL 3.5	20
019	326067-3	ANVIL N	1,320
020	326054-2	HAMMER	670
021	216001-0	STEEL BALL 3.5	20
022	267175-0	FLAT WASHER 24	60
023	233430-2	COMPRESSION SPRING 24	160
024	346466-3	PLATE	70
025	216011-7	STEEL BALL 5.6	20
026	227233-4	SPUR GEAR 22	280
027	326066-5	SPINDLE	1,030
028	256253-1	PIN 5	60
029	253362-7	THIN WASHER 12	40
030	227150-8	INTERNAL GEAR 51	250
031	211140-1	BALL BEARING 6901LLB	440
032	213507-9	O RING 40	70
033	158145-9	BEARING BOX COMPLETE	850
034	638396-5	YOKE UNIT	1,000
035	619247-1	ARMATURE	
036	195021-6	CARBON BRUSH CB-440	
037	638387-6	BRUSH HOLDER COMPLETE	290
038	263032-0	RUBBER PIN 4	50
039	452832-5	REAR COVER	170
040	266429-2	TAPPING SCREW 3X16	50
041	620052-1	LIGHT CIRCUIT	910
042	187116-9	HOUSING SET	990
044	424430-5	SEAL	60
045	140963-9	SWITCH PLATE COMPLETE	100
A01	266622-8	+ TRUSS HEAD SCREW M4X12	60
A02	346449-3	HOOK	170
A02	346317-0	HOOK	160
A03	450128-8	BATTERY COVER	70
A04	***DC18RC	DC18RC FAST CHARGER	5,700
A05	194204-5	BATTERY BL1830 SET	12,940
A05	194513-2	BATTERY BL1815 SET	7,840

SERVICE DRAWING

MODEL NO. BTW251

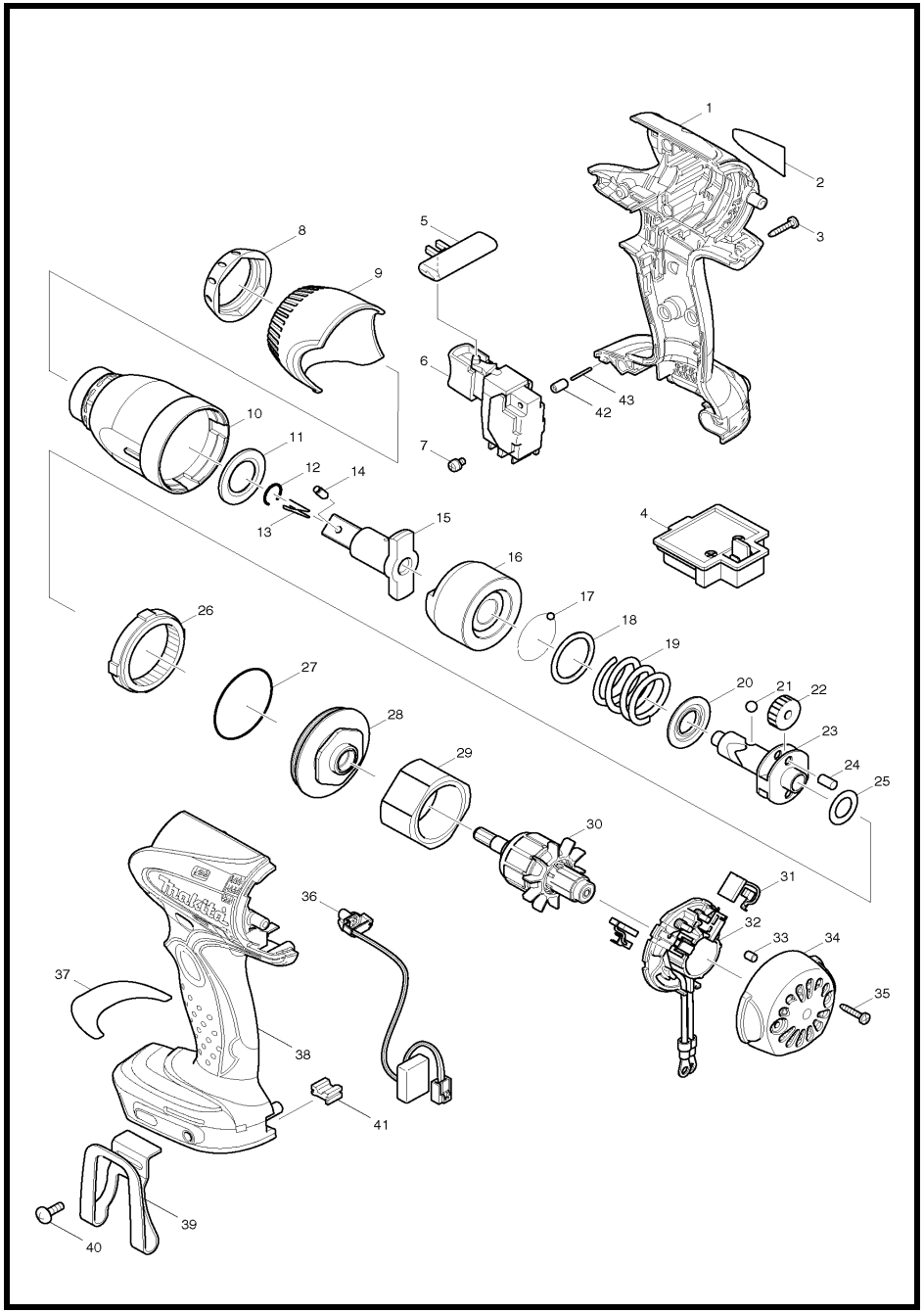

MODEL BTW251

ITEM	PARTS ID	DESCRIPTION	PRICE/BAHT
001	188243-5	HOUSING SET	3,420
003	266130-9	TAPPING SCREW BIND PT 3X16	30
004	643852-2	TERMINAL	360
005	419041-9	F/R CHANGE LEVER	100
006	650652-3	SWITCH TG553FSB-1B	2,020
007	652045-0	+PAN HEAD SCREW M3.5X5	50
008	424375-7	BUMPER	220
009	452439-7	HAMMER CASE COVER	390
010	140171-2	HAMMER CASE COMPLETE	1,790
011	261116-8	NYLON WASHER 18	120
012	231907-1	RING SPRING 10	50
015	324706-9	ANVIL	2,350
016	324703-5	HAMMER	1,060
017	216001-0	STEEL BALL 3.5	20
018	267175-0	FLAT WASHER 24	60
019	234223-0	COMPRESSION SPRING 25	
020	267766-7	CUP WASHER 14	110
021	216011-7	STEEL BALL 5.6	20
022	227233-4	SPUR GEAR 22	280
023	324220-5	SPINDLE	1,310
024	256253-1	PIN 5	60
025	267212-0	FLAT WASHER 12	30
026	227150-8	INTERNAL GEAR 51	250
027	213507-9	O RING 40	70
028	158145-9	BEARING BOX COMPLETE	850
029	638495-3	YORK UNIT	1,210
030	619253-6	ARMATURE	
031	195021-6	CARBON BRUSH CB-440	
032	638498-7	BRUSH HOLDER COMPLETE	230
033	263032-0	RUBBER PIN 4	50
034	418981-8	REAR COVER	550
035	266130-9	TAPPING SCREW BIND PT 3X16	30
036	631693-8	LIGHT CIRCUIT	700
038	188243-5	HOUSING SET	3,420
039	346449-3	HOOK	170
040	251314-2	+ SCREW M4X12	40
041	424026-2	CUSHION	170
042	263036-2	RUBBER PIN 5	120
043	268184-2	PIN 1.5	50
A01	***DC18RC	DC18RC FAST CHARGER	5,700
A02	196013-8	BATTERY BL1815 SET	6,970
A05	450128-8	BATTERY COVER	70

SERVICE DRAWING

MODEL NO. CC300D

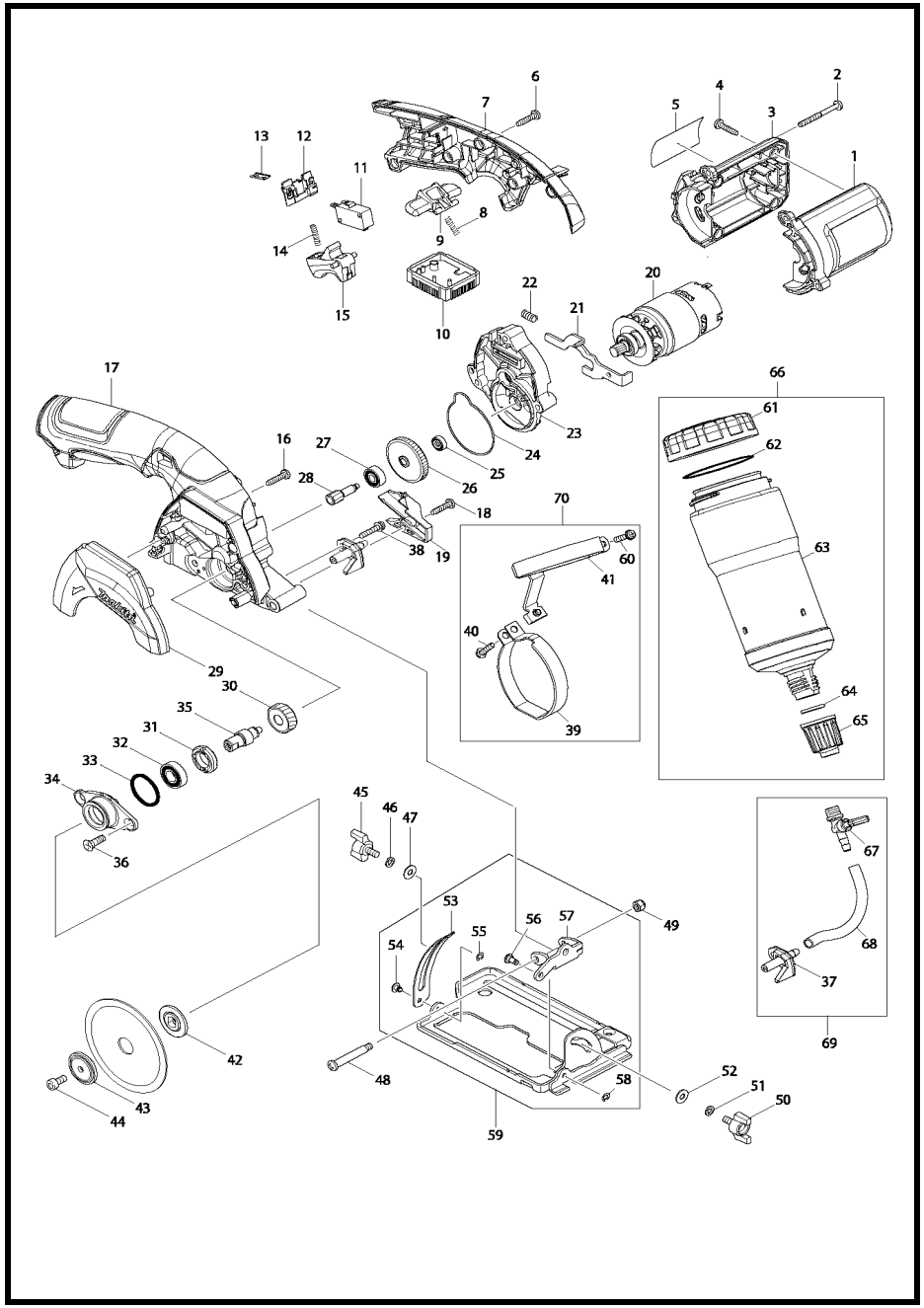

MODEL CC300D

ITEM	PARTS ID	DESCRIPTION	PRICE/BAHT
001	188941-1	MOTOR HOUSING SET	290
002	266560-4	TAPPING SCREW 4X40	50
003	188941-1	MOTOR HOUSING SET	290
004	265995-6	TAPPING SCREW 4X18	40
006	265995-6	TAPPING SCREW 4X18	40
007	263002-9	RUBBER PIN 4	30
007	187282-2	HANDLE SET	820
008	231469-9	COMPRESSION SPRING 4	60
009	419664-3	LOCK OFF LEVER	130
010	638892-3	CONTROLLER UNIT	2,160
011	651891-8	SWITCH V-15-3A6 SINGLE	360
012	643830-2	TERMINAL	130
013	345998-7	SET PLATE	50
014	231469-9	COMPRESSION SPRING 4	60
015	419665-1	SWITCH LEVER	130
016	265995-6	TAPPING SCREW 4X18	40
017	263002-9	RUBBER PIN 4	30
017	187282-2	HANDLE SET	820
018	265995-6	TAPPING SCREW 4X18	40
019	452234-5	DUCT	110
020	629885-1	DC MOTOR	1,940
021	346337-4	SHAFT LOCK	110
022	233117-6	COMPRESSION SPRING 6	50
023	140625-9	GEAR HOUSING COMPLETE	190
024	424358-7	PACKING	90
025	210036-3	BALL BEARING 604ZZ	230
026	227737-6	HELICAL GEAR 47	310
027	210028-2	BALL BEARING 606ZZ	130
028	227735-0	HELICAL GEAR 9B	250
029	452243-4	BLADE COVER	160
030	227736-8	HERICAL GEAR 28	230
031	285847-5	BEARING RETAINER 14-23	290
032	210069-8	BALL BEARING 6900DDW	350
033	213435-8	O RING 26	60
034	318660-7	BEARING BOX	230
035	325983-6	SPINDLE	200
036	265034-2	COUNTERSUNK HEAD SCREW M5X16	60
037	453555-8	NOZZLE	150
038	911138-5	PAN HEAD SCREW M4X20	50
039	346578-2	BAND B	180
040	911138-5	PAN HEAD SCREW M4X20	50
041	346579-0	TANK HOLDER	290
042	224435-3	INNER FLANGE 28	190
043	224177-9	OUTER FLANGE 28	160
044	922212-4	HEX. SOCKET HEAD BOLT M5X12	30
045	265760-3	THUMB SCREW M5X10	100
046	942101-7	SPRING WASHER 5	100
047	941101-4	FLAT WASHER 5	20
048	265056-2	+ PAN HEAD SCREW K4	170
049	252103-8	HEX. LOCK NUT M5-8	110
050	265760-3	THUMB SCREW M5X10	100
051	942101-7	SPRING WASHER 5	100
052	941101-4	FLAT WASHER 5	20
053	346587-1	DEPTH GUIDE	140
054	268004-0	PIN 4	120
055	961017-7	STOP RING E-3	20
056	268028-6	PIN 5	110
057	346586-3	ANGULAR GUIDE	190
058	961017-7	STOP RING E-3	20
059	135503-6	BASE ASS'Y	840
060	911138-5	PAN HEAD SCREW M4X20	50
061	453557-4	CAP B	180
062	213605-9	O RING 50	80
063	453556-6	WATER SUPPLY TANK	200
064	261056-0	RUBBER WASHER 12	70
065	453554-0	CAP A	160
066	187277-5	WATER SUPPLY TANK SET	490
067	152536-6	WATER SUPPLY COCK COMPLETE	290
068	412107-4	VINYL TUBE 5	60
069	187278-3	WATER SUPPLY COCK SET	470
070	187276-7	TANK HOLDER SET	430
A01	783202-0	HEX. WRENCH 4	70
A02	B-21082	DIAMOND WHEEL 85MM RIM WET FOF	2,290

SERVICE DRAWING

MODEL NO. DA3000R

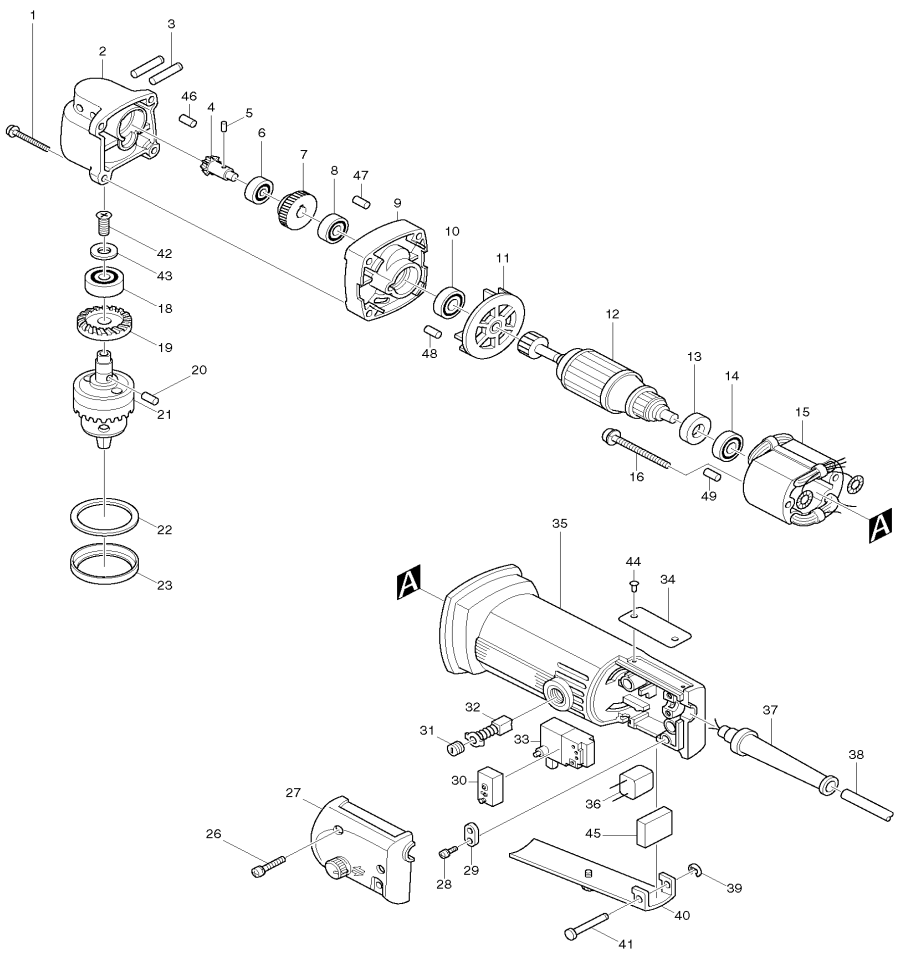

MODEL DA3000R

ITEM	PARTS ID	DESCRIPTION	PRICE/BAHT
001	911161-0	PAN HEAD SCREW M4X35	30
002	159272-5	GEAR HOUSING	1,460
003	256745-0	PIN 4	100
004	226751-9	SPIRAL BEVEL GEAR 7	1,090
005	256014-9	PIN 3	50
006	211051-0	BALL BEARING 609LLB	240
007	221682-7	HELICAL GEAR 32	750
008	211014-6	BALL BEARING 606	340
009	156951-6	GEAR HOUSING COVER	760
010	211033-2	BALL BEARING 608LB	200
012	511823-6	ARMATURE ASS'Y 220V	
013	681614-0	INSULATION WASHER	80
014	211028-5	BALL BEARING 627LB	290
015	521478-9	FIELD ASS'Y 220V	
016	266147-2	TAPPING SCREW 4X55	100
018	211051-0	BALL BEARING 609LLB	240
019	226752-7	SPIRAL BEVEL GEAR 24	1,490
020	256023-8	PIN 5	80
021	193442-6	DRILL CHUCK	3,480
022	443049-1	FELT RING 38	100
023	286216-3	CAP 46	160
026	911168-6	PAN HEAD SCREW M4X40	40
027	155502-2	SWITCH COVER COMPLETE	490
028	911133-5	PAN HEAD SCREW M4X18	50
029	687001-1	STRAIN RELIEF	50
030	650527-6	SWITCH TG833R-1	720
031	643550-8	BRUSH HOLDER CAP 5-8	100
032	B-80260	CARBON BRUSH SET CB-65A	
033	651937-0	SWITCH	2,630
035	157722-4	MOTOR HOUSING	1,860
037	682500-8	CORD GUARD 8.5-72	120
038	691055-2	POWER SUPPLY CORD 0.75-2-2.0	1,100
039	961017-7	STOP RING E-3	20
040	158011-0	SWITCH LEVER	450
041	256626-8	PIN 4	150
042	251304-5	+ COUNTERSUNK HEAD SCREW M4X1	50
043	253969-9	WASHER 4	80
044	953106-2	RIVET 0-5	20
046	263002-9	RUBBER PIN 4	30
047	263002-9	RUBBER PIN 4	30
048	263002-9	RUBBER PIN 4	30
049	263002-9	RUBBER PIN 4	30
400	763414-1	CHUCK KEY S10	230
401	411780-7	KEY HOLDER 10	50

SERVICE DRAWING

MODEL NO. DA3000V

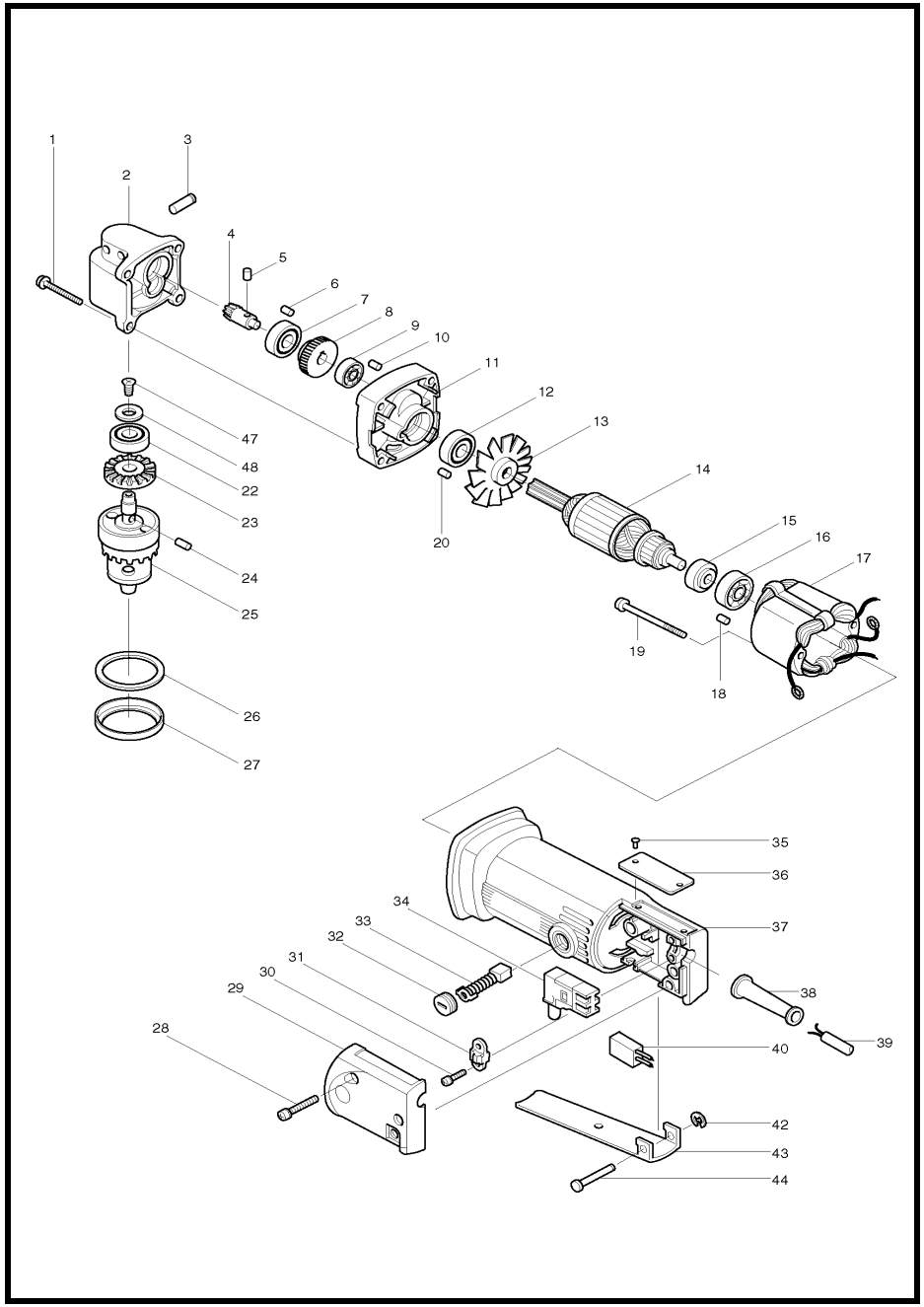

MODEL DA3000V

ITEM	PARTS ID	DESCRIPTION	PRICE/BAHT
001	911161-0	PAN HEAD SCREW M4X35	30
002	159272-5	GEAR HOUSING	1,460
003	256745-0	PIN 4	100
004	226751-9	SPIRAL BEVEL GEAR 7	1,090
005	256014-9	PIN 3	50
006	263002-9	RUBBER PIN 4	30
007	211051-0	BALL BEARING 609LLB	240
008	221682-7	HELICAL GEAR 32	750
009	211014-6	BALL BEARING 606	340
010	263002-9	RUBBER PIN 4	30
011	156951-6	GEAR HOUSING COVER	760
012	211033-2	BALL BEARING 608LB	200
013	241081-7	FAN 58	290
014	511818-9	ARMATURE ASS'Y 220V	
015	681614-0	INSULATION WASHER	80
016	211028-5	BALL BEARING 627LB	290
017	521418-7	FIELD ASS'Y 220V	
018	263002-9	RUBBER PIN 4	30
019	266147-2	TAPPING SCREW 4X55	100
020	263002-9	RUBBER PIN 4	30
022	211051-0	BALL BEARING 609LLB	240
023	226752-7	SPIRAL BEVEL GEAR 24	1,490
024	256023-8	PIN 5	80
025	193442-6	DRILL CHUCK	3,480
026	443049-1	FELT RING 38	100
027	286216-3	CAP 46	160
028	911158-9	PAN HEAD SCREW M4X30	30
029	411898-4	SWITCH COVER	390
030	911133-5	PAN HEAD SCREW M4X18	50
031	687001-1	STRAIN RELIEF	50
032	643550-8	BRUSH HOLDER CAP 5-8	100
033	B-80260	CARBON BRUSH SET CB-65A	
034	651919-2	SWITCH SGE106CV-1P	1,650
037	157722-4	MOTOR HOUSING	1,860
038	682500-8	CORD GUARD 8.5-72	120
039	691055-2	POWER SUPPLY CORD 0.75-2-2.0	1,100
042	961017-7	STOP RING E-3	20
043	158011-0	SWITCH LEVER	450
044	256626-8	PIN 4	150
047	251304-5	+ COUNTERSUNK HEAD SCREW M4X1	50
048	253969-9	WASHER 4	80
400	763414-1	CHUCK KEY S10	230
401	411780-7	KEY HOLDER 10	50
402	B-80260	CARBON BRUSH SET CB-65A	

SERVICE DRAWING

MODEL NO. DA3010

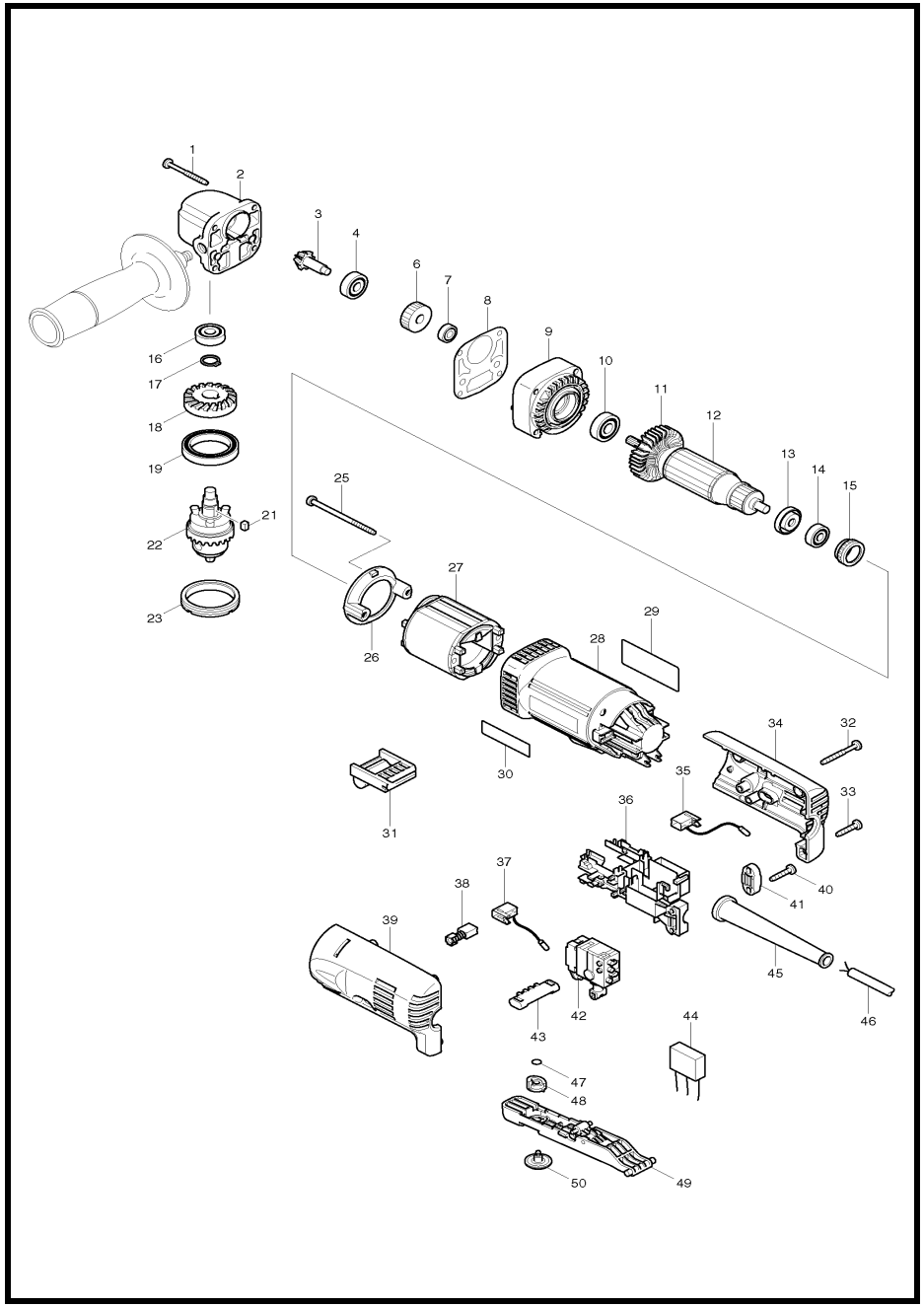

MODEL DA3010

ITEM	PARTS ID	DESCRIPTION	PRICE/BAHT
001	266048-4	TAPPING SCREW 4X40	60
002	317635-3	GEAR HOUSING	1,650
003	227436-0	SPIRAL BEVEL GEAR 9	660
004	210029-0	BALL BEARING 608ZZ	130
006	226567-2	HELICAL GEAR 28	410
007	210026-6	BALL BEARING 696ZZ	230
008	418036-9	GASKET	170
009	418042-4	GEAR HOUSING COVER	270
010	211051-0	BALL BEARING 609LLB	240
012	517583-8	ARMATURE ASS'Y 220-240V	
013	681636-0	INSULATION WASHER	60
014	211021-9	BALL BEARING 607LLB	240
015	421494-0	RUBBER RING 19	250
016	210029-0	BALL BEARING 608ZZ	130
017	961052-5	RETAINING RING S-12	40
018	227437-8	SPIRAL BEVEL GEAR 26	1,190
019	211423-9	BALL BEARING 6806DDW	320
021	254201-4	KEY 4	80
022	763174-5	DRILL CHUCK S10	2,740
023	285842-5	BEARING RETAINER 36-43	230
025	266315-7	TAPPING SCREW MT 4X65	80
026	418033-5	BAFFLE PLATE	150
027	635078-0	FIELD	
028	183560-8	MOTOR HOUSING	760
031	418039-3	COVER	230
032	266053-1	TAPPING SCREW 4X35	40
033	265995-6	TAPPING SCREW 4X18	40
034	183559-3	REAR COVER SET	570
035	643802-7	BRUSH HOLDER	150
036	687139-2	SUPPORT	190
037	643802-7	BRUSH HOLDER	150
038	B-80086	CARBON BRUSH SET CB-419A	
039	183559-3	REAR COVER SET	570
040	265995-6	TAPPING SCREW 4X18	40
041	687053-2	STRAIN RELIEF	70
042	650539-9	SWITCH TG803BSA-1	1,580
043	418038-5	F/R CHANGE LEVER	120
045	682566-8	CORD GUARD 10	80
046	691015-4	POWER SUPPLY CORD 0.75-2-2.5	740
047	213034-6	O RING 3	20
048	418040-8	CAM	100
049	153477-9	SWITCH LEVER COMPLETE	360
050	418037-7	SPEED CHANGE DIAL	230
A01	411780-7	KEY HOLDER 10	50
A02	763415-9	CHUCK KEY S10	230
A03	B-80086	CARBON BRUSH SET CB-419A	

SERVICE DRAWING

MODEL NO. DDF453

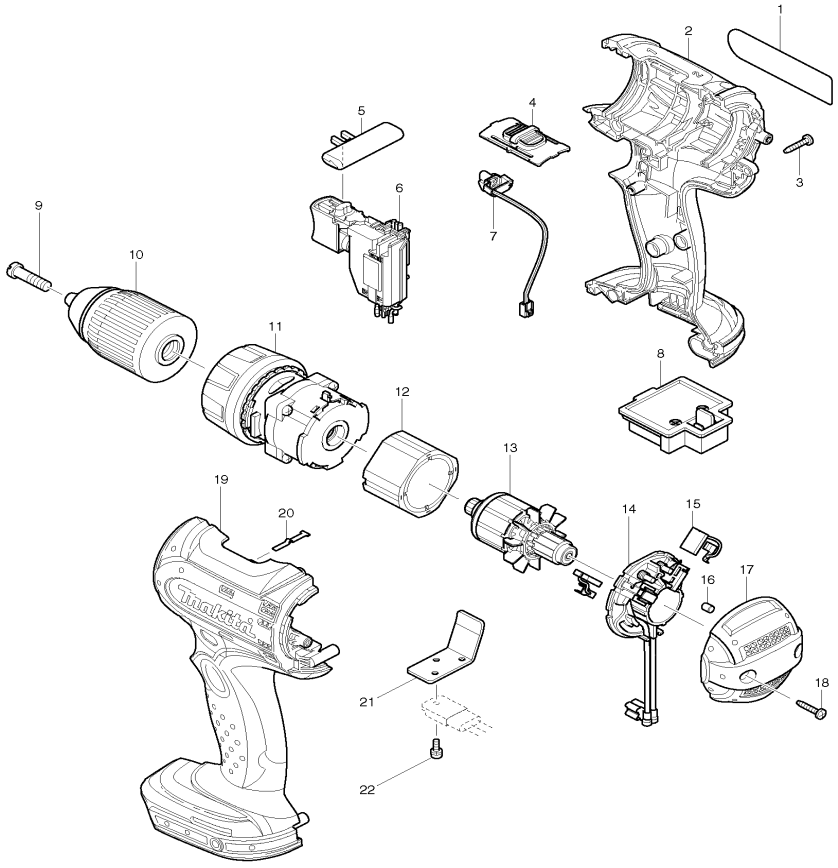

MODEL DDF453

ITEM	PARTS ID	DESCRIPTION	PRICE/BAHT
001	125310-5	SPEED CHANGE LEVER ASS'Y	130
002	187363-2	HOUSING SET	820
004	266130-9	TAPPING SCREW BIND PT 3X16	30
005	232182-2	LEAF SPRING	80
006	419250-0	F/R CHANGE LEVER	50
007	632A24-0	SWITCH UNIT	1,620
008	643852-2	TERMINAL	360
009	251468-5	- FLAT HEAD SCREW M6X22	100
010	766004-9	KEYLESS DRILL CHUCK 13	1,230
011	125483-4	GEAR ASS'Y	1,580
012	629834-8	DC MOTOR	1,140
013	911108-4	PAN HEAD SCREW M4X8	20
014	187363-2	HOUSING SET	820
A01	784636-0	+- BIT 2-65	160
A02	***DC18SD	DC18SD BATTERY CHARGER	5,780
A03	194513-2	BATTERY BL1815 SET	7,840
A04	450128-8	BATTERY COVER	70

SERVICE DRAWING

MODEL NO. DF030DW

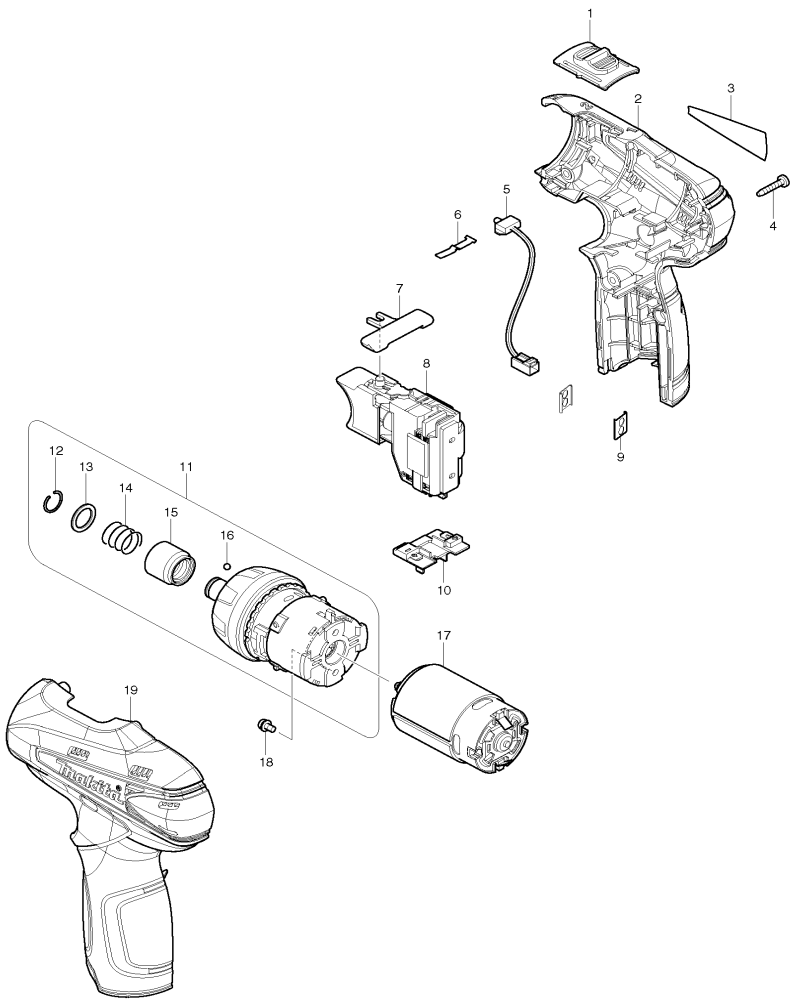

MODEL DF030DW

ITEM	PARTS ID	DESCRIPTION	PRICE/BAHT
001	126233-0	SPEED CHANGE LEVER ASSEMBLY	90
002	187359-3	HOUSING SET	660
004	266130-9	TAPPING SCREW BIND PT 3X16	30
005	631813-4	LED CIRCUIT	370
006	232239-9	LEAF SPRING	50
007	450504-6	F/R CHANGE LEVER	50
008	650699-7	SWITCH C3HW-3A-LF1M	1,890
009	345998-7	SET PLATE	50
010	643830-2	TERMINAL	130
011	125460-6	GEAR ASSEMBLY	1,230
012	231965-7	RING SPRING 10	40
013	267143-3	FLAT WASHER 11	110
014	233005-7	COMPRESSION SPRING 13	60
015	324919-2	BIT SLEEVE	190
016	216019-1	STEEL BALL 3	20
017	629853-4	DC MOTOR	780
018	911003-8	PAN HEAD SCREW M3X6	100
019	187359-3	HOUSING SET	660
A01	168467-9	HOLSTER	270
A02	194588-1	DC10WA BATTERY CHARGER	3,150
A03	196066-7	BATTERY BL1013 SET	3,120
A04	784250-2	+ BIT 2-45	110

SERVICE DRAWING

MODEL NO. DF330DW

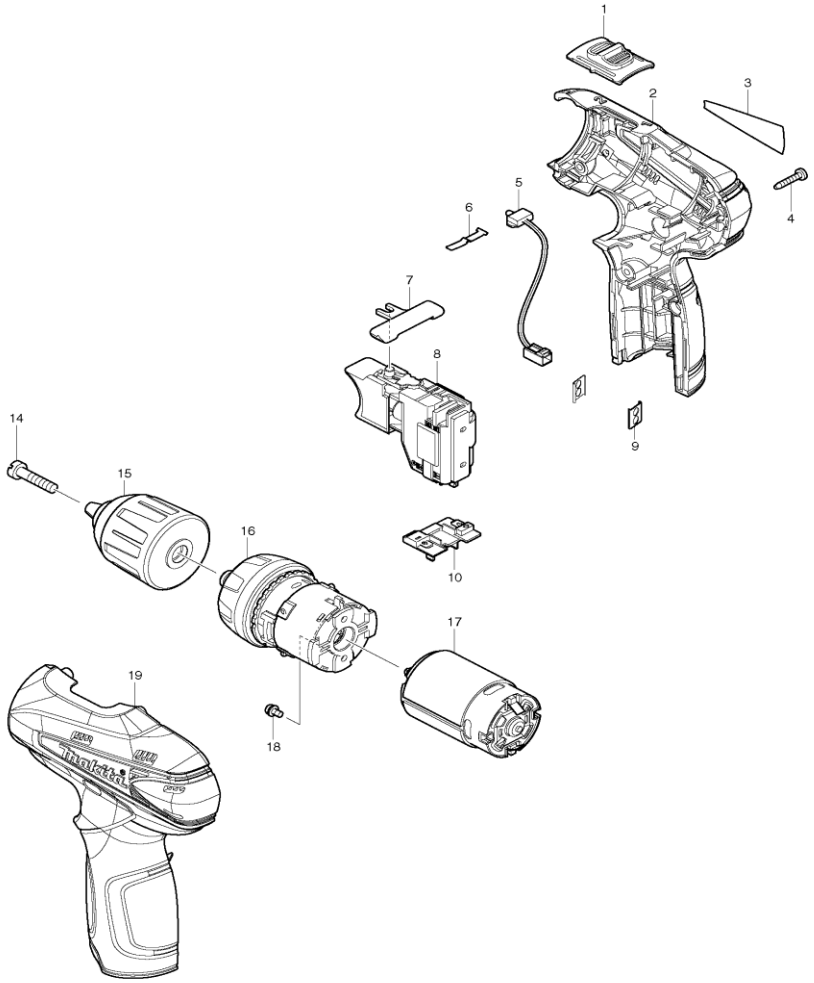

MODEL DF330DW

ITEM	PARTS ID	DESCRIPTION	PRICE/BAHT
001	126233-0	SPEED CHANGE LEVER ASSEMBLY	90
002	187359-3	HOUSING SET	660
004	266130-9	TAPPING SCREW BIND PT 3X16	30
005	631813-4	LED CIRCUIT	370
006	232239-9	LEAF SPRING	50
007	450504-6	F/R CHANGE LEVER	50
008	650699-7	SWITCH C3HW-3A-LF1M	1,890
009	345998-7	SET PLATE	50
010	643830-2	TERMINAL	130
014	251451-2	- PAN HEAD SCREW M5X22	80
015	766007-3	KEYLESS DRILL CHUCK 10	800
016	125539-3	GEAR ASS'Y	1,170
017	629853-4	DC MOTOR	780
018	911003-8	PAN HEAD SCREW M3X6	100
019	187359-3	HOUSING SET	660
A01	168467-9	HOLSTER	270
A02	194588-1	DC10WA BATTERY CHARGER	3,150
A03	196066-7	BATTERY BL1013 SET	3,120
A04	784202-3	PHILLIPS BIT 2-45	170

SERVICE DRAWING

MODEL NO. DF457D

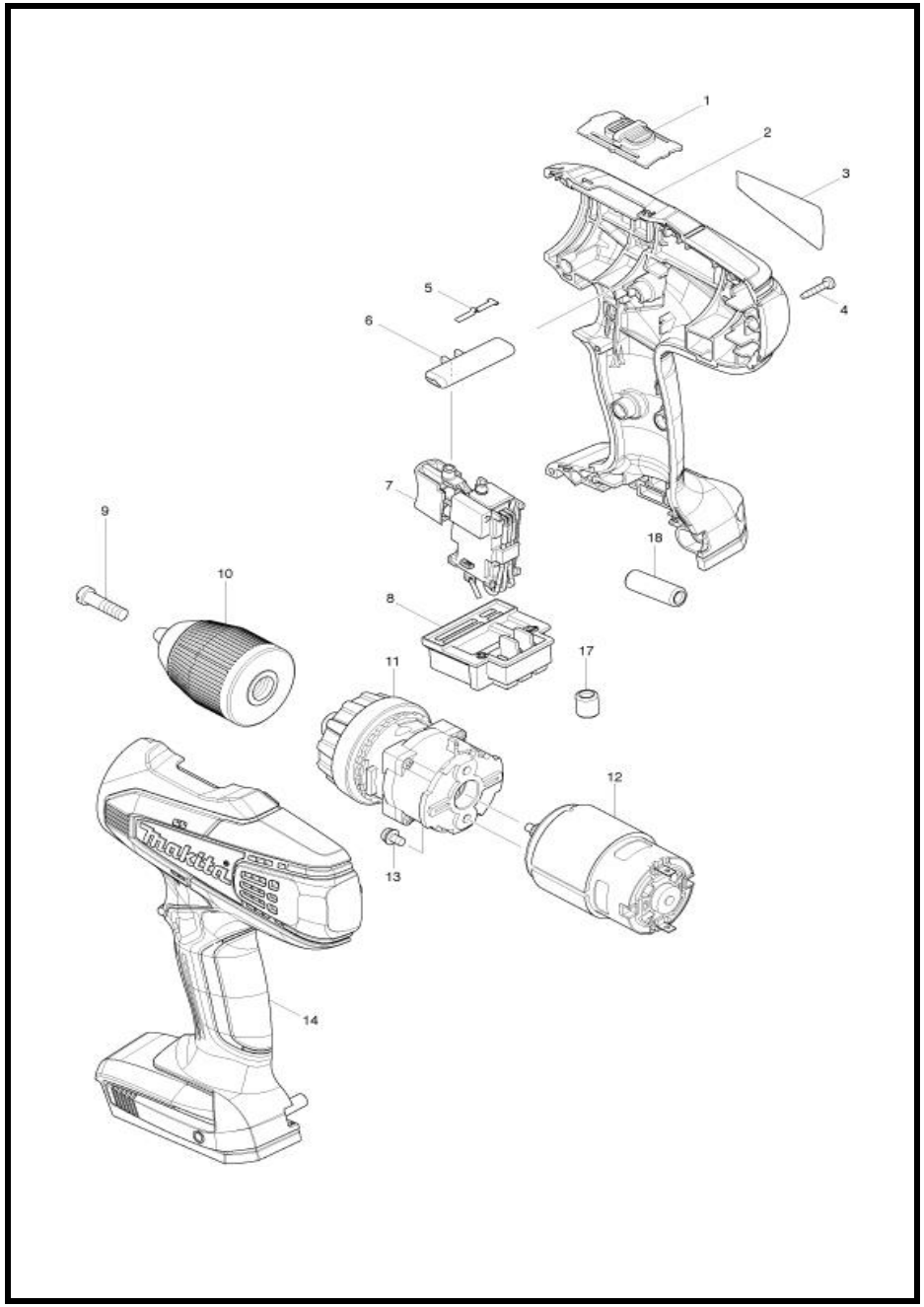

MODEL DF457D

ITEM	PARTS ID	DESCRIPTION	PRICE/BAHT
001	125310-5	SPEED CHANGE LEVER ASS'Y	130
001	231433-0	COMPRESSION SPRING 4	50
002	187026-0	HOUSING SET	930
004	266429-2	TAPPING SCREW 3X16	50
005	232182-2	LEAF SPRING	80
006	452399-3	F/R CHANGE LEVER	90
007	638887-6	SWITCH UNIT	1,310
008	643862-9	TERMINAL	250
009	251468-5	- FLAT HEAD SCREW M6X22	100
010	766004-9	KEYLESS DRILL CHUCK 13	1,230
011	125483-4	GEAR ASS'Y	1,580
012	629937-8	DC MOTOR	1,180
013	911108-4	PAN HEAD SCREW M4X8	20
014	187026-0	HOUSING SET	930
A01	784636-0	+- BIT 2-65	160
A02	195423-6	DC18WA BATTRY CHARGER	3,370
A03	196366-5	BATTERY BL1813G SET	4,240
A04	452652-7	BATTERY COVER	90
A05	452137-3	HANDLE	170
A05	162315-4	LATCH	170

SERVICE DRAWING

MODEL NO. DGA402

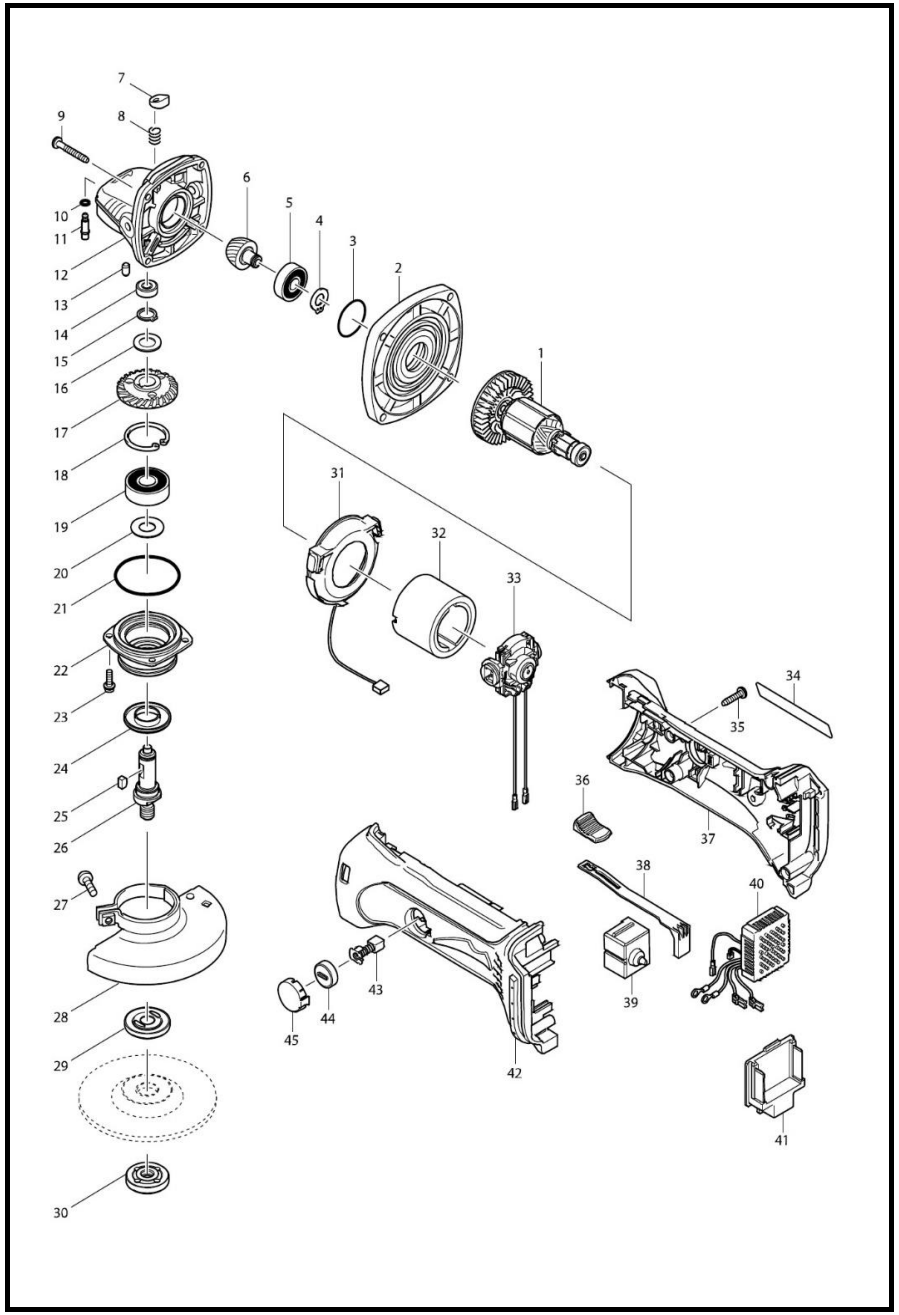

MODEL DGA402

ITEM	PARTS ID	DESCRIPTION	PRICE/BAHT
001	619218-8	ARMATURE	
002	317821-6	GEAR HOUSING COVER	320
003	213445-5	O-RING 26	30
004	961005-4	RETAINING RING S-9	30
005	210042-8	BALL BEARING 629LLB	250
006	227501-5	SPIRAL BEVEL GEAR 19	660
007	417771-6	PIN CAP	110
008	233072-2	COMPRESSION SPRING 8	30
009	266050-7	TAPPING SCREW 4X30	60
010	213960-9	O RING 5	100
011	256496-5	SHOULDER PIN 4	60
012	318051-2	GEAR HOUSING	410
013	263002-9	RUBBER PIN 4	30
014	210006-2	BALL BEARING 696ZZ	310
015	961052-5	RETAINING RING S-12	40
016	253744-3	FLAT WASHER 12	50
017	227502-3	SPIRAL BEVEL GEAR 39	490
018	962151-6	RETAINING RING R-32	90
019	211129-9	BALL BEARING 6201DDW	300
020	267238-2	FLAT WASHER 12	100
021	213622-9	O RING 45	110
022	317819-3	BEARING BOX	250
023	911121-2	PAN HEAD SCREW M4X14	20
024	345464-4	LABYRINTH RING	100
025	254011-9	WOODRUFF KEY 4	90
026	324488-3	SPINDLE	310
027	265103-9	PAN HEAD SCREW M5X14	100
028	135196-9	WHEEL COVER ASS'Y	220
029	224314-5	INNER FLANGE 30	330
030	224559-5	LOCK NUT 10-30	170
031	631714-6	LED CIRCUIT	480
032	638627-2	YOKE UNIT	1,500
033	638448-2	ENDBELL COMPLETE	220
034	864484-4	DGA402 NAME PLATE	
035	265995-6	TAPPING SCREW 4X18	40
036	419566-3	SWITCH KNOB	100
037	187839-9	HOUSING SET	1,030
038	419519-2	SWITCH LEVER	90
039	650579-7	SWITCH 1246.3223	330
040	620243-4	CONTROLLER	2,490
041	644808-8	TERMINAL	270
042	187839-9	HOUSING SET	1,030
043	195018-5	CARBON BRUSH CB-430	
044	643954-4	BRUSH HOLDER CAP	120
045	419518-4	HOLDER CAP COVER	60
A01	782420-7	LOCK NUT WRENCH 20	130
A02	***DC18RC	DC18RC FAST CHARGER	5,700
A03	194204-5	BATTERY BL1830 SET	12,940
A04	450128-8	BATTERY COVER	70
A07	A-80852	GRINDING WHEEL 100X6X16	

SERVICE DRAWING

MODEL NO. DGA404

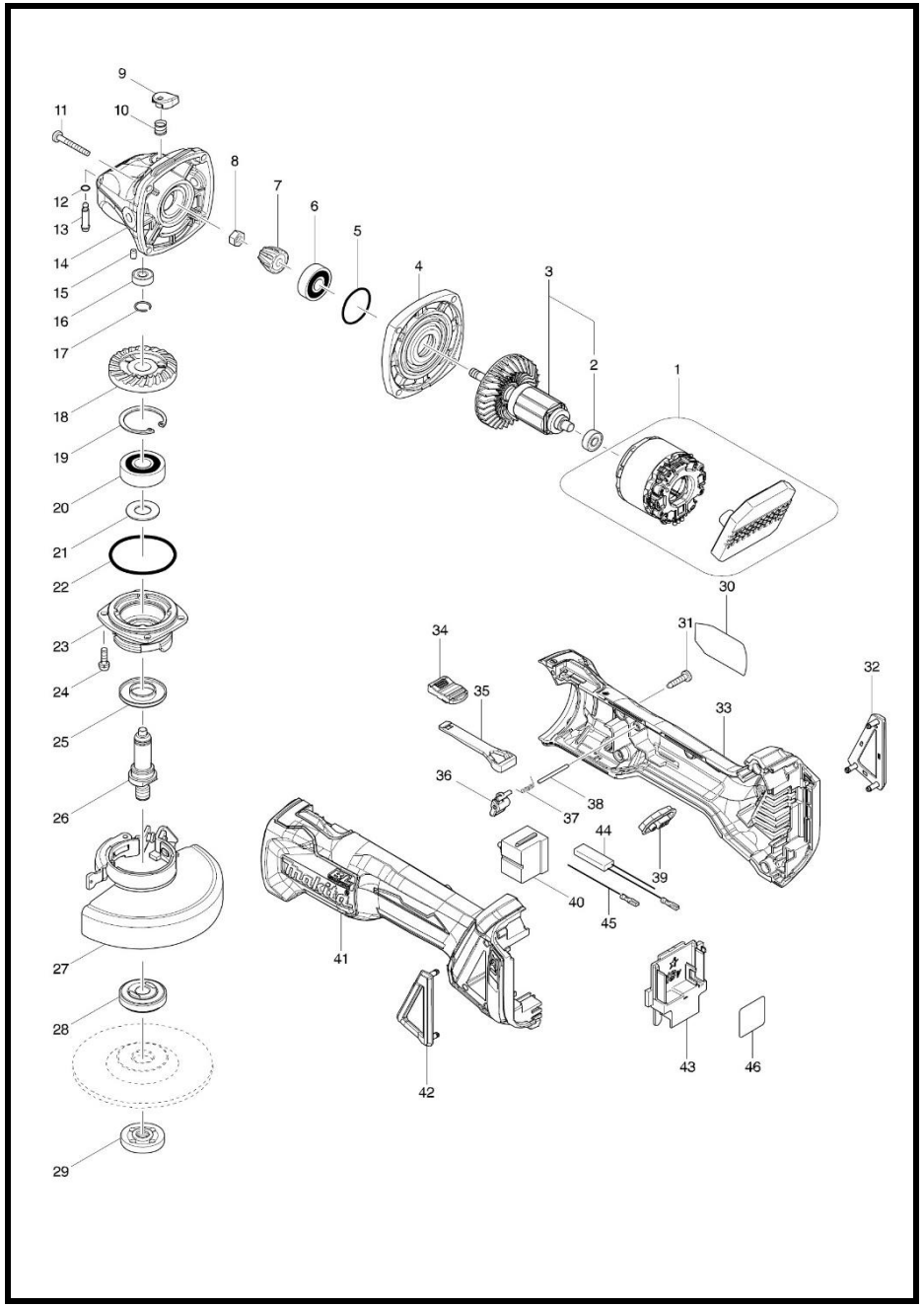

MODEL DGA404

ITEM	PARTS ID	DESCRIPTION	PRICE/BAHT
001	629134-6	STATOR COMPLETE	
001-1	629173-6	STATOR COMPLETE	
002	211021-9	BALL BEARING 607LLB	240
003	510297-8	ROTOR ASS'Y INC. 2	
004	319214-3	GEAR HOUSING COVER	380
005	213445-5	O-RING 26	30
006	210042-8	BALL BEARING 629LLB	250
007	227541-3	SPIRAL BEVEL GEAR 10	460
008	252186-8	HEX. NUT M6	70
009	417771-6	PIN CAP	110
010	233072-2	COMPRESSION SPRING 8	30
011	266361-0	TAPPING SCREW 4X30	70
012	213960-9	O RING 5	100
013	256546-6	SHOULDER PIN 4	70
014	319213-5	GEAR HOUSING	690
015	263002-9	RUBBER PIN 4	30
016	210006-2	BALL BEARING 696ZZ	310
017	233950-6	RING SPRING 11	80
018	227641-9	SPIRAL BEVEL GEAR 37	530
019	962151-6	RETAINING RING R-32	90
020	211129-9	BALL BEARING 6201DDW	300
021	267113-2	FLAT WASHER 12	30
022	213622-9	O RING 45	110
023	318331-6	BEARING BOX	230
024	911121-2	PAN HEAD SCREW M4X14	20
025	345464-4	LABYRINTH RING	100
026	324956-6	SPINDLE	230
027	122893-6	TOOLLESS WHEEL COVER 100K AS!	870
027-C10	213009-5	O RING 4	20
027-C20	265180-1	PAN HEAD SCREW M5X16	50
028	224314-5	INNER FLANGE 30	330
029	224559-5	LOCK NUT 10-30	170
031	266326-2	TAPPING SCREW 4X18	30
032	455450-8	DUST COVER R	290
033	187998-9	MOTOR H0USING SET	820
033-C10	263005-3	RUBBER PIN 6 INC. 41	30
034	455447-7	SWITCH KNOB	40
035	455446-9	SWITCH LEVER	40
036	455448-5	LEVER	60
037	231679-8	TORSION SPRING 2	40
038	268330-7	PIN 2	40
039	142901-7	INDICATOR PANEL COMPLETE	120
040	650579-7	SWITCH 1246.3223	330
041	187998-9	MOTOR H0USING SET	820
041-C10	263005-3	RUBBER PIN 6 INC. 33	30
042	455449-3	DUST COVER L	290
043	643899-6	TERMINAL	270
044	632E34-1	RESISTOR UNIT	
045	632E33-3	LEAD UNIT	
A01	A-80852	GRINDING WHEEL 100X6X16	
A02	158237-4	GRIP 36 COMPLETE	360
A03	782420-7	LOCK NUT WRENCH 20	130
A04C	***DC18SD	DC18SD BATTERY CHARGER	5,780
A04B	***DC18RC	DC18RC FAST CHARGER	5,700
A05C	196448-3	BATTERY BL1815N SET	5,250
A05-1B	196015-4	BATTERY BL1830 SET	
A06C	450128-8	BATTERY COVER	70

SERVICE DRAWING

MODEL NO. DHP453

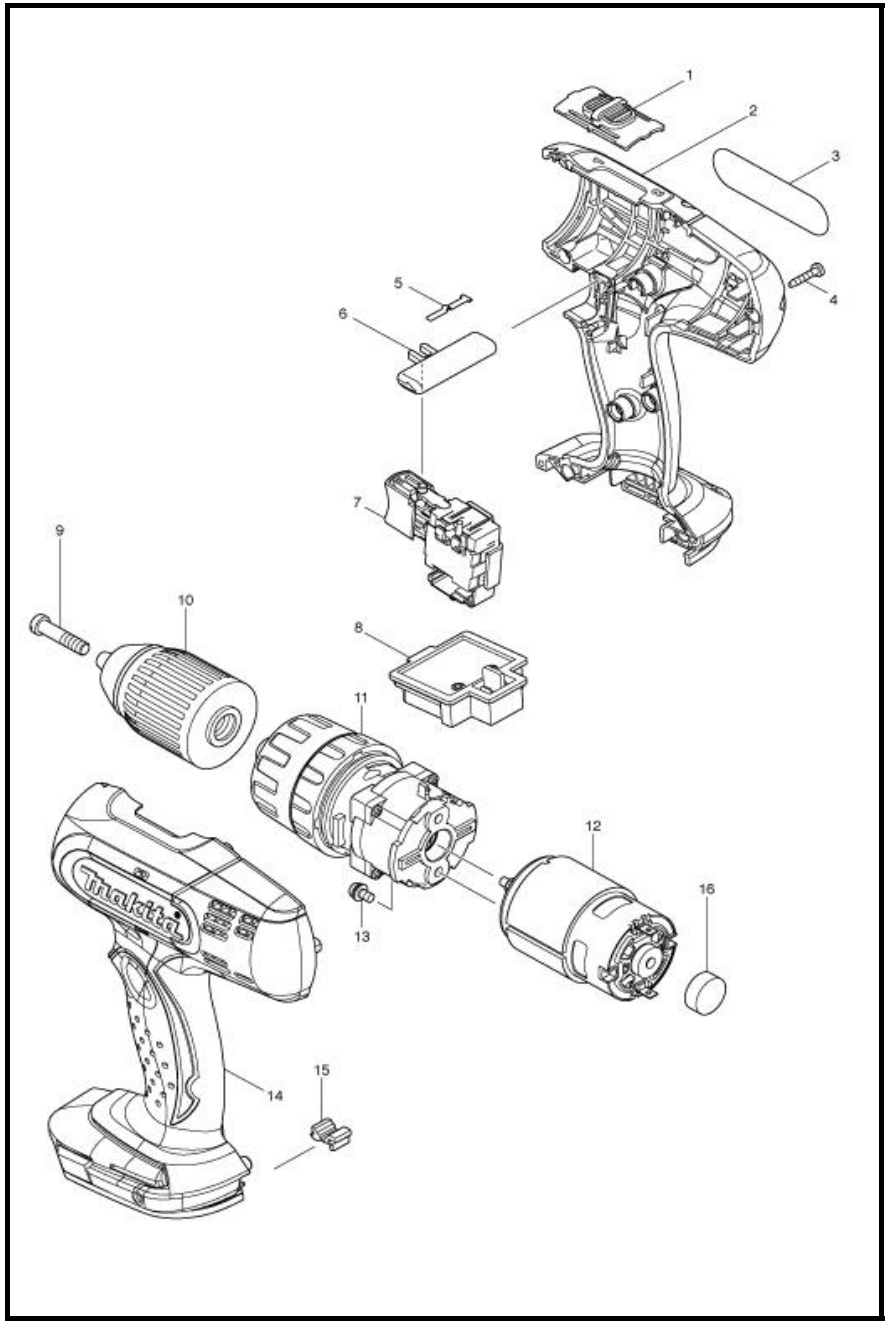

MODEL DHP453

ITEM	PARTS ID	DESCRIPTION	PRICE/BAHT
001	125310-5	SPEED CHANGE LEVER ASS'Y	130
002	187363-2	HOUSING SET	820
004	266130-9	TAPPING SCREW BIND PT 3X16	30
005	232182-2	LEAF SPRING	80
006	419250-0	F/R CHANGE LEVER	50
007	632A24-0	SWITCH UNIT	1,620
008	643852-2	TERMINAL	360
009	251468-5	- FLAT HEAD SCREW M6X22	100
010	766004-9	KEYLESS DRILL CHUCK 13	1,230
011	125485-0	GEAR ASS'Y	2,280
012	629834-8	DC MOTOR	1,140
013	911108-4	PAN HEAD SCREW M4X8	20
014	187363-2	HOUSING SET	820
015	424026-2	CUSHION	170
016	421940-3	CAP	50
A01	784636-0	+- BIT 2-65	160
A02	***DC18SD	DC18SD BATTERY CHARGER	5,780
A04	450128-8	BATTERY COVER	70

SERVICE DRAWING

MODEL NO. DHR242

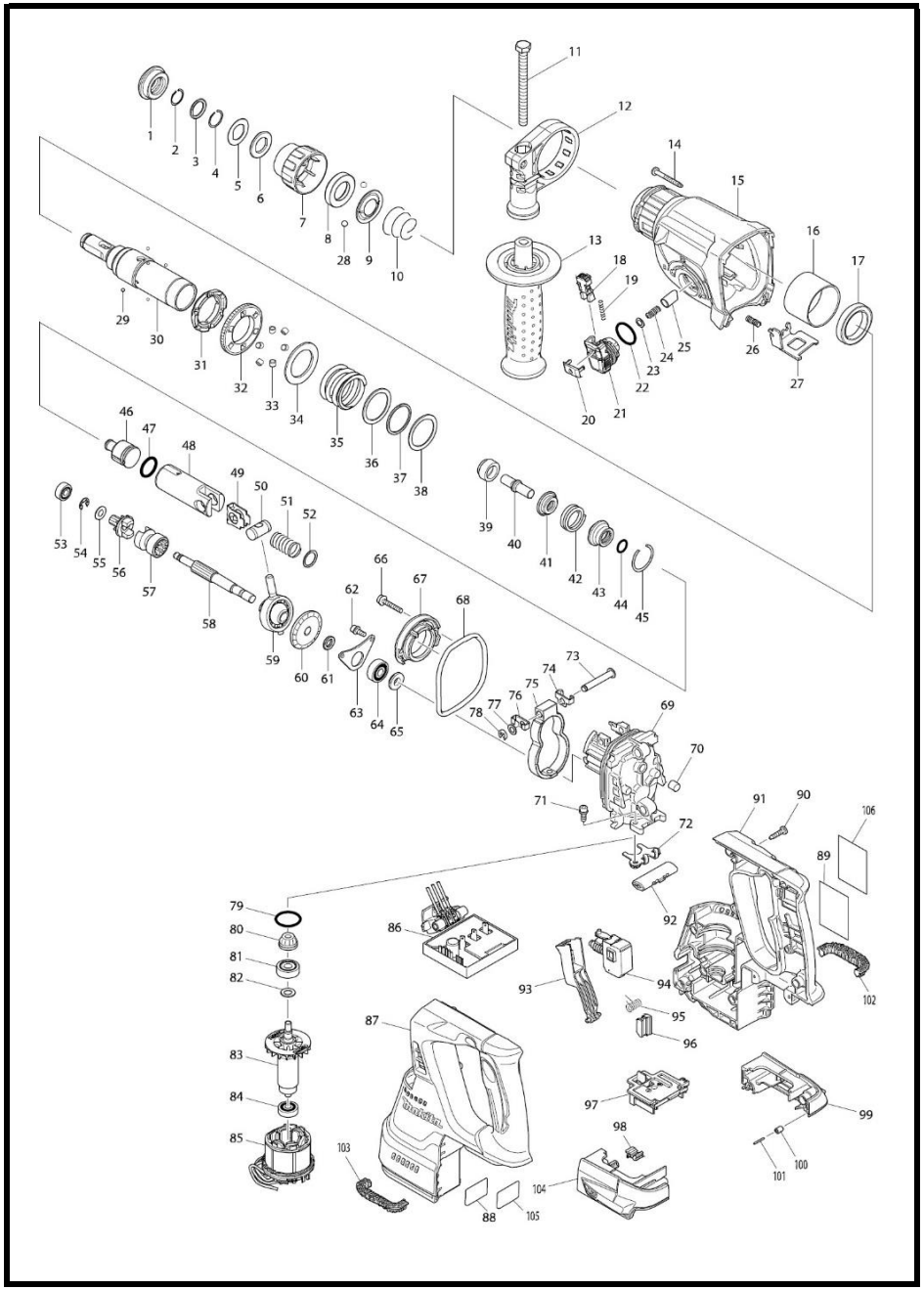

MODEL DHR242

ITEM	PARTS ID	DESCRIPTION	PRICE/BAHT	ITEM	PARTS ID	DESCRIPTION	PRICE/BAHT
001	286288-8	CAP 35	70	050	324215-8	PISTON JOINT	180
002	233989-9	RING SPRING 14	30	051	234098-7	COMPRESSION SPRING 14	40
003	346221-3	WASHER 16	90	052	267447-3	FLAT WASHER 14	30
004	233992-0	RING SPRING 15	30	053	211012-0	BALL BEARING 606ZZ	230
005	267437-6	FLAT WASHER 17	30	054	257336-0	STOP RING EXT U-6	20
006	424364-2	RUBBER WASHER 16	30	055	253186-1	FLAT WASHER 7	100
007	451533-2	CHUCK COVER	70	056	227231-8	SPUR GEAR 10	710
008	325813-1	RING 21	120	057	331814-9	CLUTCH CAM A	200
009	346177-0	GUIDE WASHER	60	058	326140-9	CAM SHAFT	400
010	233916-6	CONICAL COMP. SPRING 21-29	30	059	219020-5	SWASH BEARING 10	880
011	266745-2	HEX.BOLT M8X90	110	060	227588-7	SPIRAL BEVEL GEAR 32	420
012	453129-5	GRIP BASE	150	061	257323-9	RING 8	90
013	158057-6	GRIP 36 COMPLETE	350	062	922118-6	HEX. SOCKET HEAD BOLT M4X12	80
014	266351-3	TAPPING SCREW 4X35	30	063	346038-4	BEARING RETAINER B	90
015-C20	890903-4	INDICATION LABEL	20	064	211032-4	BALL BEARING 608ZZ	200
015-C10	213345-9	OIL SEAL 25	110	065	324212-4	RING 8	180
015	141229-0	GEAR HOUSING COMPLETE	510	066	922147-9	HEX. SOCKET HEAD BOLT M4X25	40
016	331890-3	CUP SLEEVE	160	067	141230-5	INNER SUPPORT COMPLETE	270
017	211294-4	BALL BEARING 6806LLU	350	068	213767-3	O-RING 75	120
018	454112-5	LOCK BUTTON	70	069	318810-4	INNER HOUSING	1,130
019	234264-6	COMPRESSION SPRING 3	20	070	443153-6	FELT	30
020	453131-8	CHANGE LEVER COVER	60	071	922118-6	HEX. SOCKET HEAD BOLT M4X12	80
021	453125-3	CHANGE LEVER	120	072	346536-8	BEARING RETAINER A	130
022	213381-5	O RING 21	140	073	256536-9	FLAT FILLISTER HD PIN 6	120
023	253308-3	THIN WASHER 6	30	074	346538-4	WEIGHT HOLDER GUIDE	60
024	234147-0	COMPRESSION SPRING 5	20	075	313224-2	COUNTER WEIGHT	290
025	325785-0	PUSH CORN	90	076	346538-4	WEIGHT HOLDER GUIDE	60
026	233360-7	COMPRESSION SPRING 4	110	077	253726-5	FLAT WASHER 6	70
027	346537-6	LOCK PLATE	140	078	961018-5	STOP RING E-5	50
028	216022-2	STEEL BALL 7.0	20	079	213008-7	O RING 22.4	40
029	216019-1	STEEL BALL 3	20	080	141458-5	SPIRAL BEVEL GEAR 11 COMPLETE	370
030	140265-3	TOOL HOLDER COMPLETE	810	081	210024-0	BALL BEARING 608LLU	240
031	313149-0	DRIVING FLANGE	130	082	253835-0	FLAT WASHER 8	60
031	332139-4	DRIVING FLANGE	130	083	619293-4	ROTOR	1,700
032	227232-6	SPUR GEAR 51	150	084	210022-4	BALL BEARING 626DDW	280
032	227360-7	SPUR GEAR 51	150	085	629922-1	STATOR	
033	268226-2	PIN 6	290	085-1	529922-0	STATOR ASS'Y	
034	267414-8	FLAT WASHER 30	60	085-2	529187-4	STATOR ASS'Y	
035	234148-8	COMPRESSION SPRING 31	90	086	620241-8	CONTROLLER	7,460
036	267153-0	FLAT WASHER 30	70	087	187687-6	HOUSING SET INC. 91	1,210
037	257932-4	SPIRO LOCK WASHER 30	180	087-1	183A34-5	HOUSING SET INC. 91	1,160
038	267153-0	FLAT WASHER 30	70	087-2	183C02-0	HOUSING SET INC. 91	1,160
039	325783-4	SLEEVE 9B	80	089	815A38-6	DHR242 NAME PLATE	
040	325789-2	IMPACT BOLT A	140	090	266326-2	TAPPING SCREW 4X18	30
041	325792-3	WASHER 10	90	091	187687-6	HOUSING SET INC. 87	1,210
042	234149-6	COMPRESSION SPRING 20	70	091-1	183A34-5	HOUSING SET INC. 87	1,160
043	325793-1	O-RING CASE B	100	091-2	183C02-0	HOUSING SET INC. 87	1,160
044	213073-6	O RING 9	110	092	453124-5	F/R CHANGE LEVER	90
045	233979-2	RING SPRING 28	20	093	453123-7	SWITCH LEVER	90
046	326139-4	STRIKER	300	094	650709-0	SWITCH C3JW-1A-P	880
047	213258-4	O RING 17.5	170	095	233598-4	TORSION SPRING 6	40
048	310345-1	PISTON CYLINDER	600	096	313226-8	OPENER	100
049	346036-8	GUIDE PLATE	70	097	644808-8	TERMINAL	270

SERVICE DRAWING

MODEL NO. DHR242

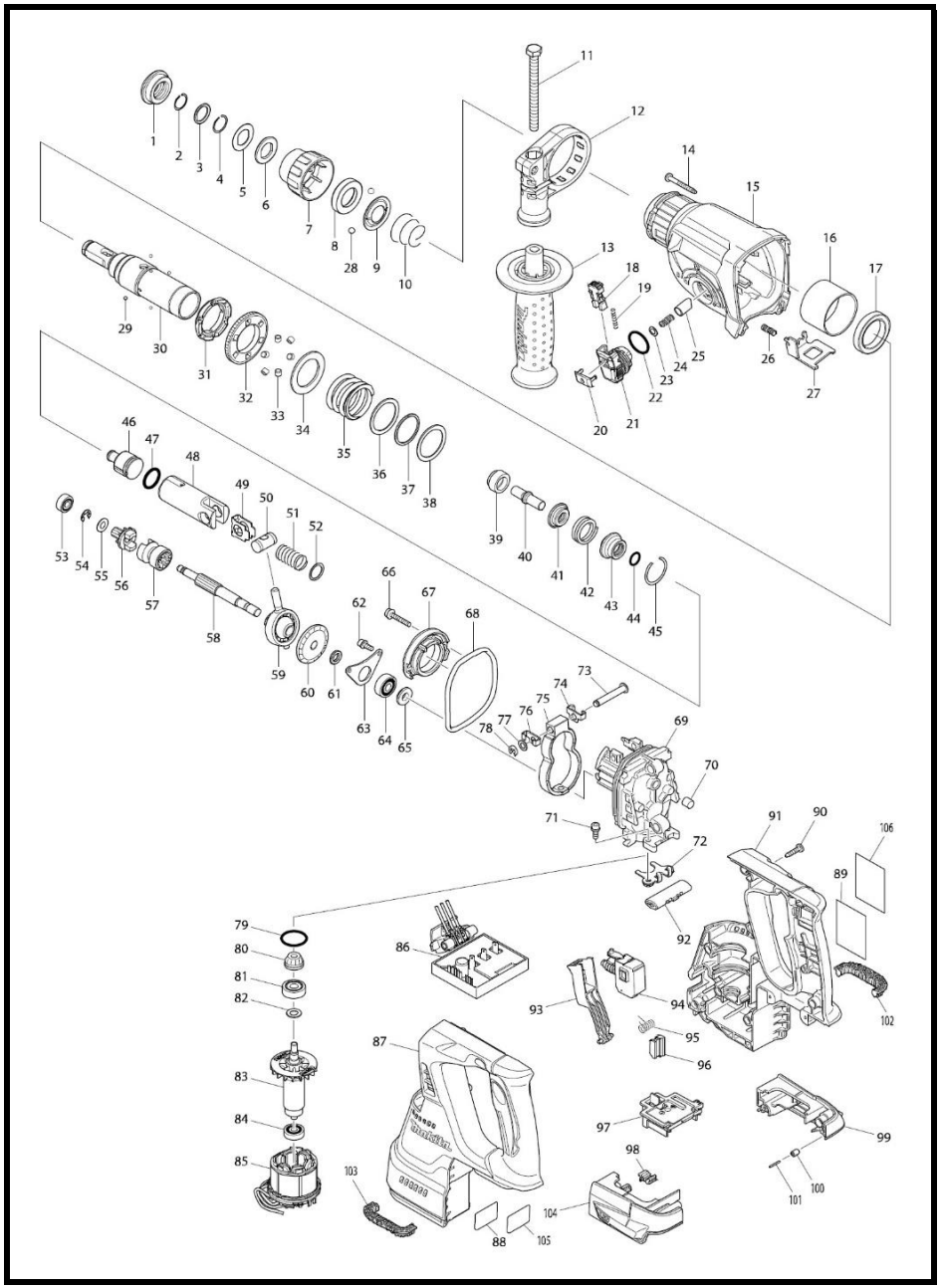

MODEL DHR242

ITEM	PARTS ID	DESCRIPTION	PRICE/BAHT
098	424476-1	CUSHION	60
099-C10	263005-3	RUBBER PIN 6 INC. 104	30
099	187377-1	BATTERY HOUSING SET	450
100	263036-2	RUBBER PIN 5 PIN 1.5	120
103	424473-7	CUSHION RUBBER	160
104-C10	263005-3	RUBBER PIN 6 INC. 99	30
104	187377-1	BATTERY HOUSING SET	450
105	893072-0	CLEAR LABEL	20
106	890994-5	CLEAR LABEL	40
107	424734-5	SPONGE	40
A01	324219-0	DEPTH GAUGE	100

SERVICE DRAWING

MODEL NO. DP4010

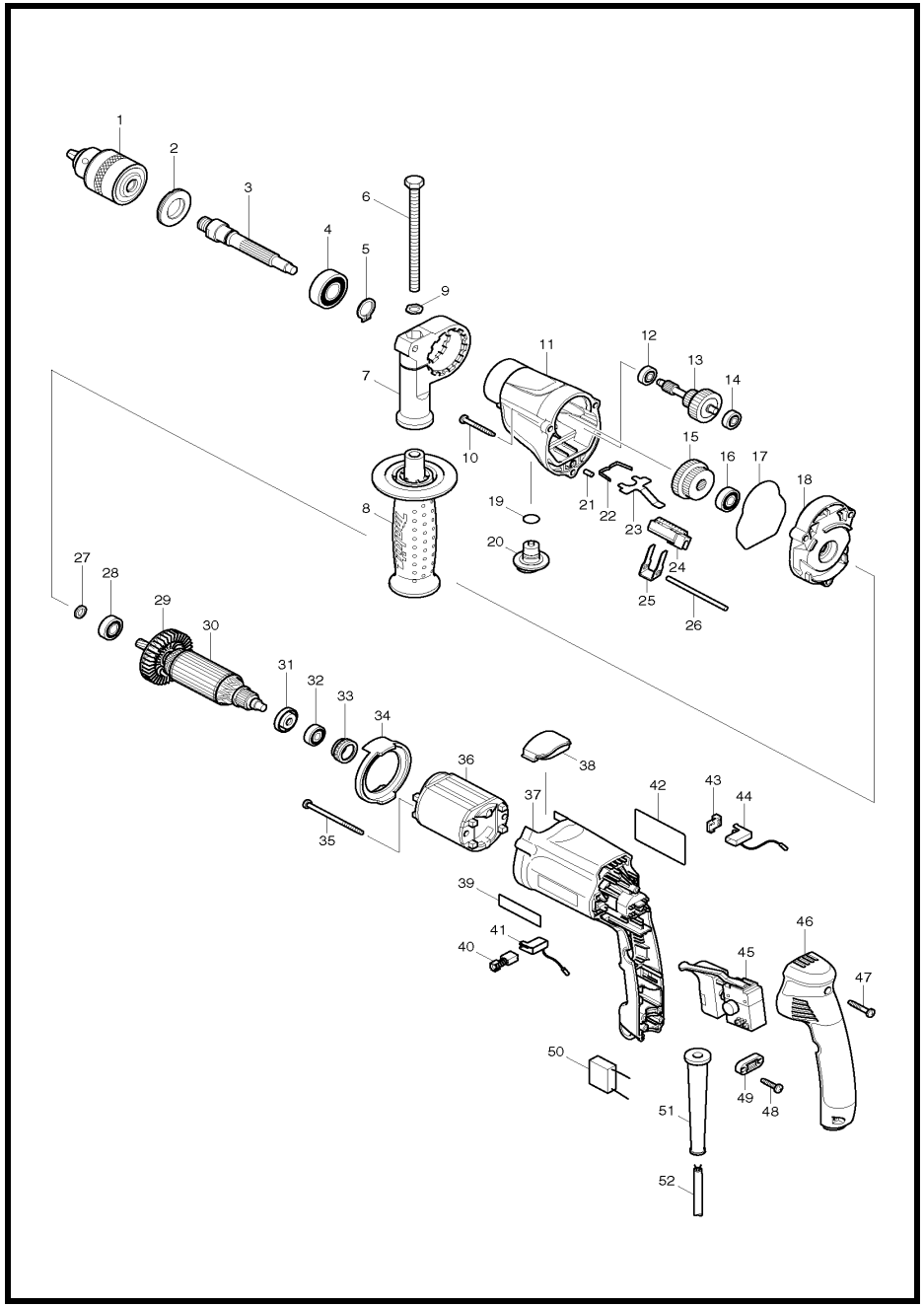

MODEL DP4010

ITEM	PARTS ID	DESCRIPTION	PRICE/BAHT
001	193067-6	DRILL CHUCK & KEY SET	2,090
002	285806-9	BEARING RETAINER 19-36	160
003	324835-8	SPINDLE	570
004	211206-7	BALL BEARING 6202LLB	460
005	961055-9	RETAINING RING S-15	50
006	921923-8	HEX. BOLT M8X120	80
007	417630-4	GRIP BASE	190
008	153503-4	GRIP 36 COMPLETE	170
009	345280-4	HEX. WASHER	30
010	266351-3	TAPPING SCREW 4X35	30
011	318187-7	GEAR HOUSING	870
012	210028-2	BALL BEARING 606ZZ	130
013	153622-6	GEAR COMPLETE	1,290
014	210028-2	BALL BEARING 606ZZ	130
015	227030-8	SPUR GEAR 29-37	240
016	210029-0	BALL BEARING 608ZZ	130
017	421810-6	SEAL RING	100
018	158412-2	GEAR HOUSING COVER COMPLETE	570
019	213122-9	O RING 12	30
020	417805-5	CHANGE LEVER B	120
021	256251-5	PIN 4	60
022	232143-2	LEAF SPRING	80
023	345225-2	LOCK PLATE	80
024	417804-7	RACK 12	110
025	345223-6	CHANGE PLATE B	80
026	268092-7	PIN 4	50
027	262087-2	RING 8	360
028	210005-4	BALL BEARING 608DDW	240
030	517413-3	ARMATURE ASS'Y 220V	
031	681636-0	INSULATION WASHER	60
032	211021-9	BALL BEARING 607LLB	240
033	421494-0	RUBBER RING 19	250
034	417803-9	BAFFLE PLATE	110
035	266340-8	TAPPING SCREW 4X65	70
036	633528-9	FIELD 220-240V	
037	417807-1	MOTOR HOUSING	710
038	450179-1	CAP	160
040	B-80086	CARBON BRUSH SET CB-419A	
041	643989-5	BRUSH HOLDER	150
043	689111-0	SPACER	90
044	643988-7	BRUSH HOLDER	150
045	650524-2	SWITCH TG813ALB-2	1,950
046	153284-0	HANDLE COVER COMPLETE	720
047	266374-1	TAPPING SCREW 4X25	30
048	266326-2	TAPPING SCREW 4X18	30
049	687140-7	STRAIN RELIEF	40
051	682566-8	CORD GUARD 10	80
052	691015-4	POWER SUPPLY CORD 0.75-2-2.5	740
A01	324219-0	DEPTH GAUGE	100
A02	410102-8	KEY HOLDER	80
A03	763430-3	CHUCK KEY S13	150

SERVICE DRAWING

MODEL NO. DP4011

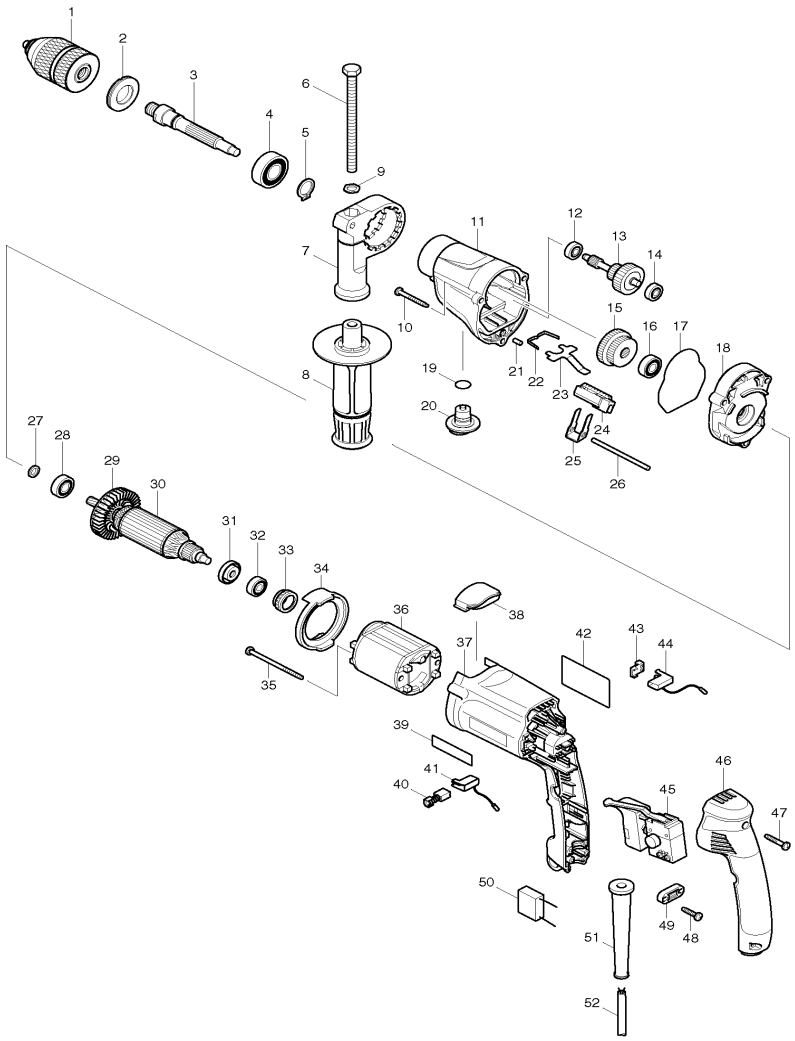

MODEL DP4011

ITEM	PARTS ID	DESCRIPTION	PRICE/BAHT
001	192664-5	KEYLESS DRILL CHUCK	3,480
002	285806-9	BEARING RETAINER 19-36	160
003	324835-8	SPINDLE	570
004	211206-7	BALL BEARING 6202LLB	460
005	961055-9	RETAINING RING S-15	50
006	921923-8	HEX. BOLT M8X120	80
007	417630-4	GRIP BASE	190
008	153503-4	GRIP 36 COMPLETE	170
009	345280-4	HEX. WASHER	30
010	266351-3	TAPPING SCREW 4X35	30
011	318187-7	GEAR HOUSING	870
012	210028-2	BALL BEARING 606ZZ	130
013	153622-6	GEAR COMPLETE	1,290
014	210028-2	BALL BEARING 606ZZ	130
015	227030-8	SPUR GEAR 29-37	240
016	210029-0	BALL BEARING 608ZZ	130
017	421810-6	SEAL RING	100
018	158412-2	GEAR HOUSING COVER COMPLETE	570
019	213122-9	O RING 12	30
020	417805-5	CHANGE LEVER B	120
021	256251-5	PIN 4	60
022	232143-2	LEAF SPRING	80
023	345225-2	LOCK PLATE	80
024	417804-7	RACK 12	110
025	345223-6	CHANGE PLATE B	80
026	268092-7	PIN 4	50
027	262087-2	RING 8	360
028	210005-4	BALL BEARING 608DDW	240
030	517413-3	ARMATURE ASS'Y 220V	
031	681636-0	INSULATION WASHER	60
032	211021-9	BALL BEARING 607LLB	240
033	421494-0	RUBBER RING 19	250
034	417803-9	BAFFLE PLATE	110
035	266340-8	TAPPING SCREW 4X65	70
036	633528-9	FIELD 220-240V	
037	417807-1	MOTOR HOUSING	710
038	450179-1	CAP	160
040	B-80422	CARBON BRUSH SET CB-419A	
041	643989-5	BRUSH HOLDER	150
043	689111-0	SPACER	90
044	643988-7	BRUSH HOLDER	150
045	650524-2	SWITCH TG813ALB-2	1,950
046	153284-0	HANDLE COVER COMPLETE	720
047	266374-1	TAPPING SCREW 4X25	30
048	266326-2	TAPPING SCREW 4X18	30
049	687140-7	STRAIN RELIEF	40
051	682566-8	CORD GUARD 10	80
052	691015-4	POWER SUPPLY CORD 0.75-2-2.5	740
A01	324219-0	DEPTH GAUGE	100

SERVICE DRAWING

MODEL NO. DP4700

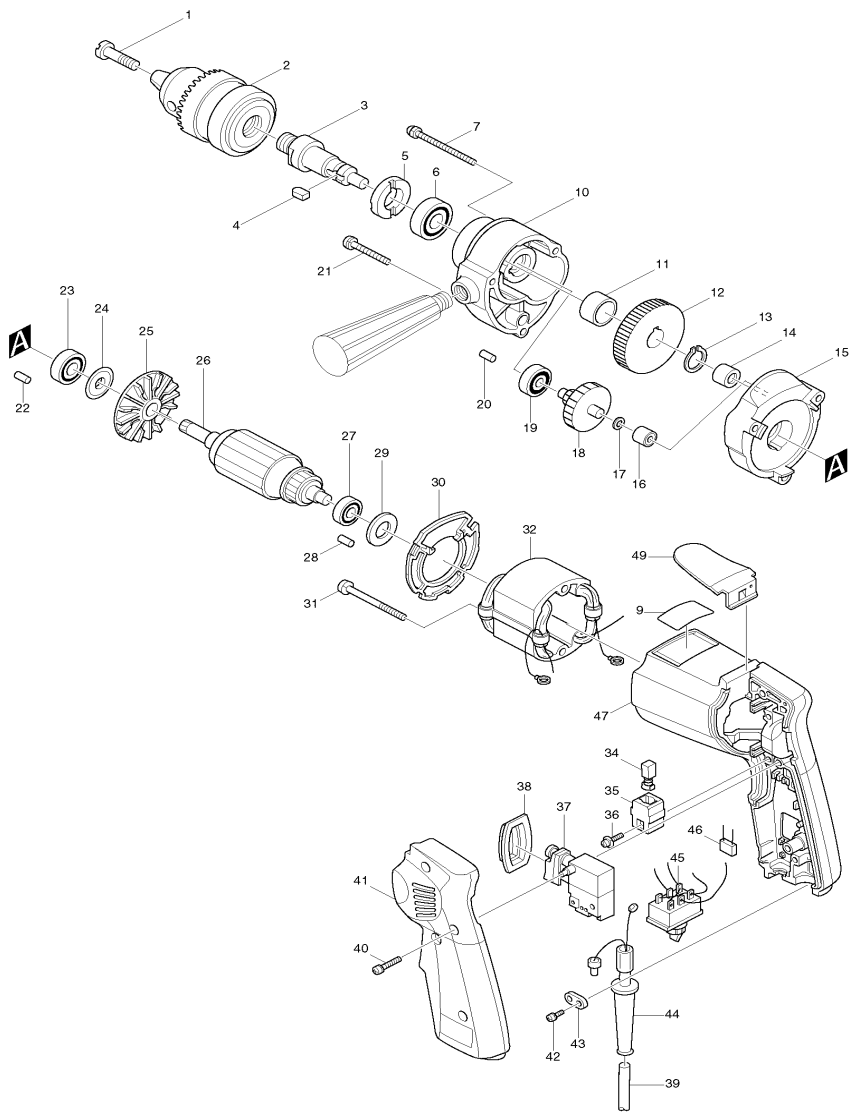

MODEL DP4700

ITEM	PARTS ID	DESCRIPTION	PRICE/BAHT
001	251425-3	- FLAT HEAD SCREW M6X22	90
002	192877-8	DRILL CHUCK S13	2,550
003	321082-2	SPINDLE	1,410
004	254211-1	KEY 5	80
005	285807-7	BEARING RETAINER 22-36	170
006	211206-7	BALL BEARING 6202LLB	460
007	911288-6	PAN HEAD SCREW M5X65	80
010	153551-3	GEAR HOUSING COMPLETE	560
011	257018-4	RING 15	150
012	221261-1	SPUR GEAR 47	720
013	961054-1	RETAINING RING S-14	30
014	212004-2	NEEDLE BEARING 810	290
015	153552-1	GEAR HOUSING COVER	490
016	212012-3	NEEDLE BEARING 609	320
017	253715-0	FLAT WASHER 6	60
018	226044-4	GEAR COMPLETE 7-46	1,290
019	211016-2	BALL BEARING 626LLB	320
020	263002-9	RUBBER PIN 4	30
021	911273-9	PAN HEAD SCREW M5X50	60
022	263002-9	RUBBER PIN 4	30
023	211033-2	BALL BEARING 608LB	200
024	213002-9	DUST SEAL 8	120
026	515113-9	ARMATURE ASS'Y 220V	
027	211028-5	BALL BEARING 627LB	290
028	263002-9	RUBBER PIN 4	30
029	253192-6	FLAT WASHER 14	70
030	411528-7	BAFFLE PLATE	120
031	911185-6	PAN HEAD SCREW M4X55	80
032	525098-1	FIELD ASS'Y 220V	
034	B-80254	CARBON BRUSH SET CB-64A	
035	643552-4	BRUSH HOLDER 5-8	100
036	911124-6	PAN HEAD SCREW M4X14	30
037	650226-0	SWITCH TG823AB-2	1,700
038	411852-8	SWITCH COVER	100
039	691015-4	POWER SUPPLY CORD 0.75-2-2.5	740
040	911153-9	PAN HEAD SCREW M4X28	30
041	154951-0	HANDLE COVER COMPLETE	670
042	911133-5	PAN HEAD SCREW M4X18	50
043	687001-1	STRAIN RELIEF	50
044	682504-0	CORD GUARD 10-85	190
045	651478-6	SWITCH VTX11	720
047	154952-8	MOTOR HOUSING COMPLETE	1,150
049	343693-3	HOOK	210
400	152492-0	GRIP 36 COMPLETE	230
401	763432-9	CHUCK KEY S13	230
402	410102-8	KEY HOLDER	80

SERVICE DRAWING

MODEL NO. DS4010

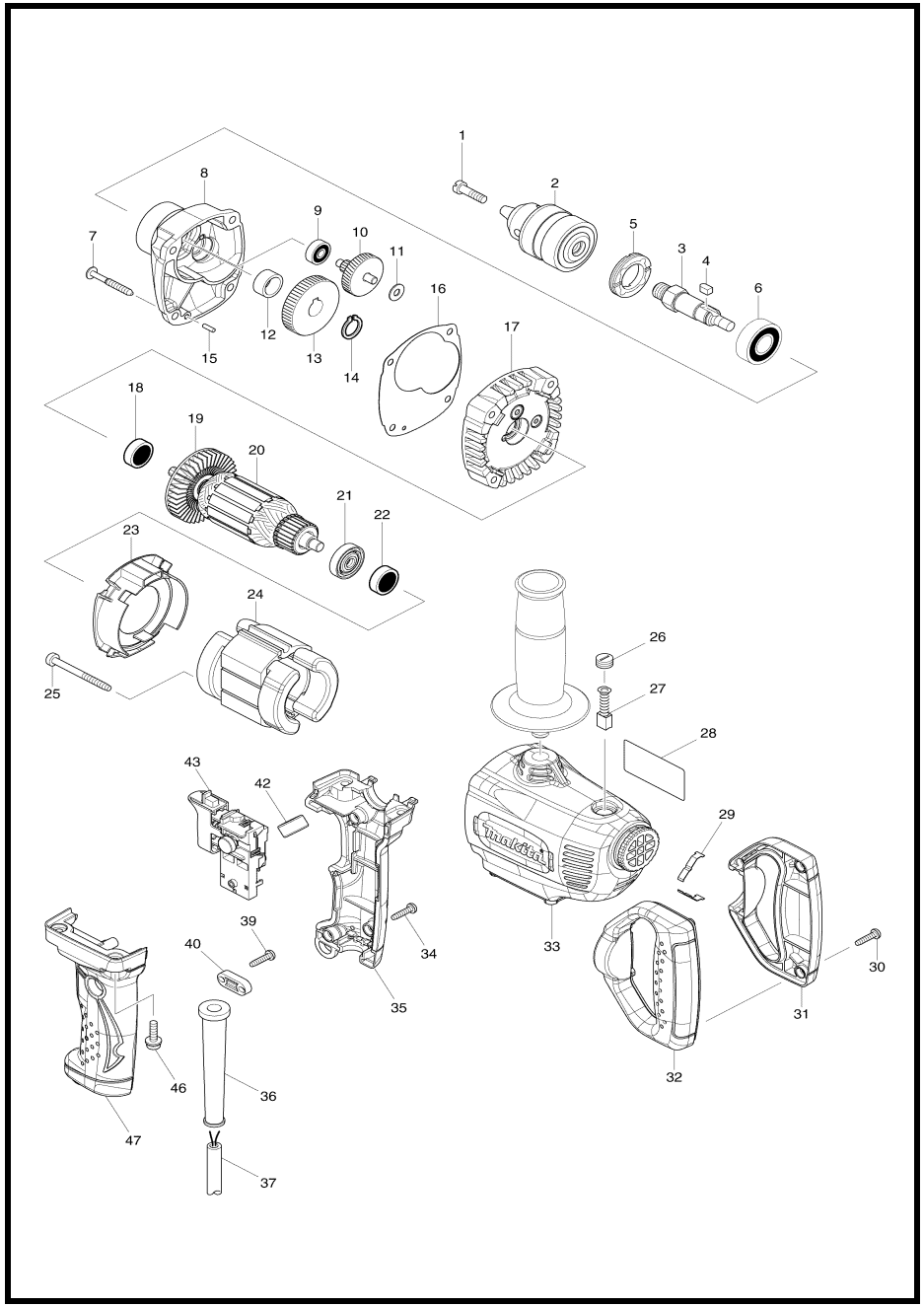

MODEL DS4010

ITEM	PARTS ID	DESCRIPTION	PRICE/BAHT
001	251425-3	- FLAT HEAD SCREW M6X22	90
002	192877-8	DRILL CHUCK S13	2,550
003	325494-1	SPINDLE	1,260
004	254211-1	KEY 5	80
005	285807-7	BEARING RETAINER 22-36	170
006	211206-7	BALL BEARING 6202LLB	460
007	266211-9	TAPPING SCREW 5X40	60
008	140620-9	GEAR HOUSING COMPLETE	1,000
009	211016-2	BALL BEARING 626LLB	320
010	226028-2	GEAR COMPLETE 7-41	1,140
011	261008-1	FIBER WASHER 6	30
012	257018-4	RING 15	150
013	221261-1	SPUR GEAR 47	720
014	961054-1	RETAINING RING S-14	30
015	256180-2	PIN 3	40
016	452066-0	GASKET	150
017	140619-4	GEAR HOUSING COVER COMPLETE	1,370
018	211031-6	BALL BEARING 608LLB	190
020	513803-8	ARMATURE ASS'Y 220V	
021	681659-8	INSULATION WASHER	120
022	211031-6	BALL BEARING 608LLB	190
023	452063-6	BAFFLE PLATE	90
024	525828-0	FIELD ASS'Y 220V	
025	266095-5	TAPPING SCREW 5X55	120
026	643550-8	BRUSH HOLDER CAP 5-8	100
027	B-80391	CARBON BRUSH SET CB-411A	
029	232260-8	LEAF SPRING	40
030	265995-6	TAPPING SCREW 4X18	40
031	188921-7	HANDLE SET	400
033	140621-7	MOTOR HOUSING COMPLETE	1,430
034	265995-6	TAPPING SCREW 4X18	40
035	188919-4	SWITCH HANDLE COVER SET	840
036	682566-8	CORD GUARD 10	80
037	691015-4	POWER SUPPLY CORD 0.75-2-2.5	740
039	265995-6	TAPPING SCREW 4X18	40
040	687053-2	STRAIN RELIEF	70
043	650589-4	SWITCH C3VA-2L	900
046	911233-1	PAN HEAD SCREW M5X20	30
047	188919-4	SWITCH HANDLE COVER SET	840
A01	152492-0	GRIP 36 COMPLETE	230
A02	763432-9	CHUCK KEY S13	230

SERVICE DRAWING

MODEL NO. DS5000

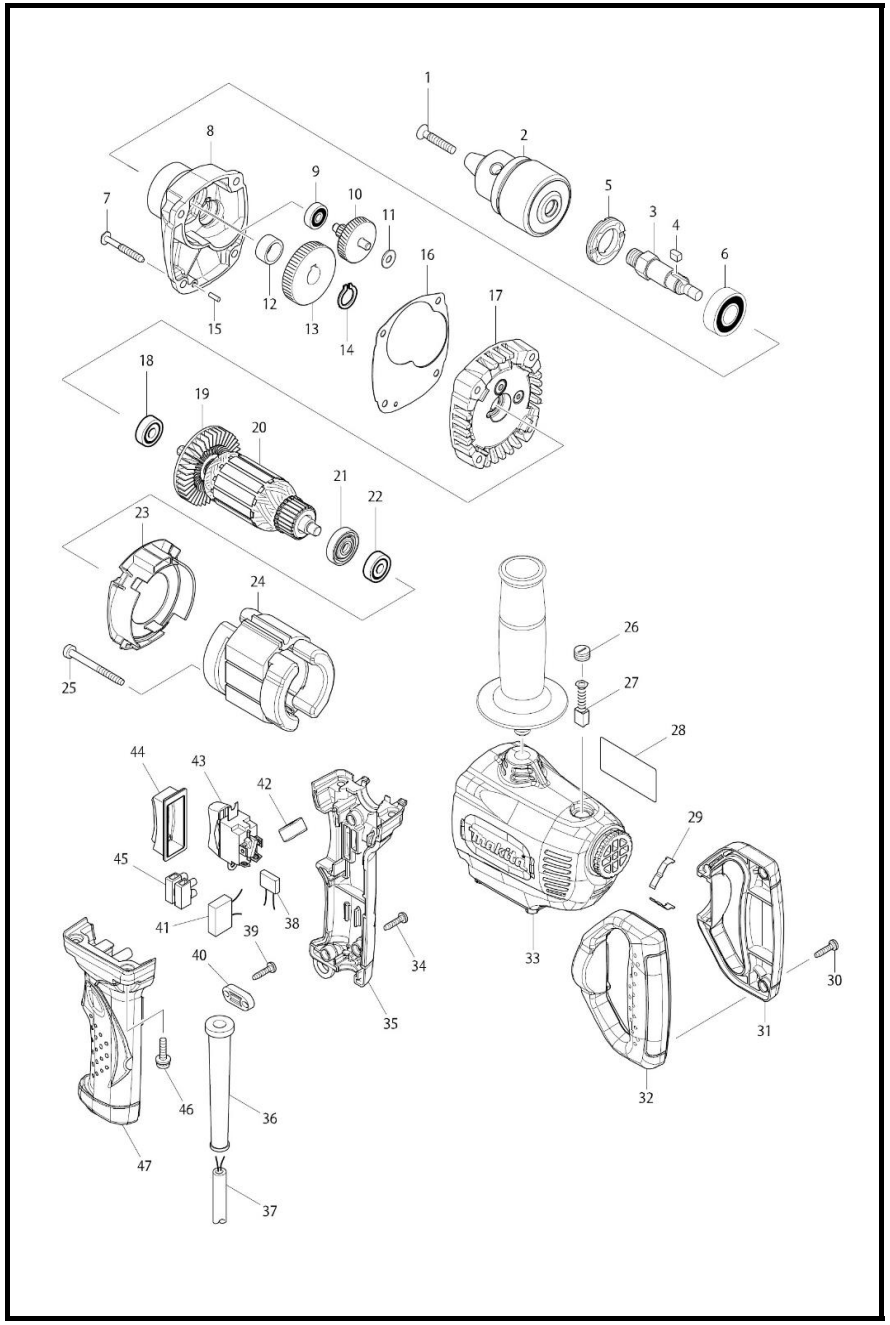

MODEL DS5000

ITEM	PARTS ID	DESCRIPTION	PRICE/BAHT
001	251425-3	- FLAT HEAD SCREW M6X22	90
002	763066-8	DRILL CHUCK S16	3,570
003	325494-1	SPINDLE	1,260
004	254211-1	KEY 5	80
005	285807-7	BEARING RETAINER 22-36	170
006	211206-7	BALL BEARING 6202LLB	460
007	266211-9	TAPPING SCREW 5X40	60
008	140620-9	GEAR HOUSING COMPLETE	1,000
009	211016-2	BALL BEARING 626LLB	320
010	226028-2	GEAR COMPLETE 7-41	1,140
011	261008-1	FIBER WASHER 6	30
012	257018-4	RING 15	150
013	221261-1	SPUR GEAR 47	720
014	961054-1	RETAINING RING S-14	30
015	256180-2	PIN 3	40
016	452066-0	GASKET	150
017	140619-4	GEAR HOUSING COVER COMPLETE	1,370
018	211031-6	BALL BEARING 608LLB	190
019	241850-6	FAN 60	
020	513808-8	ARMATURE ASS'Y 220V	
021	681659-8	INSULATION WASHER	120
022	211031-6	BALL BEARING 608LLB	190
023	452063-6	BAFFLE PLATE	90
024	525833-7	FIELD ASS'Y 220V	
025	266095-5	TAPPING SCREW 5X55	120
026	643550-8	BRUSH HOLDER CAP 5-8	100
027	B-80391	CARBON BRUSH SET CB-411A	
029	232260-8	LEAF SPRING	40
030	265995-6	TAPPING SCREW 4X18	40
031	188921-7	HANDLE SET	400
033	140621-7	MOTOR HOUSING COMPLETE	1,430
034	265995-6	TAPPING SCREW 4X18	40
035	188920-9	SWITCH HANDLE COVER SET	620
036	682566-8	CORD GUARD 10	80
037	691015-4	POWER SUPPLY CORD 0.75-2-2.5	740
039	265995-6	TAPPING SCREW 4X18	40
040	687053-2	STRAIN RELIEF	70
043	651564-3	SWITCH SL220SD-4	1,250
044	421297-2	DUST COVER	210
046	911233-1	PAN HEAD SCREW M5X20	30
047	188920-9	SWITCH HANDLE COVER SET	620
A01	152492-0	GRIP 36 COMPLETE	230
A02	763432-9	CHUCK KEY S13	230

SERVICE DRAWING

MODEL NO. EK7650H

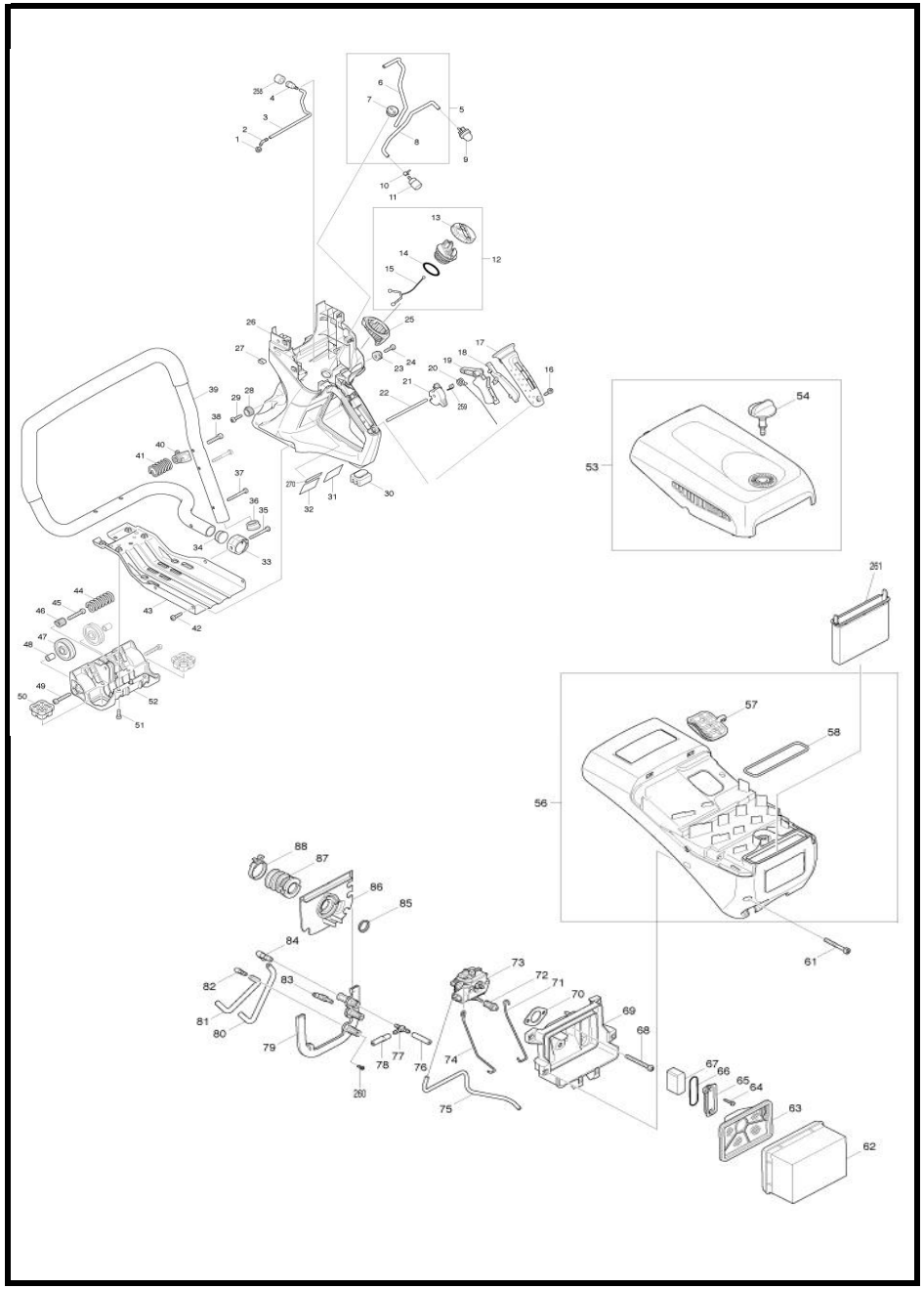

MODEL EK7650H

ITEM	PARTS ID	DESCRIPTION	PRICE/BAHT
001	421875-8	GROMMET	50
002	452800-8	HOSE JOINT 4-4	110
003	422083-4	TUBE 3-190	150
004	168396-6	BREATHER	370
005	142150-6	TUBE COMPLETE	300
006	422074-5	TUBE 3-120	110
007	424101-4	GROMMET	100
008	422119-9	TUBE 3-300	190
009	168398-2	PRIMER PUMP	320
010	324616-0	HOSE CLAMP	150
011	163447-0	GASOLINE FILTER	310
012	140831-6	TANK CAP COMPLETE	370
013	452697-5	TANK CAP KNOB	150
014	213080-9	O RING 29.5	110
015	450957-9	STRAP	40
016	266475-5	TAPPING SCREW TORX 5.5X20	40
017	452736-1	GRIP COVER	170
018	452722-2	LOCK OFF LEVER	130
019	452721-4	THROTTLE LEVER	140
020	233590-0	TORSION SPRING 12	90
021	452723-0	SWITCH LEVER	150
022	256520-4	ROD 5	80
023	452742-6	REAR INNER HOLDER	100
024	266475-5	TAPPING SCREW TORX 5.5X20	40
025	424408-8	TANK GUARD	150
026	898274-3	INDICATION LABEL	90
026	140774-2	TANK COMPLETE	3,060
027	424583-0	PLUG	70
028	452742-6	REAR INNER HOLDER	100
029	266475-5	TAPPING SCREW TORX 5.5X20	40
030	424404-6	REAR FOOT	120
031	869677-8	EK7650H NAME PLATE	
033	452737-9	CLAMP	120
034	424410-1	RUBBER CAP	90
035	266687-0	TAPPING SCREW 5.5X45	60
036	424410-1	RUBBER CAP	90
037	266687-0	TAPPING SCREW 5.5X45	60
038	266659-5	H.L. SOCKET HEAD BOLT M6X30	70
039	331940-4	FRONT HANDLE	5,270
040	452741-8	CENTER OUTER HOLDER	130
041	234214-1	COMPRESSION SPRING 16	130
042	266475-5	TAPPING SCREW TORX 5.5X20	40
043	346433-8	BOTTOM PLATE	2,140
044	234213-3	COMPRESSION SPRING 13	170
045	266659-5	H.L. SOCKET HEAD BOLT M6X30	70
046	452740-0	FRONT INNER HOLDER	100
047	318727-1	ROLLER 45	210
048	257972-2	SLEEVE 6.5	130
049	266660-0	H.L. SOCKET HEAD BOLT M6X35	70
050	424405-4	FRONT FOOT	140
051	266652-9	H.L. SOCKET HEAD BOLT M5X16	40
052	318712-4	GUARD	1,180
053	140903-7	TOP COVER COMPLETE	880
054	266692-7	THUMB SCREW M6X15	220
056	893210-4	CAUTION LABEL	220
056	893211-2	CAUTION LABEL	210
056	141040-0	FILTER COVER COMPLETE	1,180
057	424409-6	PLUG COVER	140
058	424417-7	PACKING	140
061	266656-1	H.L. SOCKET HEAD BOLT M5X40	110
062	442165-6	AIR FILTER	980
063	424399-3	INNER FILTER	390
064	266127-8	+ TAPPING SCREW PT 3X20	20
065	452739-5	SEPARATER COVER	110
066	213459-4	O RING 32	50
067	352012-2	SEPARATOR MESH	410
068	266657-9	H.L. SOCKET HEAD BOLT M5X45	80
069	452720-6	FILTER BRACKET	350
070	442166-4	CARBURATOR GASKET	60
071	326040-3	THROTTLE LINKAGE	90
072	424407-0	RUBBER JOINT	70
073	168653-2	CARBURETOR WT	5,620
074	326041-1	CHOKE LINKAGE	90
075	422077-9	TUBE 3-190	130
076	422080-0	TUBE 3-35	70
077	452952-5	HOSE JOINT	130
078	422079-5	TUBE 3-45	70
079	424418-5	SEAL	300
080	422082-6	TUBE 3-130	120
081	422081-8	TUBE 3-75	90
082	452951-7	HOSE JOINT 4-4	160
083	452799-7	HOSE JOINT 4-6	120
085	346397-6	GUIDE RING	110
086	452724-8	CARBURETOR MOUNT	170
087	424397-7	SUCTION LINE	1,130
088	346495-6	HOSE CLAMP 30	430
089	266654-5	H.L. SOCKET HEAD BOLT M5X25	50
090	140898-4	ROCKER COVER COMPLETE	460
091	422073-7	TUBE 3-8	40
092	318708-5	ROCKER COVER	220
093	452726-4	OIL LINE	260
094	345918-1	HOSE CLAMP	40
095	422078-7	TUBE 5-70	110
096	345918-1	HOSE CLAMP	40
097	422076-1	TUBE 3-170	190
098	126006-1	IGNITION COIL ASSEMBLY	2,440
099	424105-6	PLUG CAP	90
100	125920-8	IGNITION COIL	2,310
101	326148-3	PLUG CAP SPRING	220
102	168652-4	SPARK PLUG	760
103	125946-0	CYLINDER HEAD ASSEMBLY	5,660
104	140928-1	CYLINDER HEAD COMPLETE	4,950
105	331969-0	VALVE GUIDE	150
106	424424-0	VALVE STEM SEAL	130
107	266660-0	H.L. SOCKET HEAD BOLT M6X35	70

SERVICE DRAWING

MODEL NO. EK7650H

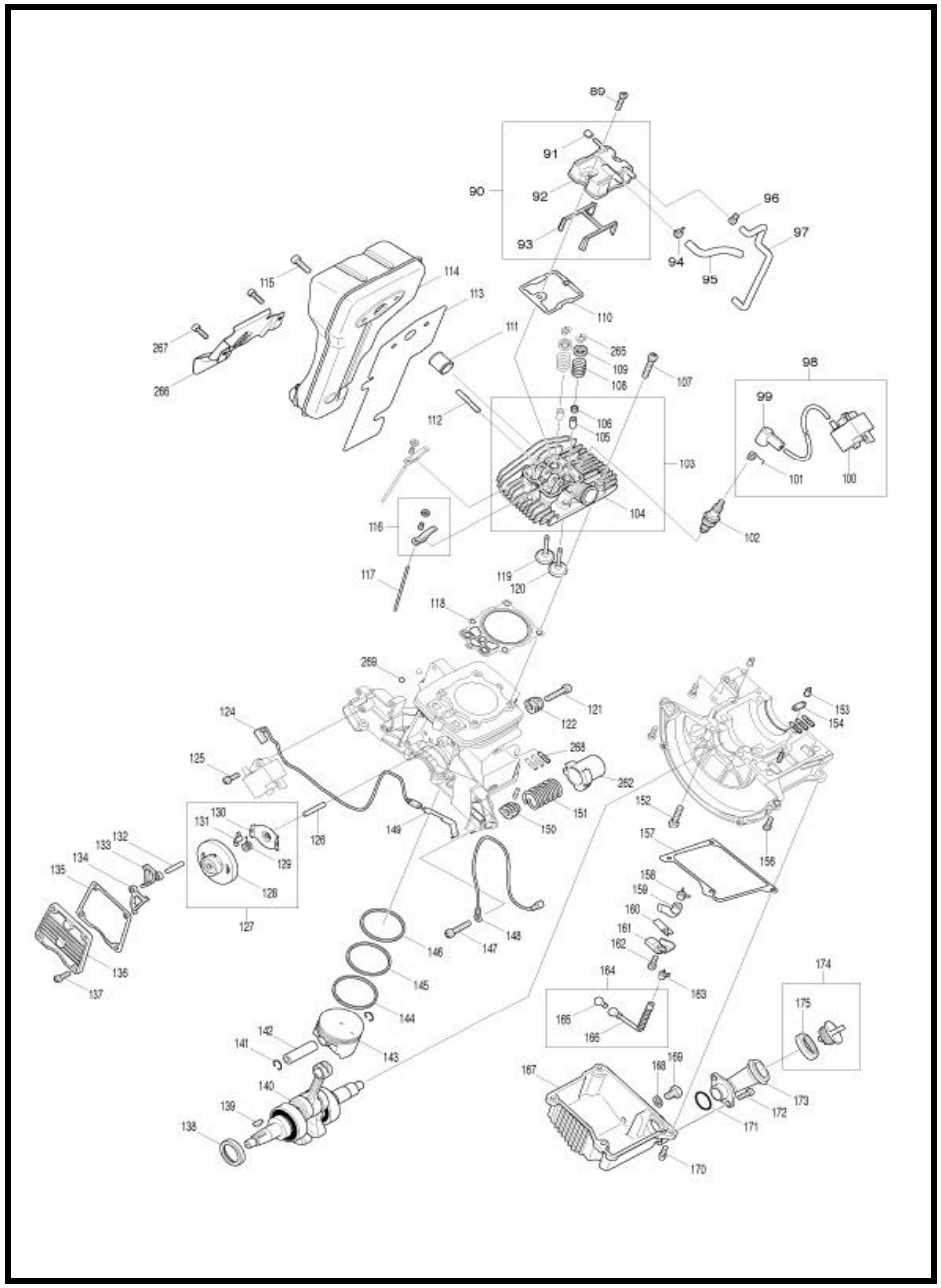

MODEL EK7650H

ITEM	PARTS ID	DESCRIPTION	PRICE/BAHT
108	234212-5	COMPRESSION SPRING 11	90
109	331966-6	RETAINER	110
110	346400-3	ROCKER COVER GASKET	140
111	331937-3	EXHAUST PORT SPACER	130
112	268310-3	PIN 5	90
113	346399-2	MUFFLER GASKET	340
114	168638-8	EXHAUST MUFFLER	2,010
115	266693-5	H.L. SOCKET HEAD BOLT M6X18	60
116	126005-3	ROCKER ARM ASSEMBLY	680
117	256526-2	PUSH ROD	120
118	442167-2	CYLINDER HEAD GASKET	290
119	331965-8	EXHAUST VALVE	710
120	331964-0	INTAKE VALVE	640
121	266659-5	H.L. SOCKET HEAD BOLT M6X30	70
122	318729-7	CENTER INNER HOLDER	220
123	140901-1	CYLINDER BLOCK COMPLETE	16,420
124	638776-5	LEAD UNIT	180
125	266652-9	H.L. SOCKET HEAD BOLT M5X16	40
126	256200-2	PIN 5	150
127	125934-7	CAM GEAR ASSEMBLY	
128	140817-0	CAM GEAR COMPLETE	1,160
129	233582-9	TORSION SPRING 9	
130	346434-6	CAM GEAR PLATE	400
131	318707-7	FLY WEIGHT	120
132	256186-0	PIN 5	150
133	313209-8	CAM LIFTER L	260
134	313210-3	CAM LIFTER R	260
135	442168-0	CAM GEAR GASKET	200
136	318725-5	CAM GEAR COVER	300
137	266652-9	H.L. SOCKET HEAD BOLT M5X16	40
138	213599-8	OIL SEAL 17	480
139	254001-2	WOODRUFF KEY 4	80
140	140900-3	CRANKSHAFT COMPLETE	5,340
141	233995-4	RING SPRING 12	20
142	326039-8	PISTON PIN	180
143	318726-3	PISTON	860
144	257332-8	SECOND RING	600
145	257333-6	OIL RING	500
146	257331-0	TOP RING	600
147	266659-5	H.L. SOCKET HEAD BOLT M6X30	70
148	638777-3	LEAD UNIT	180
149	232268-2	CONTACT SPRING	90
150	318730-2	REAR OUTER HOLDER	220
151	234214-1	COMPRESSION SPRING 16	130
152	266659-5	H.L. SOCKET HEAD BOLT M6X30	70
153	424201-0	CHECK VALVE	170
154	424406-2	GROMMET	130
156	266652-9	H.L. SOCKET HEAD BOLT M5X16	40
157	452738-7	OIL CASE GASKET	310
158	345918-1	HOSE CLAMP	40
159	422084-2	TUBE 5-55	90
160	346398-4	LEAD VALVE	110
161	318709-3	RETAINER PLATE	200

ITEM	PARTS ID	DESCRIPTION	PRICE/BAHT
162	266652-9	H.L. SOCKET HEAD BOLT M5X16	40
163	345918-1	HOSE CLAMP	40
164	168655-8	OIL TUBE COMPLETE	390
165	326177-6	OIL WEIGHT	190
166	424384-6	OIL TUBE	440
167	318710-8	OIL CASE	960
168	346452-4	GASKET	20
169	921412-3	HEX. BOLT M8X12	80
170	266652-9	H.L. SOCKET HEAD BOLT M5X16	40
171	213548-5	O-RING 20	90
172	266862-8	H.L.S.H. BOLT M5X16 WITH WR	70
173	452614-5	OIL PIPE	350
174	140899-2	OIL CAP COMPLETE	170
175	424421-6	OIL CAP GASKET	110
176	318704-3	FLYWHEEL	1,650
177	264054-3	FLANGE NUT M10	60
178	452617-9	CYLINDER COVER	330
179	266652-9	H.L. SOCKET HEAD BOLT M5X16	40
180	452616-1	FAN COVER	740
181	266655-3	H.L. SOCKET HEAD BOLT M5X30	100
182	266659-5	H.L. SOCKET HEAD BOLT M6X30	70
183	318728-9	FRONT OUTER HOLDER	260
184	267448-1	FLAT WASHER 41	130
185	213598-0	OIL SEAL(L)	390
186	318711-6	CUTTING ARM	1,640
187	234214-1	COMPRESSION SPRING 16	130
188	318730-2	REAR OUTER HOLDER	220
189	266659-5	H.L. SOCKET HEAD BOLT M6X30	70
190	266658-7	H.L. SOCKET HEAD BOLT M6X25	60
191	225094-6	V BELT 5-800	1,870
192	331970-5	SPACER17	310
193	125945-2	CLUTCH DRUM ASSEMBLY	2,340
194	165636-3	CLUTCH DRUM	1,810
195	962163-9	RETAINING RING R-35	110
196	210138-5	BALL BEARING 6003LLU	490
197	331970-5	SPACER17	310
198	168834-8	CLUTCH COMPLETE	2,610
199	231884-7	TENSION SPRING 6	270
200	313207-2	CLUTCH SHOE	740
201	313208-0	CLUTCH HOLDER	1,030
202	893120-5	EK7650H MODEL NO.LABEL	100
203	266792-3	-H.L. SOCKET HEAD BOLT M5X18	100
204	125919-3	STARTER ASSEMBLY	2,740
205	424501-8	STARTER KNOB	830
206	332046-1	ROPE GUIDE	1,130
207	452613-7	STARTER CASE	1,030
208	232262-4	SPIRAL SPRING	410
209	444040-2	STARTER ROPE	830
210	424500-0	ROPE STOPPER	210
211	453466-7	REEL	390
212	266634-1	SET SCREW M6X20	120
213	452930-5	HOLDER	60
214	266653-7	H.L. SOCKET HEAD BOLT M5X20	70

SERVICE DRAWING

MODEL NO. EK7650H

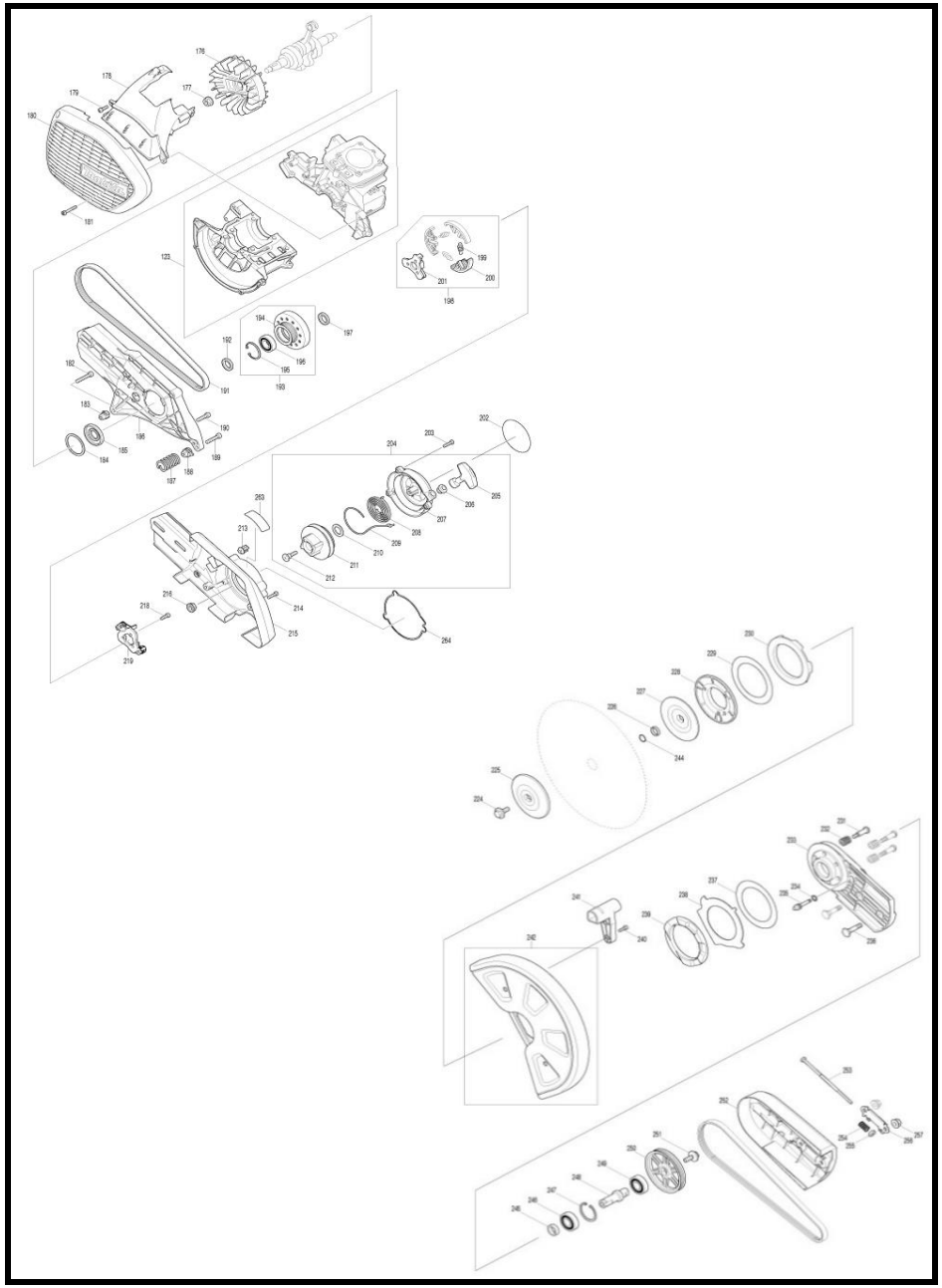

MODEL EK7650H

ITEM	PARTS ID	DESCRIPTION	PRICE/BAHT
215	452621-8	CLUTCH COVER	
216	264080-2	HEX. LOCK NUT M10-17	150
218	266784-2	H.L. SOCKET HEAD BOLT M5X12	40
219	140816-2	RATCHET COMPLETE	4,160
224	266690-1	HEX. BOLT M8X25	150
225	224443-4	FLANGE 102	580
226	257314-0	RING 17	130
227	224443-4	FLANGE 102	580
228	318746-7	PRESSURE RING	1,070
229	442169-8	SLIDING DISC	180
230	424426-6	RUBBER RING(INNER)	210
231	266689-6	H.L.COLLRAR BOLT M6	110
232	234216-7	COMPRESSION SPRING 8	90
233	318722-1	CUTTING DEVICE	1,330
234	213625-3	O-RING 9	40
235	326038-0	LOCK SHAFT	260
236	266688-8	HEX. BOLT M8	110
237	442169-8	SLIDING DISC	180
238	346455-8	IMPACT PLATE	370
239	424427-4	RUBBER RING(OUTER)	210
240	266725-8	-H.L.SOCKET HEAD BOLT M5X16	40
241	452938-9	GRIP	150
242	140925-7	HOOD COMPLETE	4,210
242	893215-4	CAUTION LABEL	400
244	213162-7	O RING 14	30
245	257971-4	RING 17	110
246	211281-3	BALL BEARING 6203LLU	520
247	962157-4	RETAINING RING R-40	110
248	326062-3	SPINDLE	460
249	211281-3	BALL BEARING 6203LLU	520
250	222174-9	V PULLEY 5-95.8	470
251	266690-1	HEX. BOLT M8X25	150
252	452698-3	BELT COVER	
253	266691-9	TENSIONING SCREW M6	160
254	234215-9	COMPRESSION SPRING 6	130
255	252157-5	SQUARE NUT M6	30
256	346457-4	PLATE	280
257	264081-0	HEX. NUT M8	60
258	424023-8	SPONGE SLEEVE 9	70
259	346554-6	PLATE	140
260	424316-3	CHECK VALVE	220
261	166106-5	DUST BAG	330
262	424499-9	RUBBER SLEEVE 22	120
263	800E23-6	CAUTION LABEL	70
264	346611-0	STARTER COVER GASKET	270
265	331967-4	COTTER	70
266	346589-7	MUFFLER GUARD	1,140
267	266782-6	H.L.S. HEAD BOLT M5X16 WITH WG	90
268	325665-0	JOINT PIPE	90
269	331897-9	BALL	30
270	897179-4	SERIAL NO. LABEL	
A01	195488-8	TOOL KIT	540

ITEM	PARTS ID	DESCRIPTION	PRICE/BAHT
A01	782236-0	WRENCH 13-16	450
A01	831340-3	TOOL BAG	230
A01	782025-3	TORX WRENCH	90
A02	195532-1	OIL BOTTLE SET	690
A03	452930-5	HOLDER	60
A03	126068-9	WATER SET PART	1,790
A03	195534-7	WATER SET	2,690
A03	123121-2	COUPLING SLEEVE	260
A03	266707-0	H.L.SOCKET HEAD BOLT M5X10	80
A04	195945-6	PRE FILTER SET	900
E01	898428-2	CAUTION PLATE	120
E02	898748-4	CAUTION TAG	680
E03	898855-3	CAUTION TAG	330

SERVICE DRAWING

MODEL NO. GA4030

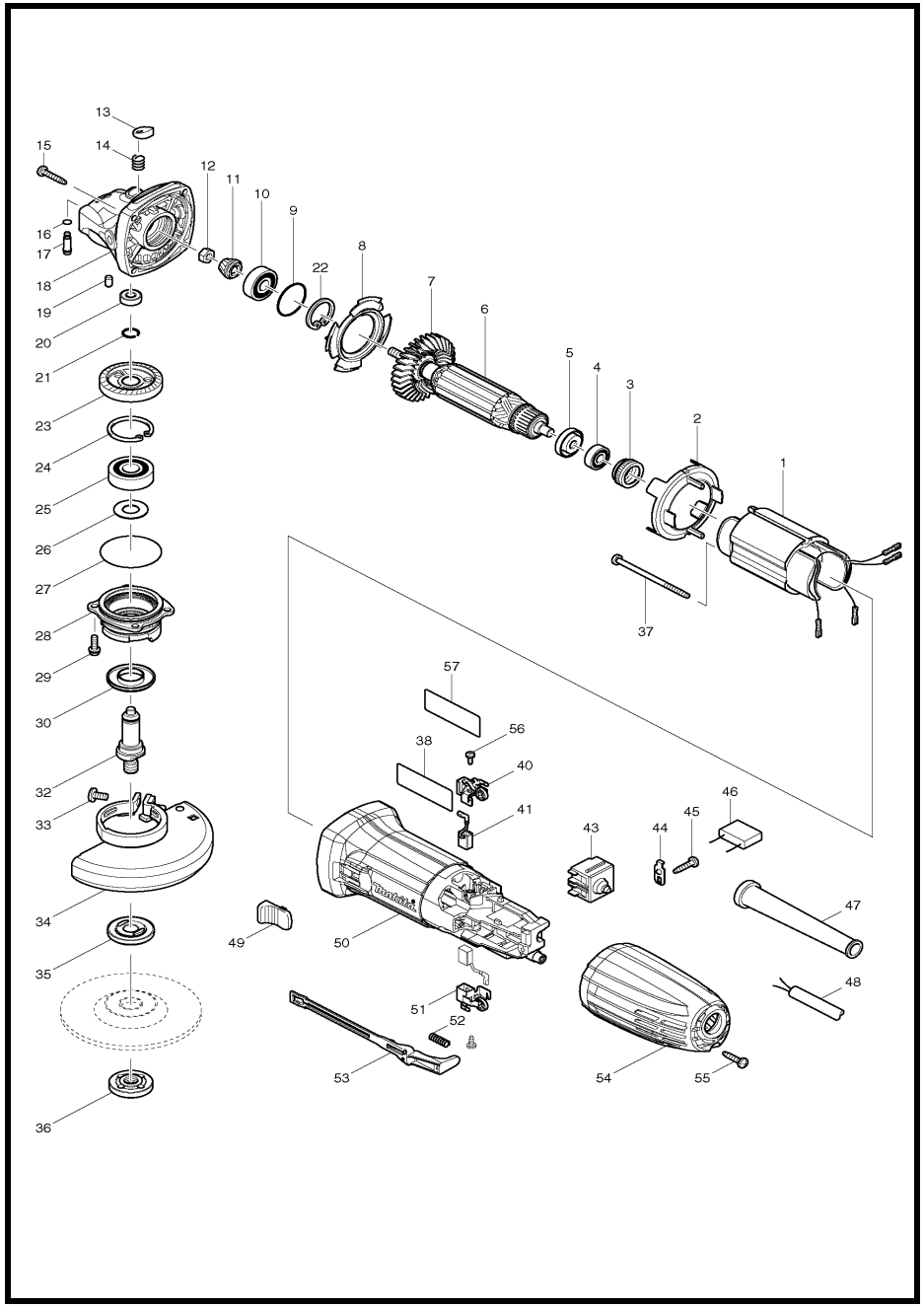

MODEL GA4030

ITEM	PARTS ID	DESCRIPTION	PRICE/BAHT
001	623533-4	FIELD 220-240V	
002	450796-7	BAFFLE PLATE	90
003	421868-5	LABYRINTH RUBBER RING 19	100
004	211021-9	BALL BEARING 607LLB	240
005	681636-0	INSULATION WASHER	60
006	510182-5	ARMATURE ASS'Y 220V	
008	413126-3	GUIDE PLATE	50
009	213445-5	O-RING 26	30
010	211092-6	BALL BEARING 629DDW	330
011	227545-5	SPIRAL BEVEL GEAR 10	230
012	252186-8	HEX. NUT M6	70
013	417771-6	PIN CAP	110
014	234057-1	COMPRESSION SPRING 8	70
015	266324-6	TAPPING SCREW 4X22	30
016	213032-0	O RING 4	40
017	256510-7	SHOULDER PIN 4	90
018	318335-8	GEAR HOUSING	390
019	263002-9	RUBBER PIN 4	30
020	210006-2	BALL BEARING 696ZZ	310
021	233950-6	RING SPRING 11	80
022	962105-3	RETAINING RING R-26	80
023	227546-3	SPIRAL BEVEL GEAR 37	390
024	962151-6	RETAINING RING R-32	90
025	211129-9	BALL BEARING 6201DDW	300
026	267113-2	FLAT WASHER 12	30
027	213561-3	O RING 42	80
028	318336-6	BEARING BOX	230
029	265099-4	PAN HEAD SCREW M4X14	70
030	345464-4	LABYRINTH RING	100
032	324956-6	SPINDLE	230
033	265180-1	PAN HEAD SCREW M5X16	50
034	122885-5	WHEEL COVER 100K ASS'Y	320
035	224314-5	INNER FLANGE 30	330
036	224559-5	LOCK NUT 10-30	170
037	266325-4	TAPPING SCREW 4X70	30
040	643839-4	BRUSH HOLDER 6X9	130
041	195027-4	CARBON BRUSH CB-459/460	
043	650621-4	SWITCH PS10	220
044	687682-1	STRAIN RELIEF	50
045	266326-2	TAPPING SCREW 4X18	30
047	682566-8	CORD GUARD 10	80
048	691015-4	POWER SUPPLY CORD 0.75-2-2.5	740
049	419566-3	SWITCH KNOB	100
050	450795-9	MOTOR HOUSING	410
051	643839-4	BRUSH HOLDER 6X9	130
052	233121-5	COMPRESSION SPRING 4	60
053	450797-5	SWITCH LEVER	90
054	450794-1	REAR COVER	200
055	266326-2	TAPPING SCREW 4X18	30
056	266492-5	TAPPING SCREW 3X8	50
A01	153504-2	GRIP 36 COMPLETE	280
A02	782420-7	LOCK NUT WRENCH 20	130

SERVICE DRAWING

MODEL NO. GA4031

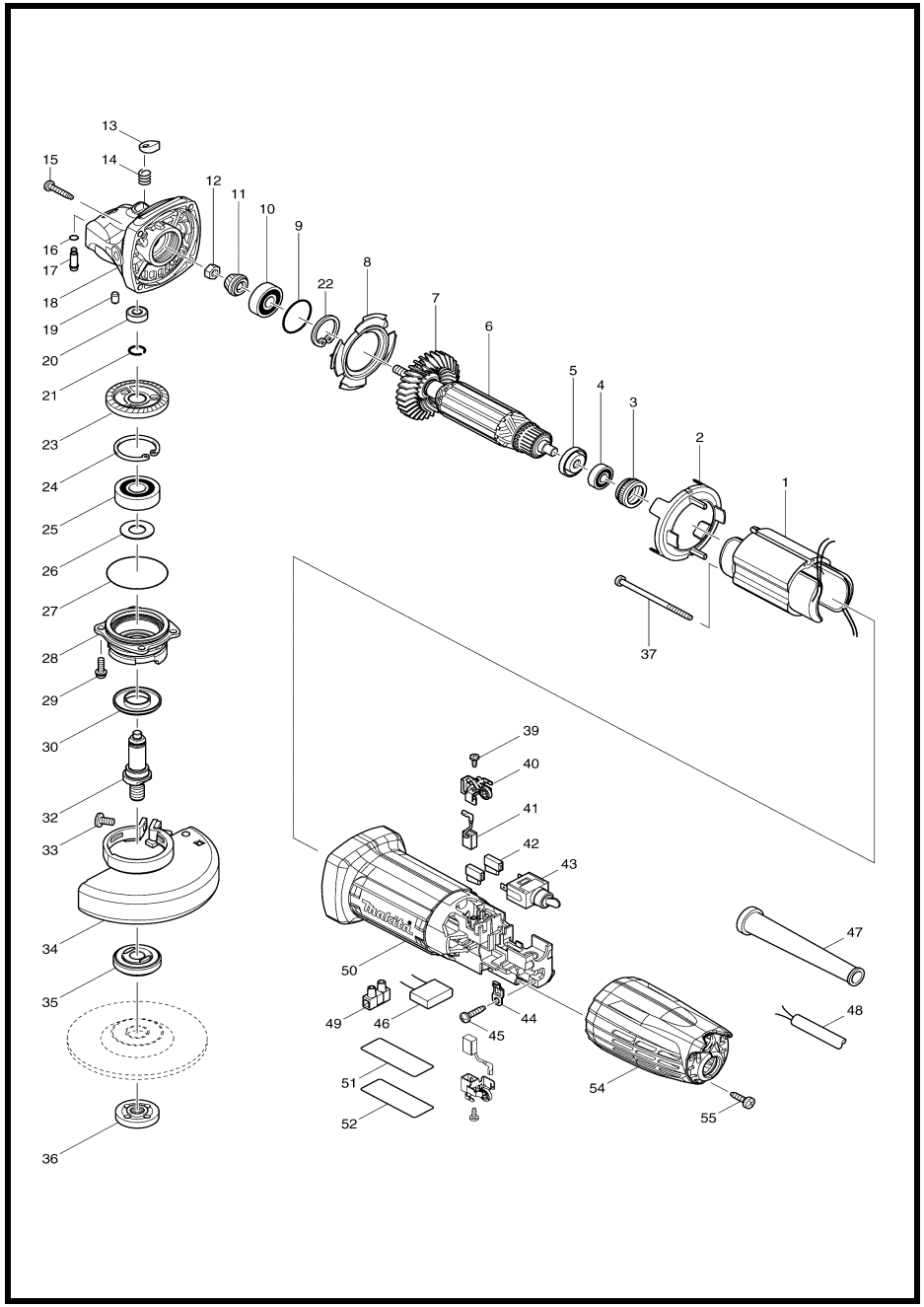

MODEL GA4031

ITEM	PARTS ID	DESCRIPTION	PRICE/BAHT
001	623538-4	FIELD 220-240V	
002	450796-7	BAFFLE PLATE	90
003	421868-5	LABYRINTH RUBBER RING 19	100
004	211021-9	BALL BEARING 607LLB	240
005	681636-0	INSULATION WASHER	60
006	510182-5	ARMATURE ASS'Y 220V	
008	413126-3	GUIDE PLATE	50
009	213445-5	O-RING 26	30
010	211092-6	BALL BEARING 629DDW	330
011	227545-5	SPIRAL BEVEL GEAR 10	230
012	252186-8	HEX. NUT M6	70
013	417771-6	PIN CAP	110
014	234057-1	COMPRESSION SPRING 8	70
015	266324-6	TAPPING SCREW 4X22	30
016	213032-0	O RING 4	40
017	256510-7	SHOULDER PIN 4	90
018	318335-8	GEAR HOUSING	390
019	263002-9	RUBBER PIN 4	30
020	210006-2	BALL BEARING 696ZZ	310
021	233950-6	RING SPRING 11	80
022	962105-3	RETAINING RING R-26	80
023	227546-3	SPIRAL BEVEL GEAR 37	390
024	962151-6	RETAINING RING R-32	90
025	211129-9	BALL BEARING 6201DDW	300
026	267113-2	FLAT WASHER 12	30
027	213561-3	O RING 42	80
028	318336-6	BEARING BOX	230
029	265099-4	PAN HEAD SCREW M4X14	70
030	345464-4	LABYRINTH RING	100
032	324956-6	SPINDLE	230
033	265180-1	PAN HEAD SCREW M5X16	50
034	125885-4	WHEEL COVER 100AK ASS'Y	370
035	224314-5	INNER FLANGE 30	330
036	224559-5	LOCK NUT 10-30	170
037	266325-4	TAPPING SCREW 4X70	30
039	266492-5	TAPPING SCREW 3X8	50
040	643839-4	BRUSH HOLDER 6X9	130
041	195027-4	CARBON BRUSH CB-459/460	
042	686039-3	RECEPTACLE SLEEVE	30
043	651426-5	SWITCH STL115ADF-AD	230
044	687682-1	STRAIN RELIEF	50
045	266326-2	TAPPING SCREW 4X18	30
047	682566-8	CORD GUARD 10	80
048	691015-4	POWER SUPPLY CORD 0.75-2-2.5	740
050	451380-1	MOTOR HOUSING	350
054	451381-9	REAR COVER	210
055	266385-6	TAPPING SCREW 4X14	70
A01	782420-7	LOCK NUT WRENCH 20	130
A03	153504-2	GRIP 36 COMPLETE	280

SERVICE DRAWING

MODEL NO. GA5010

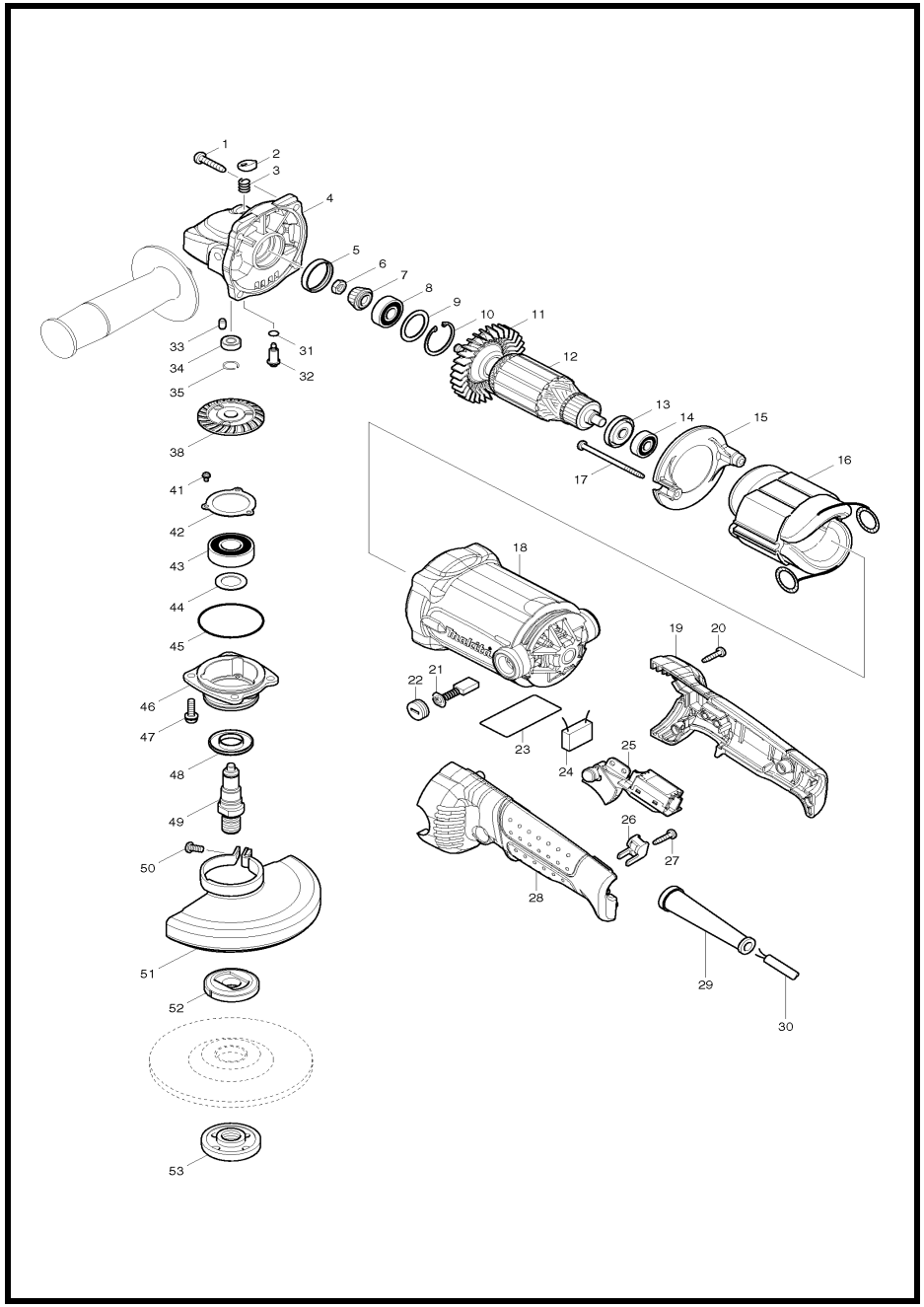

MODEL GA5010

ITEM	PARTS ID	DESCRIPTION	PRICE/BAHT
001	266459-3	TAPPING SCREW 5X25	50
002	417771-6	PIN CAP	110
003	234057-1	COMPRESSION SPRING 8	70
004	318158-4	GEAR HOUSING	540
005	262132-3	RUBBER RING 27	60
006	264010-3	HEX.NUT M7	70
007	227517-0	SPIRAL BEVEL GEAR 13	290
008	210059-1	BALL BEARING 6000DDW	300
009	267352-4	FLAT WASHER 22	60
010	962107-9	RETAINING RING (INT) R-30	80
012	510195-6	ARMATURE ASS'Y 220V	
013	681644-1	INSULATION WASHER	60
014	210005-4	BALL BEARING 608DDW	240
015	419961-7	BAFFLE PLATE	110
016	525768-2	FIELD ASS'Y 220-240V	
017	266340-8	TAPPING SCREW 4X65	70
018	158278-0	MOTOR HOUSING COMPLETE	740
019	188291-4	HANDLE SET	560
020	266326-2	TAPPING SCREW 4X18	30
021	B-80379	CARBON BRUSH SET CB-303A	190
022	643750-0	BRUSH HOLDER CAP	70
025	651193-2	SWITCH TG933TR-1	880
026	687261-5	STRAIN RELIEF	70
027	266326-2	TAPPING SCREW 4X18	30
028	188291-4	HANDLE SET	560
029	682574-9	CORD GUARD 10-90	90
030	691015-4	POWER SUPPLY CORD 0.75-2-2.5	740
031	213977-2	O RING 7	70
032	256505-0	SHOULDER PIN 5	90
033	263002-9	RUBBER PIN 4	30
034	210006-2	BALL BEARING 696ZZ	310
035	233950-6	RING SPRING 11	80
038	227518-8	SPIRAL BEVEL GEAR 34 A	510
041	911003-8	PAN HEAD SCREW M3X6	100
042	285728-3	BEARING RETAINER 39	60
043	211228-7	BALL BEARING 6202DDW	430
044	253853-8	FLAT WASHER 15	110
045	213624-5	O RING 48	60
046	318333-2	BEARING BOX	330
047	265131-4	PAN HEAD SCREW M5X18	40
048	345464-4	LABYRINTH RING	100
049	324786-5	SPINDLE	380
050	265180-1	PAN HEAD SCREW M5X16	50
051	123099-9	WHEEL COVER 125AK ASSEMBLY	410
052	224415-9	INNER FLANGE 42	200
053	224554-5	LOCK NUT 14-45	250
A01	153504-2	GRIP 36 COMPLETE	280
A02	782423-1	LOCK NUT WRENCH 35	170

SERVICE DRAWING

MODEL NO. GA5020

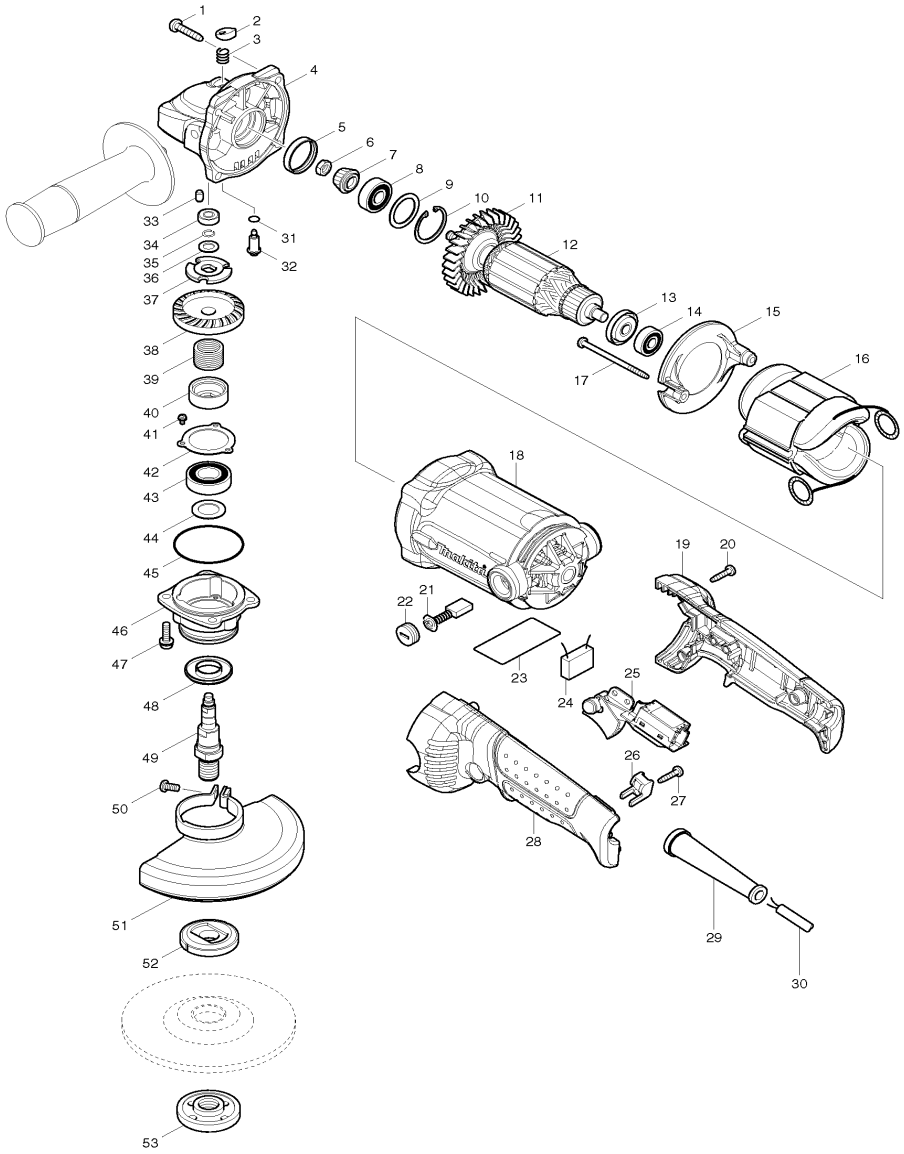

MODEL GA5020

ITEM	PARTS ID	DESCRIPTION	PRICE/BAHT
001	266459-3	TAPPING SCREW 5X25	50
002	417771-6	PIN CAP	110
003	234057-1	COMPRESSION SPRING 8	70
004	318158-4	GEAR HOUSING	540
005	262132-3	RUBBER RING 27	60
006	264010-3	HEX.NUT M7	70
007	227517-0	SPIRAL BEVEL GEAR 13	290
008	210059-1	BALL BEARING 6000DDW	300
009	267352-4	FLAT WASHER 22	60
010	962107-9	RETAINING RING (INT) R-30	80
012	510195-6	ARMATURE ASS'Y 220V	
013	681644-1	INSULATION WASHER	60
014	210005-4	BALL BEARING 608DDW	240
015	419961-7	BAFFLE PLATE	110
016	525768-2	FIELD ASS'Y 220-240V	
017	266340-8	TAPPING SCREW 4X65	70
018	158278-0	MOTOR HOUSING COMPLETE	740
019	188291-4	HANDLE SET	560
020	266326-2	TAPPING SCREW 4X18	30
021	B-80379	CARBON BRUSH SET CB-303A	190
022	643750-0	BRUSH HOLDER CAP	70
025	651193-2	SWITCH TG933TR-1	880
026	687261-5	STRAIN RELIEF	70
027	266326-2	TAPPING SCREW 4X18	30
028	188291-4	HANDLE SET	560
029	682574-9	CORD GUARD 10-90	90
030	691015-4	POWER SUPPLY CORD 0.75-2-2.5	740
031	213977-2	O RING 7	70
032	256505-0	SHOULDER PIN 5	90
033	263002-9	RUBBER PIN 4	30
034	210006-2	BALL BEARING 696ZZ	310
035	233926-3	RING SPRING 7	140
036	253835-0	FLAT WASHER 8	60
037	267811-8	LOCK WASHER	150
038	227519-6	SPIRAL BEVEL GEAR 34B	570
039	233957-2	LOCK SPRING 16	360
040	324833-2	LOCK SLEEVE	240
041	911003-8	PAN HEAD SCREW M3X6	100
042	285728-3	BEARING RETAINER 39	60
043	211236-8	BALL BEARING 6002DDW	550
044	253853-8	FLAT WASHER 15	110
045	213624-5	O RING 48	60
046	318332-4	BEARING BOX	380
047	265131-4	PAN HEAD SCREW M5X18	40
048	345464-4	LABYRINTH RING	100
049	324789-9	SPINDLE	650
050	265180-1	PAN HEAD SCREW M5X16	50
051	125419-3	WHEEL COVER 125 ASS'Y	290
052	224415-9	INNER FLANGE 42	200
053	224554-5	LOCK NUT 14-45	250
A01	153504-2	GRIP 36 COMPLETE	280
A02	782423-1	LOCK NUT WRENCH 35	170

SERVICE DRAWING

MODEL NO. GA6010

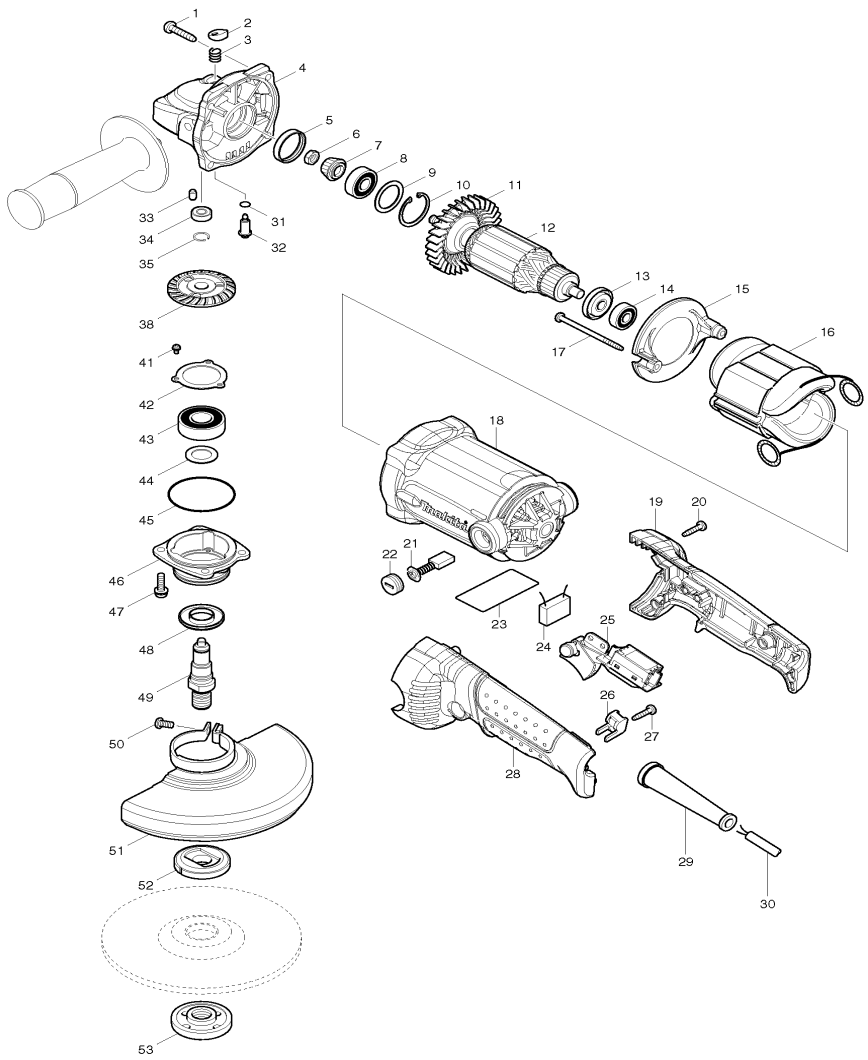

MODEL GA6010

ITEM	PARTS ID	DESCRIPTION	PRICE/BAHT
001	266459-3	TAPPING SCREW 5X25	50
002	417771-6	PIN CAP	110
003	234057-1	COMPRESSION SPRING 8	70
004	318158-4	GEAR HOUSING	540
005	262132-3	RUBBER RING 27	60
006	264010-3	HEX.NUT M7	70
007	227520-1	SPIRAL BEVEL GEAR 11	300
008	210059-1	BALL BEARING 6000DDW	300
009	267352-4	FLAT WASHER 22	60
010	962107-9	RETAINING RING (INT) R-30	80
012	510195-6	ARMATURE ASS'Y 220V	
013	681644-1	INSULATION WASHER	60
014	210005-4	BALL BEARING 608DDW	240
015	419961-7	BAFFLE PLATE	110
016	525768-2	FIELD ASS'Y 220-240V	
017	266340-8	TAPPING SCREW 4X65	70
018	158278-0	MOTOR HOUSING COMPLETE	740
019	188291-4	HANDLE SET	560
020	266326-2	TAPPING SCREW 4X18	30
021	B-80379	CARBON BRUSH SET CB-303A	190
022	643750-0	BRUSH HOLDER CAP	70
025	651193-2	SWITCH TG933TR-1	880
026	687261-5	STRAIN RELIEF	70
027	266326-2	TAPPING SCREW 4X18	30
028	188291-4	HANDLE SET	560
029	682574-9	CORD GUARD 10-90	90
030	691015-4	POWER SUPPLY CORD 0.75-2-2.5	740
031	213977-2	O RING 7	70
032	256505-0	SHOULDER PIN 5	90
033	263002-9	RUBBER PIN 4	30
034	210006-2	BALL BEARING 696ZZ	310
035	233950-6	RING SPRING 11	80
038	227521-9	SPIRAL BEVEL GEAR 35A	550
041	911003-8	PAN HEAD SCREW M3X6	100
042	285728-3	BEARING RETAINER 39	60
043	211228-7	BALL BEARING 6202DDW	430
044	253853-8	FLAT WASHER 15	110
045	213624-5	O RING 48	60
046	318300-7	BEARING BOX	270
047	265131-4	PAN HEAD SCREW M5X18	40
048	345464-4	LABYRINTH RING	100
049	324786-5	SPINDLE	380
050	265180-1	PAN HEAD SCREW M5X16	50
051	135192-7	WHEEL COVER 150 ASSEMBLY	540
052	224415-9	INNER FLANGE 42	200
053	224554-5	LOCK NUT 14-45	250
A01	153504-2	GRIP 36 COMPLETE	280
A02	782423-1	LOCK NUT WRENCH 35	170

SERVICE DRAWING

MODEL NO. GA6020

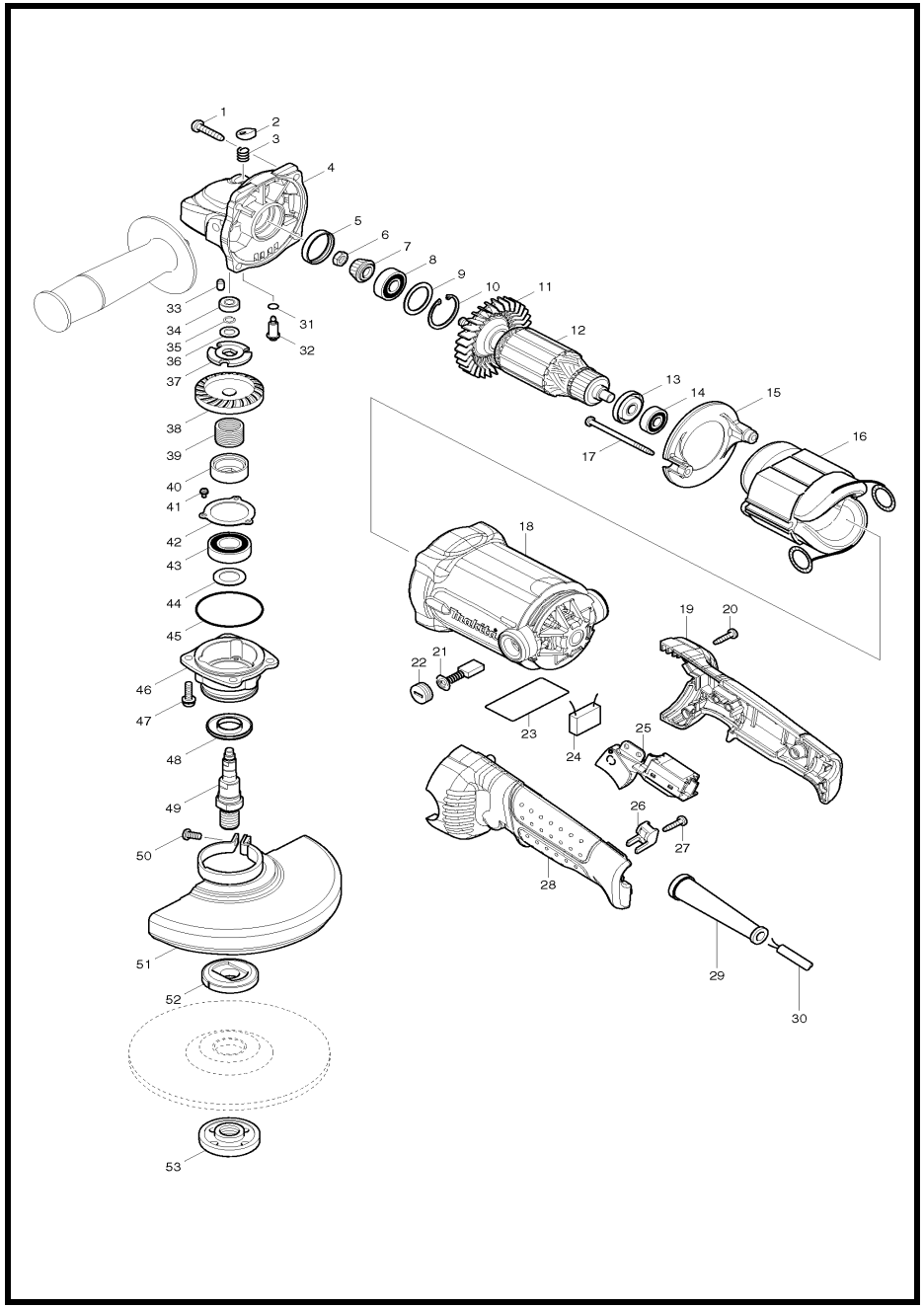

MODEL GA6020

ITEM	PARTS ID	DESCRIPTION	PRICE/BAHT
001	266459-3	TAPPING SCREW 5X25	50
002	417771-6	PIN CAP	110
003	234057-1	COMPRESSION SPRING 8	70
004	318158-4	GEAR HOUSING	540
005	262132-3	RUBBER RING 27	60
006	264010-3	HEX.NUT M7	70
007	227520-1	SPIRAL BEVEL GEAR 11	300
008	210059-1	BALL BEARING 6000DDW	300
009	267352-4	FLAT WASHER 22	60
010	962107-9	RETAINING RING (INT) R-30	80
012	510195-6	ARMATURE ASS'Y 220V	
013	681644-1	INSULATION WASHER	60
014	210005-4	BALL BEARING 608DDW	240
015	419961-7	BAFFLE PLATE	110
016	525768-2	FIELD ASS'Y 220-240V	
017	266340-8	TAPPING SCREW 4X65	70
018	158278-0	MOTOR HOUSING COMPLETE	740
019	188291-4	HANDLE SET	560
020	266326-2	TAPPING SCREW 4X18	30
021	B-80379	CARBON BRUSH SET CB-303A	190
022	643750-0	BRUSH HOLDER CAP	70
023	863618-6	GA6020 NAME PLATE	80
025	651193-2	SWITCH TG933TR-1	880
026	687261-5	STRAIN RELIEF	70
027	266326-2	TAPPING SCREW 4X18	30
028	188291-4	HANDLE SET	560
029	682574-9	CORD GUARD 10-90	90
030	691015-4	POWER SUPPLY CORD 0.75-2-2.5	740
031	213977-2	O RING 7	70
032	256505-0	SHOULDER PIN 5	90
033	263002-9	RUBBER PIN 4	30
034	210006-2	BALL BEARING 696ZZ	310
035	233926-3	RING SPRING 7	140
036	253835-0	FLAT WASHER 8	60
037	267811-8	LOCK WASHER	150
038	227522-7	SPIRAL BEVEL GEAR 35B	550
039	233957-2	LOCK SPRING 16	360
040	324833-2	LOCK SLEEVE	240
041	911003-8	PAN HEAD SCREW M3X6	100
042	285728-3	BEARING RETAINER 39	60
043	211236-8	BALL BEARING 6002DDW	550
044	253853-8	FLAT WASHER 15	110
045	213624-5	O RING 48	60
046	318299-6	BEARING BOX	320
047	265131-4	PAN HEAD SCREW M5X18	40
048	345464-4	LABYRINTH RING	100
049	324789-9	SPINDLE	650
050	265180-1	PAN HEAD SCREW M5X16	50
051	135192-7	WHEEL COVER 150 ASSEMBLY	540
052	224415-9	INNER FLANGE 42	200
053	224554-5	LOCK NUT 14-45	250
054	892226-6	CLEAR LABEL	
A01	153504-2	GRIP 36 COMPLETE	280
A02	782423-1	LOCK NUT WRENCH 35	170

SERVICE DRAWING

MODEL NO. GA7001

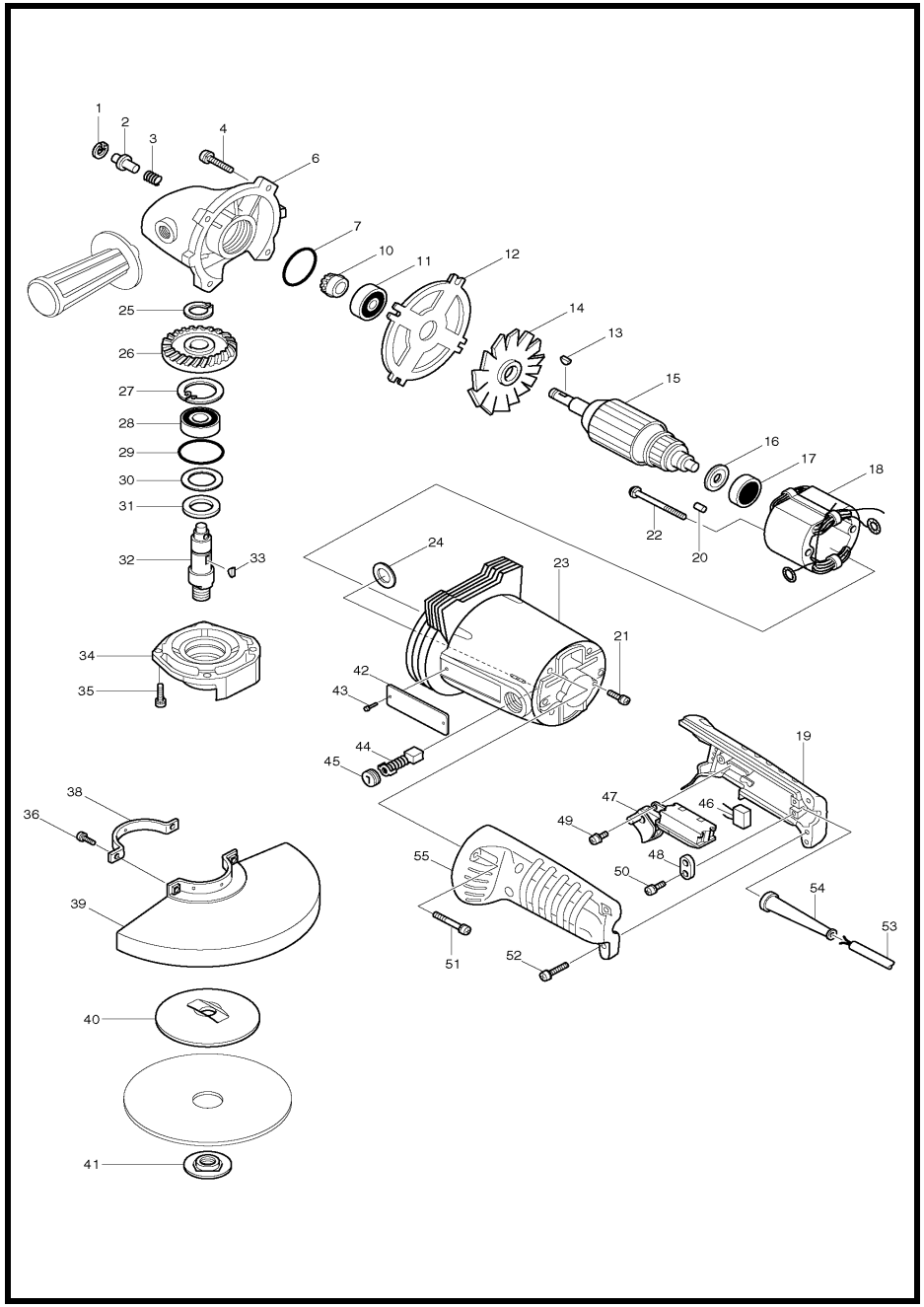

MODEL GA7001

ITEM	PARTS ID	DESCRIPTION	PRICE/BAHT
001	962062-5	RETAINING RING R-12	50
002	256615-3	PIN 6	90
003	231037-8	COMPRESSION SPRING 7	20
004	911236-5	PAN HEAD SCREW M5X22	30
006	156781-5	GEAR HOUSING	2,810
007	213506-1	O RING 36	80
010	221169-9	SPIRAL BEVEL GEAR 15	1,640
011	211111-8	BALL BEARING 6301LLB	550
012	341706-4	PLATE	320
013	254038-9	WOODRUFF KEY 4	80
015	514688-5	ARMATURE ASS'Y 220V	
016	213051-6	DUST SEAL 10	120
017	211068-3	BALL BEARING 6200LB	370
018	524798-0	FIELD ASS'Y 220V	
019	181390-1	HANDLE SET	1,040
020	263002-9	RUBBER PIN 4	30
021	652014-1	PAN HEAD SCREW M4X8	30
022	911290-9	PAN HEAD SCREW M5X65	100
023	156780-7	MOTOR HOUSING COMPLETE	4,380
024	681002-1	INSULATION WASHER	30
025	961057-5	RETAINING RING S-17	40
026	221170-4	SPIRAL BEVEL GEAR 38	2,460
027	962157-4	RETAINING RING R-40	110
028	211256-2	BALL BEARING 6203LLB	520
029	213505-3	O RING 40	80
030	253772-8	FLAT WASHER 28	100
031	443036-0	FELT RING 25	50
032	321554-7	SPINDLE	1,530
033	254038-9	WOODRUFF KEY 4	80
034	152228-7	BEARING BOX COMPLETE	970
035	911226-8	PAN HEAD SCREW M5X18	30
036	251259-4	+ PAN HEAD SCREW M5X16	80
038	342555-2	WHEEL COVER HOLDER	230
039	164258-6	WHEEL COVER 180	940
040	224029-4	INNER FLANGE 40	310
041	224521-0	LOCK NUT 16-40	300
043	953106-2	RIVET 0-5	20
044	B-80329	CARBON BRUSH SET CB-153A	
045	643650-4	BRUSH HOLDER CAP 6.5-13.5	70
047	651128-3	SWITCH C3D-15AS	1,440
048	687034-6	STRAIN RELIEF	80
049	911113-1	PAN HEAD SCREW M4X10	30
050	911133-5	PAN HEAD SCREW M4X18	50
051	911238-1	PAN HEAD SCREW M5X22	40
052	911148-2	PAN HEAD SCREW M4X25	70
053	691337-2	POWER SUPPLY CORD 1.25-3-2.5	1,240
054	682506-6	CORD GUARD 12-90	100
055	181390-1	HANDLE SET	1,040
400	152492-0	GRIP 36 COMPLETE	230
401	782412-6	LOCK NUT WRENCH 28	230
402	741413-3	DEPRESSED CENTER WHEEL 180-24	590
403	741416-7	DEPRESSED CENTER WHEEL 180-36	590

SERVICE DRAWING

MODEL NO. GA7020

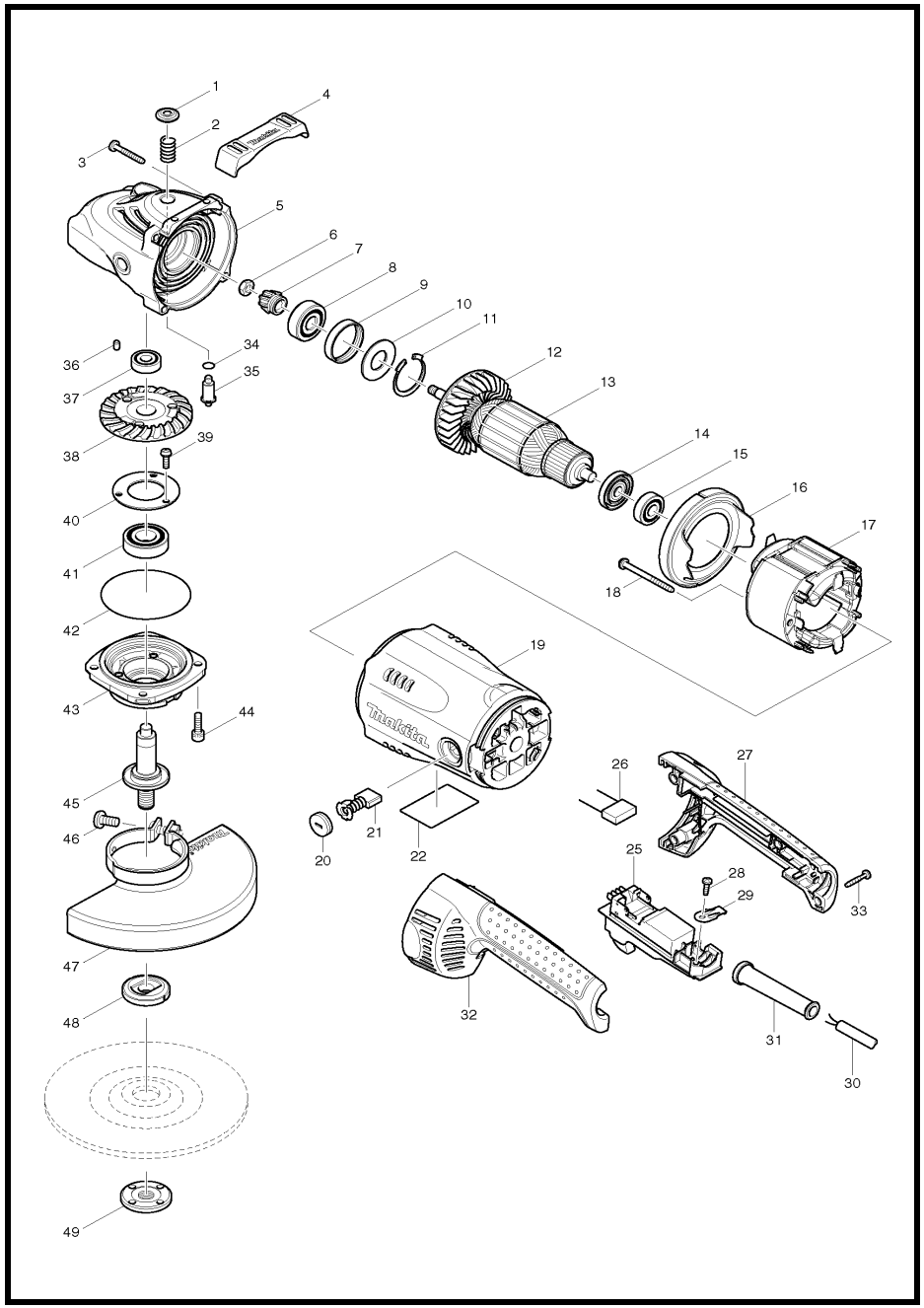

MODEL GA7020

ITEM	PARTS ID	DESCRIPTION	PRICE/BAHT
001	419133-4	PIN CAP	100
002	233292-8	COMPRESSION SPRING 12	40
003	266373-3	TAPPING SCREW 5X35	70
004	419144-9	BUMPER	90
005	154685-5	GEAR HOUSING COMPLETE	930
006	252194-9	HEX. NUT M8	110
007	227488-1	SPIRAL BEVEL GEAR 16	350
008	211132-0	BALL BEARING 6301DDW	530
009	262085-6	RUBBER RING 38	100
010	267299-2	FLAT WASHER 20	110
011	962211-4	RETAINING RING R-42	150
013	510125-7	ARMATURE ASS'Y 220V	
014	681630-2	INSULATION WASHER	150
015	211087-9	BALL BEARING 6200DDW	380
016	419135-0	BAFFLE PLATE	110
017	526178-6	FIELD ASS'Y 220V	
018	266044-2	TAPPING SCREW 5X60	130
019	154671-6	MOTOR HOUSING COMPLETE	1,070
020	643700-5	BRUSH HOLDER CAP 7-18	110
021	B-80357	CARBON BRUSH SET CB-204A	
025	650101-0	SWITCH TG08-1100-011	1,300
027	188059-8	HANDLE SET	1,210
028	266385-6	TAPPING SCREW 4X14	70
029	687678-2	STRAIN RELIEF	230
030	691216-4	POWER SUPPLY CORD 1.25-2-2.5	950
031	682560-0	CORD GUARD 10	170
032	188059-8	HANDLE SET	1,210
033	266374-1	TAPPING SCREW 4X25	30
034	213062-1	O RING 9	40
035	256491-5	SHOULDER PIN 5	110
036	263002-9	RUBBER PIN 4	30
037	211062-5	BALL BEARING 6000ZZ	360
038	227489-9	SPIRAL BEVEL GEAR 53 B	680
039	265120-9	PAN HEAD SCREW M5X16	110
040	285724-1	BEARING RETAINER 50	110
041	211278-2	BALL BEARING 6203DDW	530
042	213760-7	O RING 78	140
043	317988-0	BEARING BOX	370
044	265541-5	HEX. SOCKET HEAD BOLT M6X22	100
045	158206-5	SPINDLE COMPLETE	510
046	265158-4	+PAN HEAD SCREW M8X25	110
047	154674-0	WHEEL COVER 180 COMPLETE	440
048	224415-9	INNER FLANGE 42	200
049	224543-0	LOCK NUT 14-45	260
050	233946-7	RING SPRING 15	70
051	892272-9	CLEAR LABEL	40
A01	152539-0	GRIP 36 COMPLETE	320
A02	782407-9	LOCK NUT WRENCH 35	320

SERVICE DRAWING

MODEL NO. GA7030

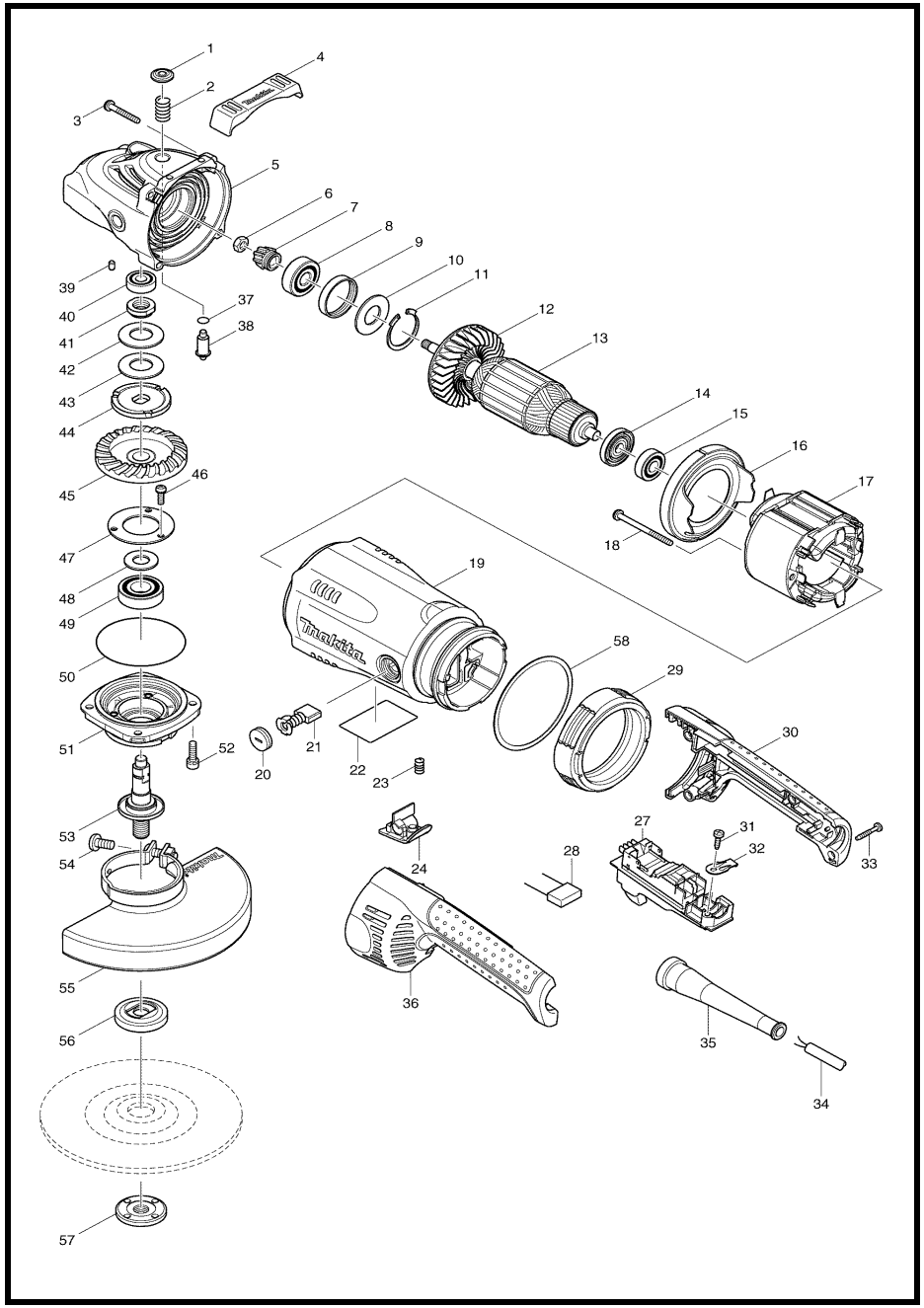

MODEL GA7030

ITEM	PARTS ID	DESCRIPTION	PRICE/BAHT
001	419133-4	PIN CAP	100
002	233292-8	COMPRESSION SPRING 12	40
003	266012-5	TAPPING SCREW 5X35	60
004	419144-9	BUMPER	90
005	154685-5	GEAR HOUSING COMPLETE	930
006	252194-9	HEX. NUT M8	110
007	227488-1	SPIRAL BEVEL GEAR 16	350
008	211132-0	BALL BEARING 6301DDW	530
009	262085-6	RUBBER RING 38	100
010	267299-2	FLAT WASHER 20	110
011	962211-4	RETAINING RING R-42	150
014	681630-2	INSULATION WASHER	150
015	211087-9	BALL BEARING 6200DDW	380
016	419135-0	BAFFLE PLATE	110
017	526193-0	FIELD ASS'Y 220-240V	
018	266029-8	TAPPING SCREW 5X65	130
019	154786-9	MOTOR HOUSING COMPLETE	2,010
020	643700-5	BRUSH HOLDER CAP 7-18	110
021	B-80357	CARBON BRUSH SET CB-204A	
023	233375-4	COMPRESSION SPRING 7	70
024	419260-7	LOCK BUTTON	90
027	650101-0	SWITCH TG08-1100-011	1,300
029	421936-4	VIBRATION PROOF RUBBER	170
030	188123-5	HANDLE SET	1,270
031	266192-7	TAPPING SCREW 4X14	50
032	687169-3	STRAIN RELIEF	60
033	265999-8	TAPPING SCREW 4X25	30
034	695107-1	POWER SUPPLY CORD 1.5-2-2.5	860
035	682560-0	CORD GUARD 10	170
036	188123-5	HANDLE SET	1,270
037	213062-1	O RING 9	40
038	256491-5	SHOULDER PIN 5	110
039	263002-9	RUBBER PIN 4	30
040	211061-7	BALL BEARING 6000LLB	390
041	252429-8	NUT M15-23	130
042	232163-6	CUP SPRING 20	180
043	232163-6	CUP SPRING 20	180
044	267798-4	LOCK WASHER	260
045	227493-8	SPIRAL BEVEL GEAR 53D	750
046	265120-9	PAN HEAD SCREW M5X16	110
047	285724-1	BEARING RETAINER 50	110
048	267167-9	FLAT WASHER 15	110
049	211278-2	BALL BEARING 6203DDW	530
050	213760-7	O RING 78	140
051	317988-0	BEARING BOX	370
052	265541-5	HEX. SOCKET HEAD BOLT M6X22	100
053	154777-0	SPINDLE COMPLETE	710
054	265158-4	+PAN HEAD SCREW M8X25	110
055	154674-0	WHEEL COVER 180 COMPLETE	440
056	224415-9	INNER FLANGE 42	200
057	224543-0	LOCK NUT 14-45	260
058	261131-2	NYLON WASHER 89	80
A01	152539-0	GRIP 36 COMPLETE	320
A02	782407-9	LOCK NUT WRENCH 35	320

SERVICE DRAWING

MODEL NO. GA7050

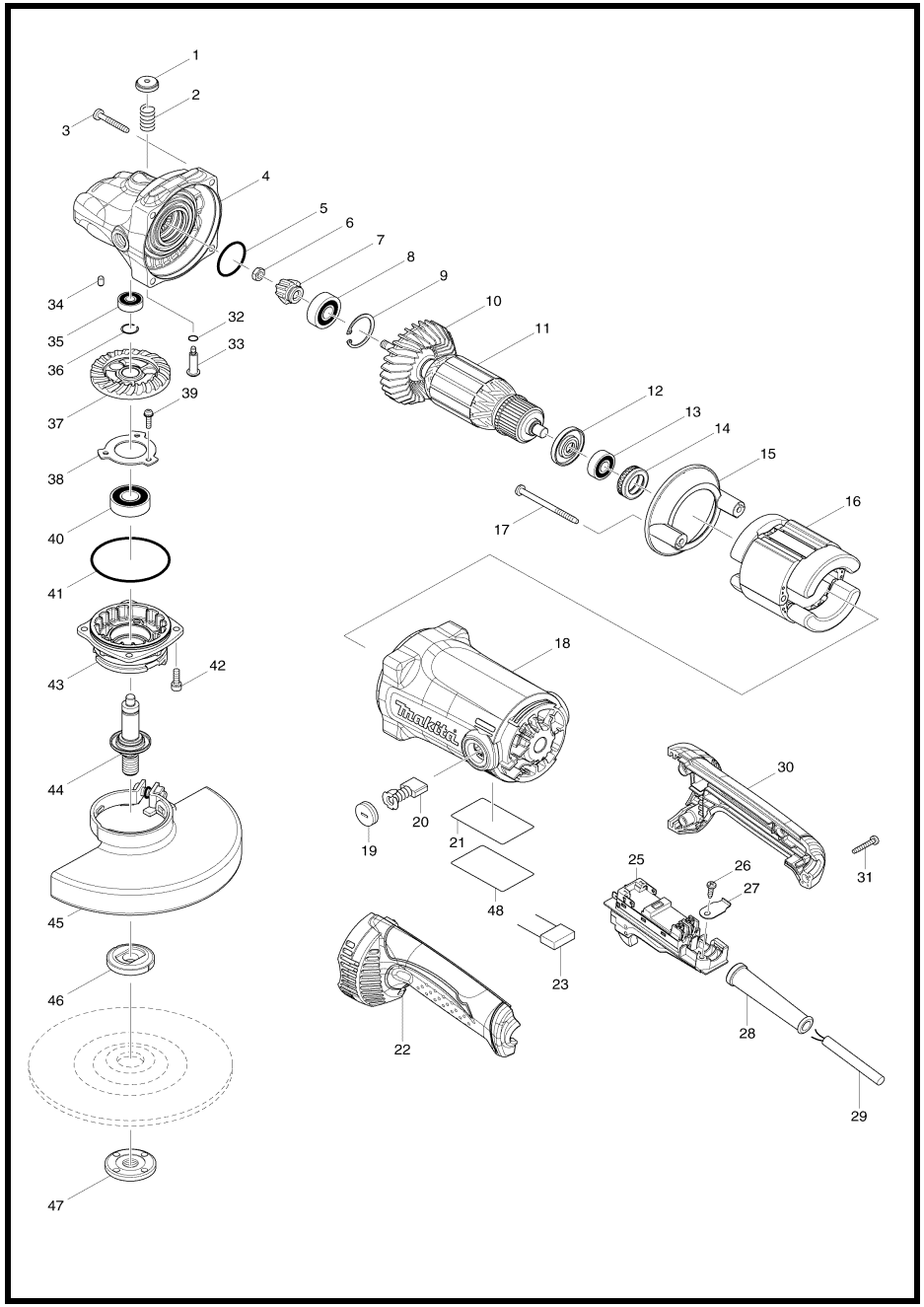

MODEL GA7050

ITEM	PARTS ID	DESCRIPTION	PRICE/BAHT
001	451485-7	PIN CAP	50
002	233292-8	COMPRESSION SPRING 12	40
003	266373-3	TAPPING SCREW 5X35	70
004	140223-9	GEAR HOUSING COMPLETE	860
005	213487-9	O RING 31	50
006	264010-3	HEX.NUT M7	70
007	227564-1	SPIRAL BEVEL GEAR 10A	380
008	211137-0	BALL BEARING 6201LLU	380
009	257965-9	RETAINING RING (INT) R-32	250
010	240120-0	FAN 80	330
011	517853-5	ARMATURE ASSEMBLY 220V	
012	681657-2	INSULATION WASHER	120
013	210059-1	BALL BEARING 6000DDW	300
014	421490-8	RUBBER RING 26	360
015	451480-7	BAFFLE PLATE	130
016	523413-3	FIELD ASSEMBLY 220V	
017	266038-7	TAPPING SCREW 5X70	170
018	140222-1	MOTOR HOUSING COMPLETE	900
019	643700-5	BRUSH HOLDER CAP 7-18	110
020	B-80357	CARBON BRUSH SET CB-204A	
022	188848-1	HANDLE SET	610
025	650101-0	SWITCH TG08-1100-011	1,300
026	266385-6	TAPPING SCREW 4X14	70
027	687169-3	STRAIN RELIEF	60
028	682574-9	CORD GUARD 10-90	90
029	691015-4	POWER SUPPLY CORD 0.75-2-2.5	740
030	188848-1	HANDLE SET	610
031	266374-1	TAPPING SCREW 4X25	30
032	213026-5	O RING 7	30
033	256516-5	SHOULDER PIN 11	110
034	263002-9	RUBBER PIN 4	30
035	210029-0	BALL BEARING 608ZZ	130
036	233925-5	RING SPRING 13	70
037	227562-5	SPIRAL BEVEL GEAR 38	840
038	285851-4	BEARING RETAINER	50
039	911128-8	PAN HEAD SCREW M4X16	30
040	211241-5	BALL BEARING 6202DDW	180
041	213720-9	O RING 67	90
042	922221-3	HEX. SOCKET HEAD BOLT M5X16	60
043	318523-7	BEARING BOX	450
044	140224-7	SPINDLE COMPLETE A	380
045	122889-7	WHEEL COVER 180K ASSEMBLY	710
046	224415-9	INNER FLANGE 42	200
047	224543-0	LOCK NUT 14-45	260
A01	152539-0	GRIP 36 COMPLETE	320
A02	782407-9	LOCK NUT WRENCH 35	320

SERVICE DRAWING

MODEL NO. GA7060

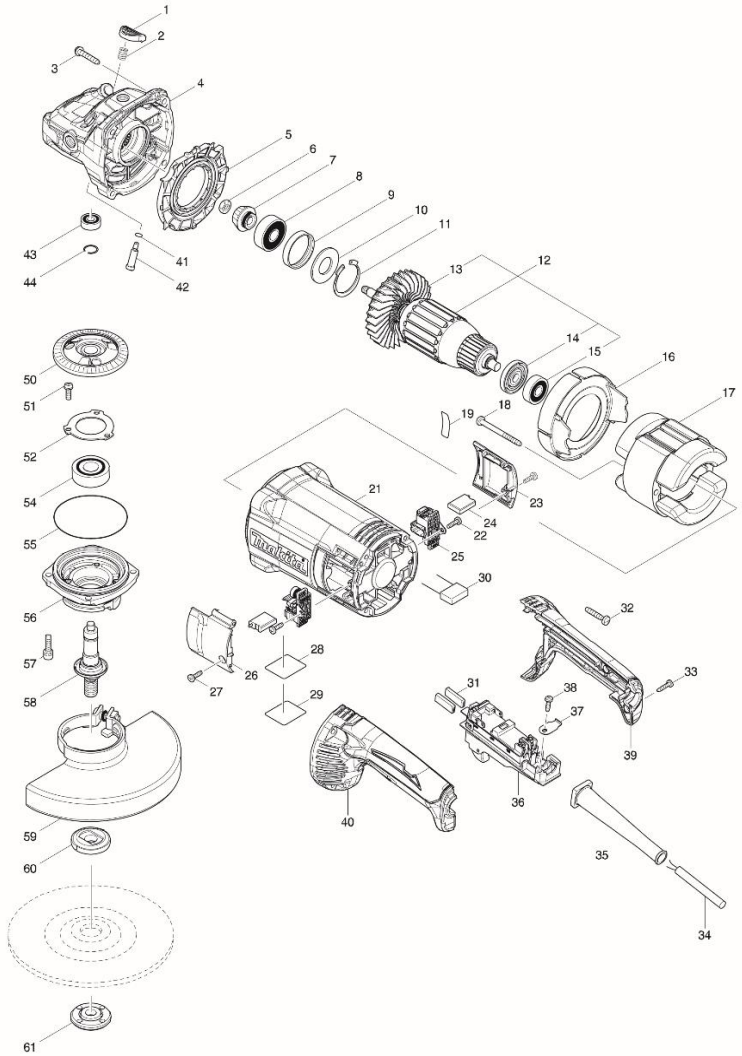

MODEL GA7060

ITEM	PARTS ID	DESCRIPTION	PRICE/BAHT
001	456247-8	PIN CAP	70
002	234391-9	COMPRESSION SPRING 8	20
003	251489-7	TAPPING SCREW 5X30	50
004	143485-8	GEAR HOUSING COMPLETE	1,510
005	456238-9	DIFFUSER	170
006	252194-9	HEX. NUT M8	110
007	227655-8	SPIRAL BEVEL GEAR 17	380
008	211132-0	BALL BEARING 6301DDW	530
009	262085-6	RUBBER RING 38	100
010	267299-2	FLAT WASHER 20	110
011	962211-4	RETAINING RING R-42	150
012	513448-2	ARMATURE ASS'Y 220V	
013	240161-6	FAN 68	
014	681630-2	INSULATION WASHER	150
015	211087-9	BALL BEARING 6200DDW	380
016	456239-7	BAFFLE PLATE	90
017	621778-8	FIELD ASS'Y 220-240V	
018	266044-2	TAPPING SCREW 5X60	
021	456240-2	MOTOR HOUSING	1,420
022	266385-6	TAPPING SCREW 4X14	
023	143950-7	BRUSH HOLDER COVER R COMPLETE	330
024	197128-4	CARBON BRUSH CB-218	
025	643714-4	BRUSH HOLDER	150
026	143949-2	BRUSH HOLDER COVER L COMPLETE	280
027	266385-6	TAPPING SCREW 4X14	
031	686036-9	RECEPTACLE SLEEVE	50
032	251489-7	TAPPING SCREW 5X30	50
033	266326-2	TAPPING SCREW 4X18	
034	691216-4	POWER SUPPLY CORD 1.25-2-2.5	
035	682573-1	CORD GUARD 10	
036	632F74-5	SWITCH UNIT	910
037	687678-2	STRAIN RELIEF	
038	266385-6	TAPPING SCREW 4X14	
039	183C63-0	HANDLE SET	640
040	183C63-0	HANDLE SET	640
041	213026-5	O RING 7	
042	256571-7	SHOULDER PIN 7	100
043	211032-4	BALL BEARING 608ZZ	
044	233925-5	RING SPRING 13	
050	227656-6	SPIRAL BEVEL GEAR 55	820
051	265120-9	PAN HEAD SCREW M5X16	110
052	285741-1	BEARING RETAINER 50	110
054	211278-2	BALL BEARING 6203DDW	530
055	213760-7	O RING 78	140
056	319351-3	BEARING BOX	570
057	265541-5	HEX. SOCKET HEAD BOLT M6X22	100
058	143484-0	SPINDLE COMPLETE	430
059	122889-7	WHEEL COVER 180 COMPLETE	
060	224415-9	INNER FLANGE 42	200
061	224485-8	LOCK NUT 14-45	220
A01	143486-6	GRIP 37 COMPLETE	
A02	782407-9	LOCK NUT WRENCH 35	320

SERVICE DRAWING

MODEL NO. GA9020

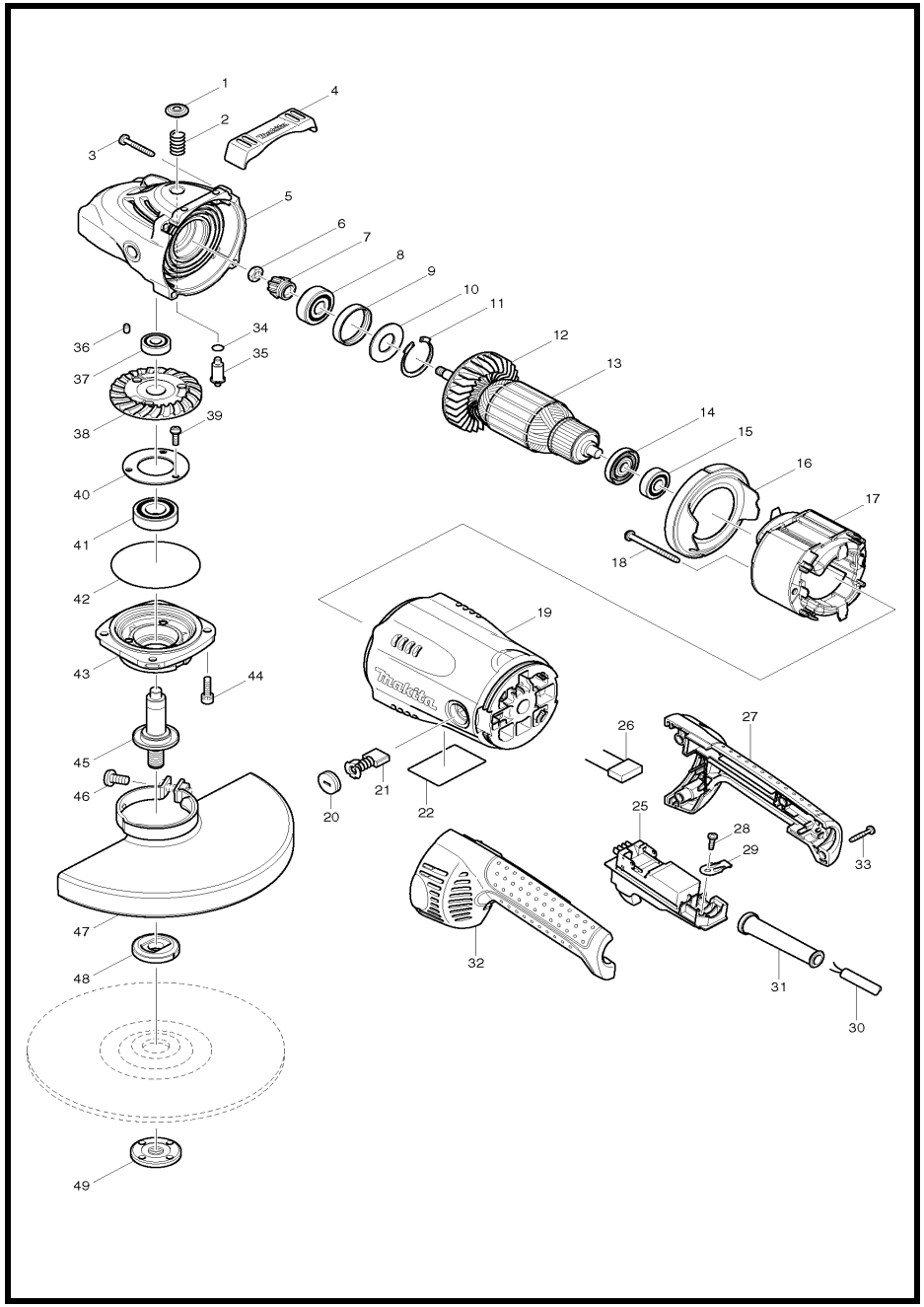

MODEL GA9020

ITEM	PARTS ID	DESCRIPTION	PRICE/BAHT
001	419133-4	PIN CAP	100
002	233292-8	COMPRESSION SPRING 12	40
003	266373-3	TAPPING SCREW 5X35	70
004	419144-9	BUMPER	90
005	154685-5	GEAR HOUSING COMPLETE	930
006	252194-9	HEX. NUT M8	110
007	227490-4	SPIRAL BEVEL GEAR 12	350
008	211132-0	BALL BEARING 6301DDW	530
009	262085-6	RUBBER RING 38	100
010	267299-2	FLAT WASHER 20	110
011	962211-4	RETAINING RING R-42	150
013	510125-7	ARMATURE ASS'Y 220V	
014	681630-2	INSULATION WASHER	150
015	211087-9	BALL BEARING 6200DDW	380
016	419135-0	BAFFLE PLATE	110
017	526178-6	FIELD ASS'Y 220V	
018	266044-2	TAPPING SCREW 5X60	130
019	154671-6	MOTOR HOUSING COMPLETE	1,070
020	643700-5	BRUSH HOLDER CAP 7-18	110
021	B-80357	CARBON BRUSH SET CB-204A	
025	650101-0	SWITCH TG08-1100-011	1,300
027	188059-8	HANDLE SET	1,210
028	266385-6	TAPPING SCREW 4X14	70
029	687678-2	STRAIN RELIEF	230
030	691216-4	POWER SUPPLY CORD 1.25-2-2.5	950
031	682560-0	CORD GUARD 10	170
032	188059-8	HANDLE SET	1,210
033	266374-1	TAPPING SCREW 4X25	30
034	213062-1	O RING 9	40
035	256491-5	SHOULDER PIN 5	110
036	263002-9	RUBBER PIN 4	30
037	211062-5	BALL BEARING 6000ZZ	360
038	227491-2	SPIRAL BEVEL GEAR 53 A	700
039	265120-9	PAN HEAD SCREW M5X16	110
040	285724-1	BEARING RETAINER 50	110
041	211278-2	BALL BEARING 6203DDW	530
042	213760-7	O RING 78	140
043	317988-0	BEARING BOX	370
044	265541-5	HEX. SOCKET HEAD BOLT M6X22	100
045	158206-5	SPINDLE COMPLETE	510
046	265158-4	+PAN HEAD SCREW M8X25	110
047	154672-4	WHEEL COVER 230 COMPLETE	580
048	224415-9	INNER FLANGE 42	200
049	224543-0	LOCK NUT 14-45	260
050	233946-7	RING SPRING 15	70
051	892272-9	CLEAR LABEL	40
A01	152539-0	GRIP 36 COMPLETE	320
A02	782407-9	LOCK NUT WRENCH 35	320

SERVICE DRAWING

MODEL NO. GA9030

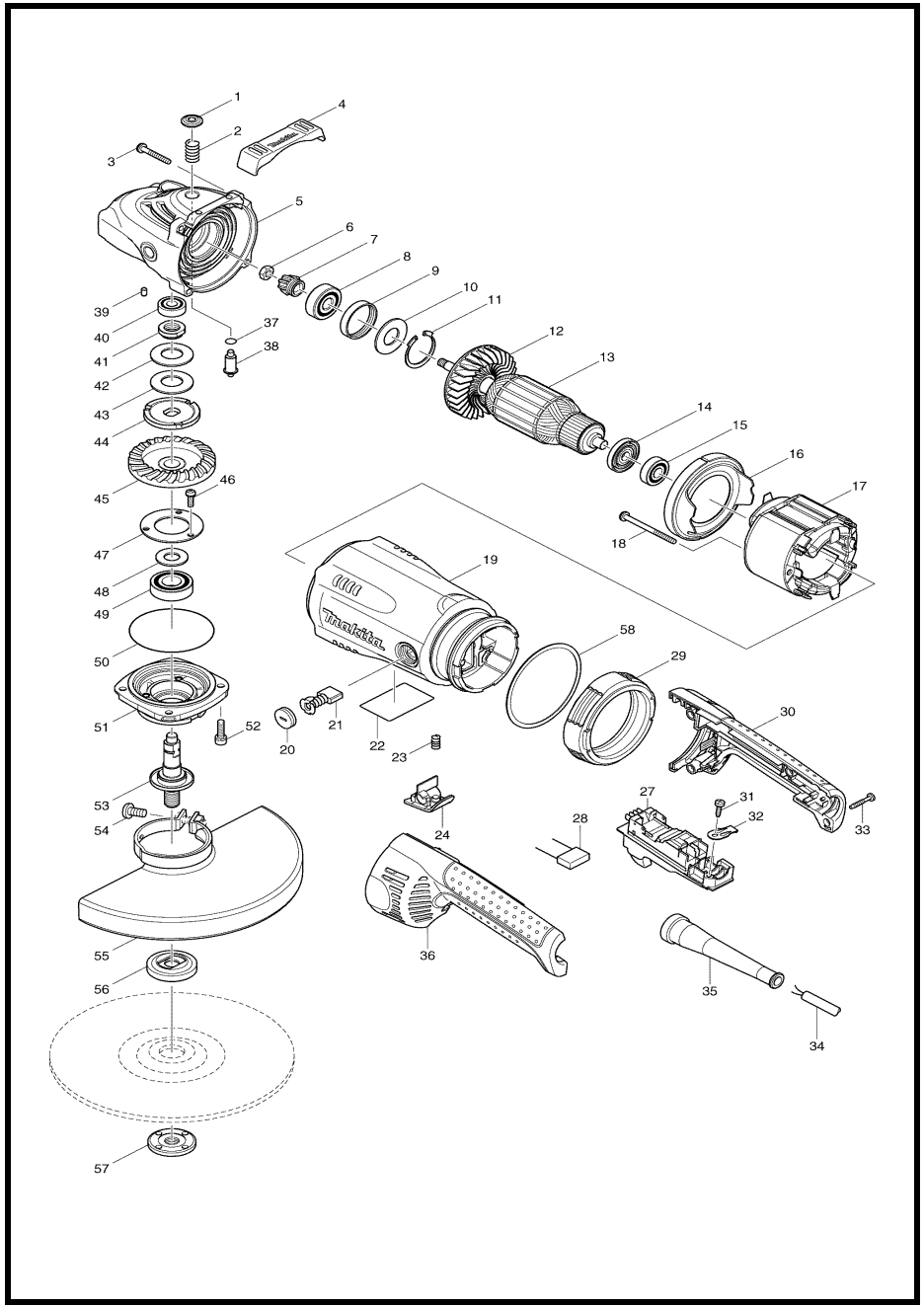

MODEL GA9030

ITEM	PARTS ID	DESCRIPTION	PRICE/BAHT
001	419133-4	PIN CAP	100
002	233292-8	COMPRESSION SPRING 12	40
003	266012-5	TAPPING SCREW 5X35	60
004	419144-9	BUMPER	90
005	154685-5	GEAR HOUSING COMPLETE	930
006	252194-9	HEX. NUT M8	110
007	227490-4	SPIRAL BEVEL GEAR 12	350
008	211132-0	BALL BEARING 6301DDW	530
009	262085-6	RUBBER RING 38	100
010	267299-2	FLAT WASHER 20	110
011	962211-4	RETAINING RING R-42	150
013	517828-4	ARMATURE ASS'Y 220V	
014	681630-2	INSULATION WASHER	150
015	211087-9	BALL BEARING 6200DDW	380
016	419135-0	BAFFLE PLATE	110
017	526193-0	FIELD ASS'Y 220-240V	
018	266029-8	TAPPING SCREW 5X65	130
019	154786-9	MOTOR HOUSING COMPLETE	2,010
020	643700-5	BRUSH HOLDER CAP 7-18	110
021	B-80357	CARBON BRUSH SET CB-204A	
022	862125-6	GA9030 NAME PLATE	
023	233375-4	COMPRESSION SPRING 7	70
024	419260-7	LOCK BUTTON	90
027	650101-0	SWITCH TG08-1100-011	1,300
029	421936-4	VIBRATION PROOF RUBBER	170
030	188123-5	HANDLE SET	1,270
031	266192-7	TAPPING SCREW 4X14	50
032	687169-3	STRAIN RELIEF	60
033	265999-8	TAPPING SCREW 4X25	30
034	695107-1	POWER SUPPLY CORD 1.5-2-2.5	860
035	682560-0	CORD GUARD 10	170
036	188123-5	HANDLE SET	1,270
037	213062-1	O RING 9	40
038	256491-5	SHOULDER PIN 5	110
039	263002-9	RUBBER PIN 4	30
040	211061-7	BALL BEARING 6000LLB	390
041	252429-8	NUT M15-23	130
042	232163-6	CUP SPRING 20	180
043	232163-6	CUP SPRING 20	180
044	267798-4	LOCK WASHER	260
045	227492-0	SPIRAL BEVEL GEAR 53C	790
046	265120-9	PAN HEAD SCREW M5X16	110
047	285724-1	BEARING RETAINER 50	110
048	267167-9	FLAT WASHER 15	110
049	211278-2	BALL BEARING 6203DDW	530
050	213760-7	O RING 78	140
051	317988-0	BEARING BOX	370
052	265541-5	HEX. SOCKET HEAD BOLT M6X22	100
053	154777-0	SPINDLE COMPLETE	710
054	265158-4	+PAN HEAD SCREW M8X25	110
055	154672-4	WHEEL COVER 230 COMPLETE	580
056	224415-9	INNER FLANGE 42	200
057	224543-0	LOCK NUT 14-45	260
058	261131-2	NYLON WASHER 89	80
059	819357-6	CLEAR LABEL	40
A01	152539-0	GRIP 36 COMPLETE	320
A02	782407-9	LOCK NUT WRENCH 35	320

SERVICE DRAWING

MODEL NO. GA9050

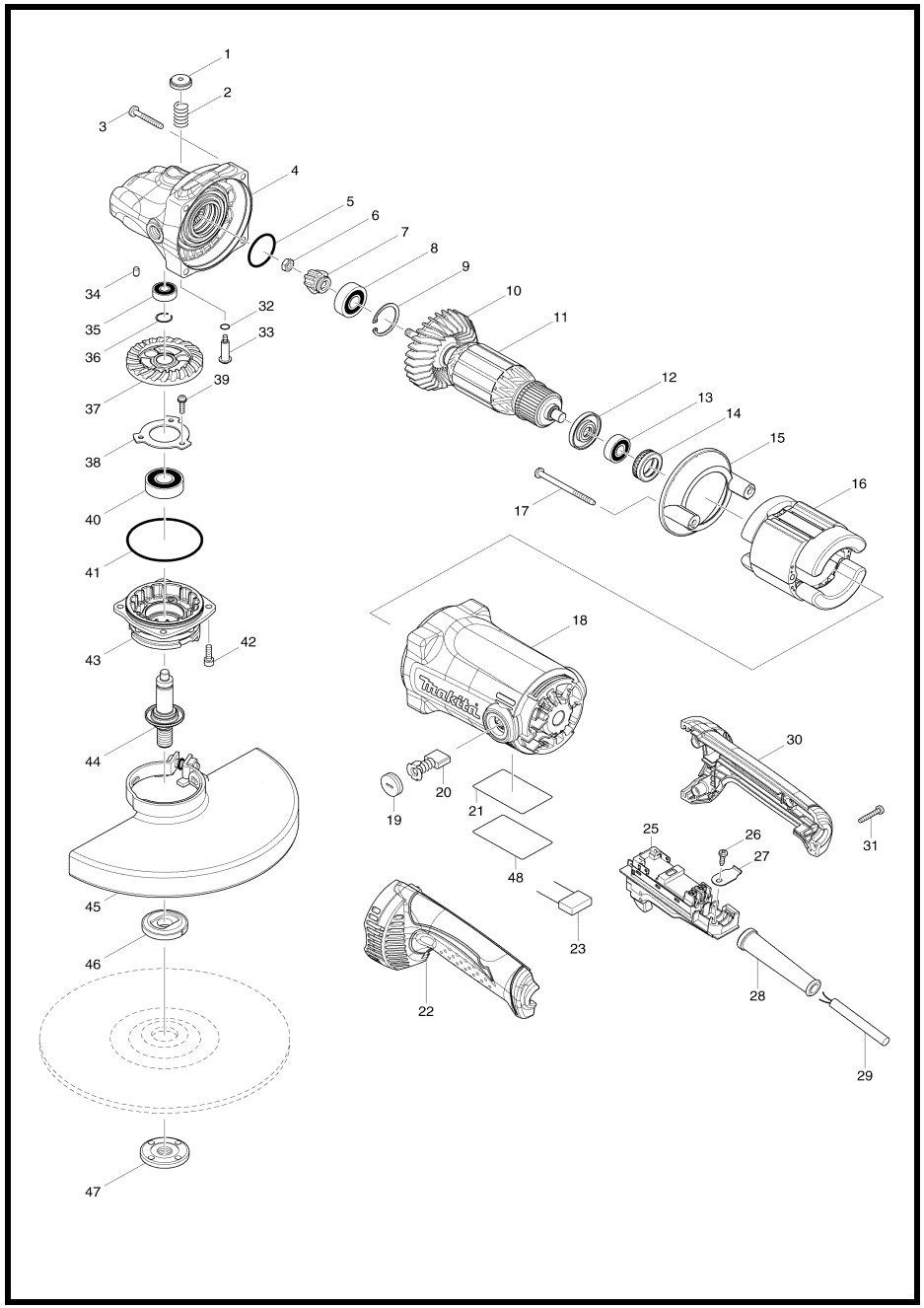

MODEL GA9050

ITEM	PARTS ID	DESCRIPTION	PRICE/BAHT
001	451485-7	PIN CAP	50
002	233292-8	COMPRESSION SPRING 12	40
003	266373-3	TAPPING SCREW 5X35	70
004	140223-9	GEAR HOUSING COMPLETE	860
005	213487-9	O RING 31	50
006	264010-3	HEX.NUT M7	70
007	227563-3	SPIRAL BEVEL GEAR 10B	360
008	211137-0	BALL BEARING 6201LLU	380
009	257965-9	RETAINING RING (INT) R-32	250
011	517853-5	ARMATURE ASSEMBLY 220V	
012	681657-2	INSULATION WASHER	120
013	210059-1	BALL BEARING 6000DDW	300
014	421490-8	RUBBER RING 26	360
015	451480-7	BAFFLE PLATE	130
016	523413-3	FIELD ASSEMBLY 220V	
017	266038-7	TAPPING SCREW 5X70	170
018	140222-1	MOTOR HOUSING COMPLETE	900
019	643700-5	BRUSH HOLDER CAP 7-18	110
020	B-80357	CARBON BRUSH SET CB-204A	
021	867561-1	GA9050 NAME PLATE	
022	188848-1	HANDLE SET	610
025	650101-0	SWITCH TG08-1100-011	1,300
026	266385-6	TAPPING SCREW 4X14	70
027	687169-3	STRAIN RELIEF	60
028	682574-9	CORD GUARD 10-90	90
029	691015-4	POWER SUPPLY CORD 0.75-2-2.5	740
030	188848-1	HANDLE SET	610
031	266374-1	TAPPING SCREW 4X25	30
032	213026-5	O RING 7	30
033	256516-5	SHOULDER PIN 11	110
034	263002-9	RUBBER PIN 4	30
035	210029-0	BALL BEARING 608ZZ	130
036	233925-5	RING SPRING 13	70
037	227561-7	SPIRAL BEVEL GEAR 49	760
038	285851-4	BEARING RETAINER	50
039	911128-8	PAN HEAD SCREW M4X16	30
040	211241-5	BALL BEARING 6202DDW	180
041	213720-9	O RING 67	90
042	922221-3	HEX. SOCKET HEAD BOLT M5X16	60
043	318523-7	BEARING BOX	450
044	140224-7	SPINDLE COMPLETE A	380
045	122891-0	WHEEL COVER 230K ASSEMBLY	760
046	224415-9	INNER FLANGE 42	200
047	224543-0	LOCK NUT 14-45	260
A01	152539-0	GRIP 36 COMPLETE	320
A02	782407-9	LOCK NUT WRENCH 35	320

SERVICE DRAWING

MODEL NO. GA9060

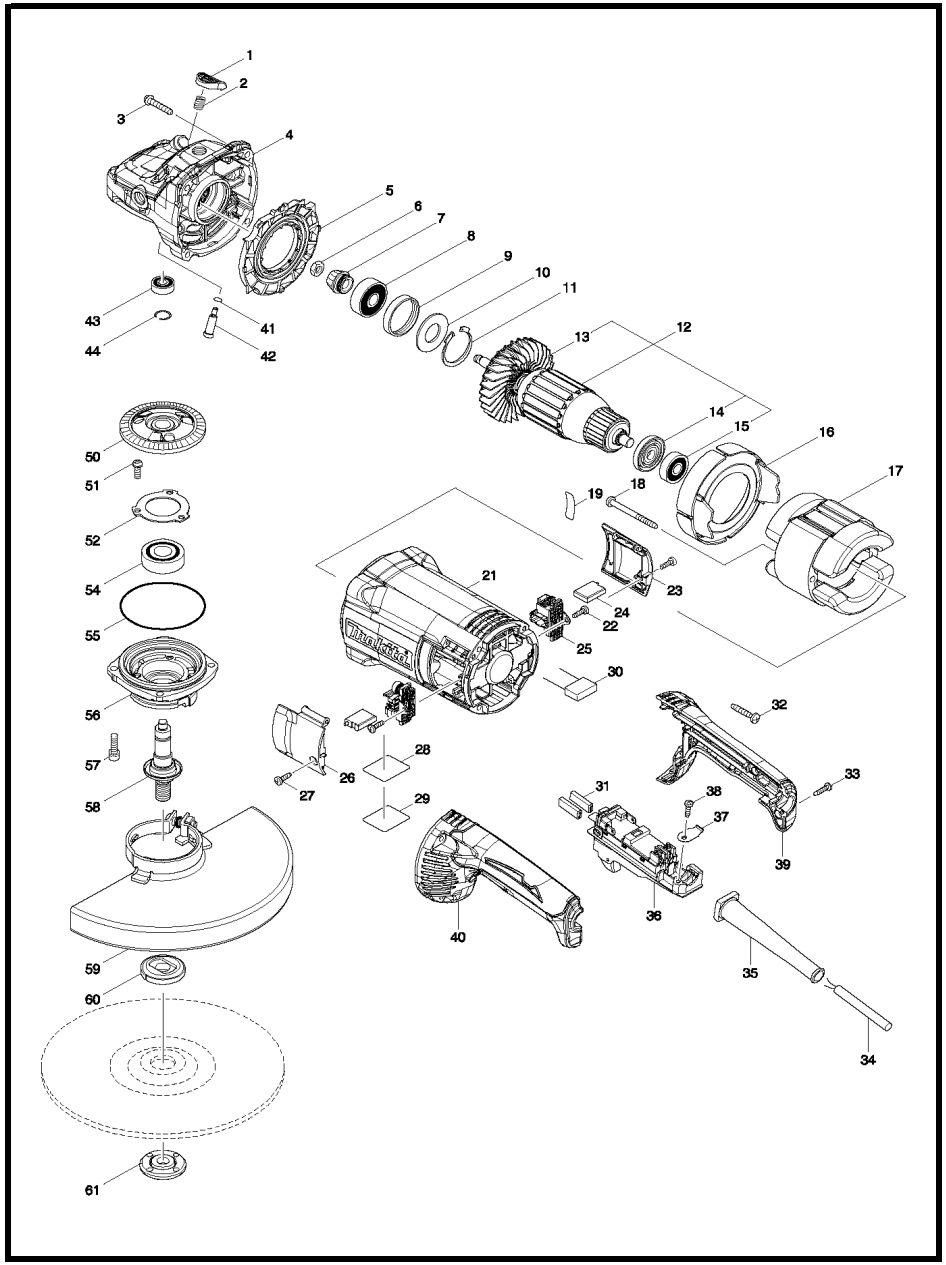

MODEL GA9060

ITEM	PARTS ID	DESCRIPTION	PRICE/BAHT
001	456247-8	PIN CAP	70
002	234391-9	COMPRESSION SPRING 8	20
003	251489-7	TAPPING SCREW 5X30	50
004	143485-8	GEAR HOUSING COMPLETE	1,510
005	456238-9	DIFFUSER	170
006	252194-9	HEX. NUT M8	110
007	227652-4	SPIRAL BEVEL GEAR 13	370
008	211132-0	BALL BEARING 6301DDW	530
009	262085-6	RUBBER RING 38	100
010	267299-2	FLAT WASHER 20	110
011	962211-4	RETAINING RING R-42	150
012	513448-2	ARMATURE ASS'Y 220V	
013	240161-6	ARMATURE ASS'Y 220V	
014	681630-2	INSULATION WASHER	150
015	211087-9	BALL BEARING 6200DDW	380
016	456239-7	BAFFLE PLATE	90
017	621778-8	FIELD 220V	
018	266044-2	TAPPING SCREW 5X60	
021	456240-2	MOTOR HOUSING	1,420
022	266385-6	TAPPING SCREW 4X4	
023	143950-7	BRUSH HOLDER COVER R COMPLETE	330
024	197128-4	CARBON BRUSH CB-218	
025	643714-4	BRUSH HOLDER COVER	150
026	143949-2	BRUSH HOLDER COVER R COMPLETE	280
027	266385-6	TAPPING SCREW 4X14	
031	686036-9	RECEPTACLE SLEEVE	50
032	251489-7	TAPPING SCREW 5X30	50
033	266326-2	TAPPING SCREW 4X18	
034	691216-4	POWER SUPPLY CORD 1.25-2-2.5	
035	682573-1	CORD GUARD 10	
036	632F74-5	SWITCH UNIT	910
037	687678-2	STRAIN RELIEF	
038	266385-6	TAPPING SCREW 4X14	
039	183C63-0	HANDLE SET	640
040	183C63-0	HANDLE SET	640
041	213026-5	O RING 7	
042	256571-7	SHOULDER PIN 7	100
043	211032-4	BALL BEARING 608ZZ	
044	233925-5	RING SPRING 13	
050	227653-2	SPIRAL BEVEL GEAR 54	820
051	265120-9	PAN HEAD SCREW M5X16	110
052	285724-1	BEARING RETAINER 50	110
054	211278-2	BALL BEARING 6203DDW	530
055	213760-7	O RING 78	140
056	319351-3	BEARING BOX	570
057	265541-5	HEX. SOCKET HEAD BOLT M6X22	100
058	143484-0	SPINDLE COMPLETE	430
059	122891-0	WHEEL COVER 230K ASSEMBLY	760
060	224415-9	INNER FLANGE 42	200
061	224485-8	LOCK NUT 14-45	220

ITEM	PARTS ID	DESCRIPTION	PRICE/BAHT
A01	143486-6	GRIP 37 COMPLETE	
A02	782407-9	LOCK NUT WRENCH 35	320

SERVICE DRAWING

MODEL NO. GC5000

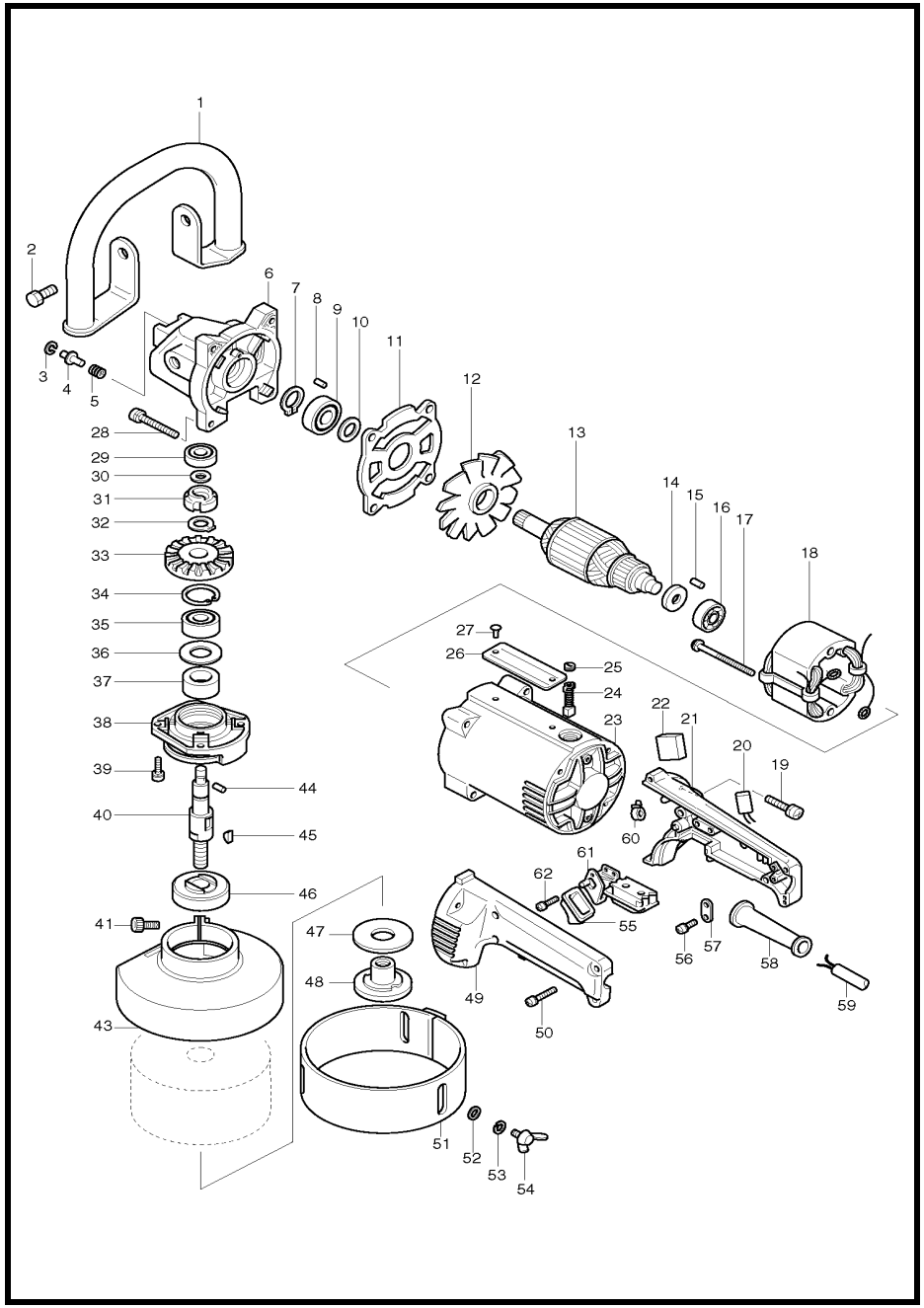

MODEL GC5000

ITEM	PARTS ID	DESCRIPTION	PRICE/BAHT
001	164706-5	GRIP	1,120
002	921621-4	HEX. BOLT M12X16	170
003	962062-5	RETAINING RING R-12	50
004	256615-3	PIN 6	90
005	231037-8	COMPRESSION SPRING 7	20
006	157275-3	GEAR HOUSING	2,840
007	961055-9	RETAINING RING S-15	50
008	263005-3	RUBBER PIN 6	30
009	211206-7	BALL BEARING 6202LLB	460
010	253781-7	FLAT WASHER 15	100
011	341442-2	PLATE	390
013	513373-7	ARMATURE ASS'Y 220V	
014	681635-2	INSULATION WASHER	80
015	263002-9	RUBBER PIN 4	30
016	211068-3	BALL BEARING 6200LB	370
017	911285-2	PAN HEAD SCREW M5X60	80
018	523333-1	FIELD ASS'Y 220V	
019	911248-8	PAN HEAD SCREW M5X28	50
021	181022-0	HANDLE SET	1,260
022	685720-3	SPONGE SHEET	40
023	156472-8	MOTOR HOUSING	2,600
024	B-80329	CARBON BRUSH SET CB-153A	
025	643650-4	BRUSH HOLDER CAP 6.5-13.5	70
026	855257-6	NAME PLATE GC5000	
027	953106-2	RIVET 0-5	20
028	911261-6	PAN HEAD SCREW M5X40	50
029	211058-6	BALL BEARING 629LB	320
030	253214-2	FLAT WASHER 9	80
031	322465-9	SPINDLE LOCK BUSH	390
032	961055-9	RETAINING RING S-15	50
033	221324-3	SPIRAL BEVEL GEAR 47	3,230
034	962153-2	RETAINING RING R-35	80
035	211206-7	BALL BEARING 6202LLB	460
036	253782-5	FLAT WASHER 20	100
037	443058-0	FELT RING 20	80
038	315631-5	BEARING BOX	2,770
039	911226-8	PAN HEAD SCREW M5X18	30
040	321641-2	SPINDLE	2,280
041	922431-2	HEX. SOCKET HEAD BOLT M8X20	260
043	134335-8	WHEEL COVER ASS'Y	2,160
044	256047-4	PIN 6	80
045	254001-2	WOODRUFF KEY 4	80
046	224207-6	INNER FLANGE 51	830
047	261061-7	FIBER WASHER 22.5	80
048	224527-8	LOCK NUT 16-50-22	660
049	181022-0	HANDLE SET	1,260
050	911143-2	PAN HEAD SCREW M4X22	110
051	342671-0	SKIRT	780
052	941101-4	FLAT WASHER 5	20
053	942101-7	SPRING WASHER 5	100
054	924206-5	WING BOLT M5X10	110
055	421279-4	DUST COVER F/AC/DC SWITCH	170
056	911133-5	PAN HEAD SCREW M4X18	50
057	687000-3	STRAIN RELIEF	40
058	682505-8	CORD GUARD 10-90	150
059	691216-4	POWER SUPPLY CORD 1.25-2-2.5	950
060	687010-0	BAND	30
061	651122-5	SWITCH 8638K3	1,080
062	911113-1	PAN HEAD SCREW M4X10	30
400	782414-2	LOCK NUT WRENCH 34	690
401	783204-6	HEX. WRENCH 6	110
402	224528-6	LOCK NUT 16-50-19	820
403	794330-6	STRAIGHT CUP WHEEL 125-46/60	3,470

SERVICE DRAWING

MODEL NO. GD0600

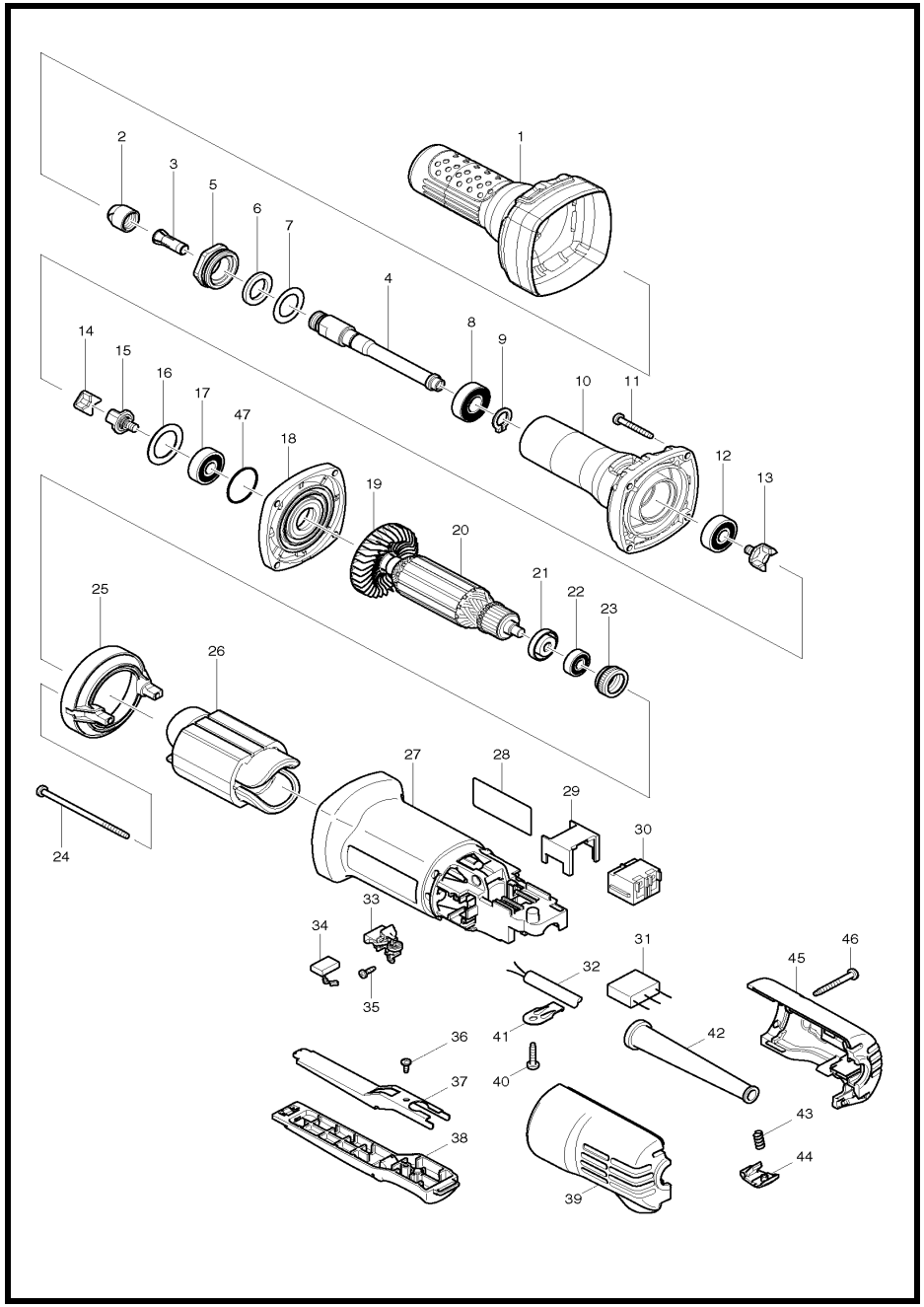

MODEL GD0600

ITEM	PARTS ID	DESCRIPTION	PRICE/BAHT
001	421943-7	INSULATION COVER	270
002	763664-8	COLLET NUT 6	180
003	763620-8	COLLET CONE 6MM	760
004	324638-0	SPINDLE	460
005	317999-5	BEARING RETAINER	170
006	443124-3	FELT RING 17	230
007	267329-9	FLAT WASHER 18	170
008	211101-1	BALL BEARING 6001LLB	450
009	961052-5	RETAINING RING S-12	40
010	318000-9	BARREL	650
011	266361-0	TAPPING SCREW 4X30	70
012	210042-8	BALL BEARING 629LLB	250
013	324639-8	COUPLING	290
014	421942-9	SPACER	150
015	324639-8	COUPLING	290
016	267126-3	FLAT WASHER 22	120
017	210042-8	BALL BEARING 629LLB	250
018	317821-6	GEAR HOUSING COVER	320
020	510175-2	ARMATURE ASS'Y 220V	
021	681636-0	INSULATION WASHER	60
022	211021-9	BALL BEARING 607LLB	240
023	421868-5	LABYRINTH RUBBER RING 19	100
024	266345-8	TAPPING SCREW 4X80	70
025	418770-1	BAFFLE PLATE	120
026	621723-3	FIELD 220-240V	
027	418838-3	MOTOR HOUSING	510
029	418729-8	SPACER	110
030	651947-7	SWITCH 1247.0302	200
032	691015-4	POWER SUPPLY CORD 0.75-2-2.5	740
033	643760-7	BRUSH HOLDER	260
034	195001-2	CARBON BRUSH SET CB-325	
035	266007-8	TAPPING SCREW BIND PT 3X10	30
036	266492-5	TAPPING SCREW 3X8	50
037	345504-8	PLATE	110
038	154584-1	SWITCH LEVER B COMPLETE	180
039	183943-2	REAR COVER SET	290
040	266326-2	TAPPING SCREW 4X18	30
041	687169-3	STRAIN RELIEF	60
042	682566-8	CORD GUARD 10	80
043	231252-4	COMPRESSION SPRING 6	40
044	418842-2	LOCK ON BUTTON	90
045	183943-2	REAR COVER SET	290
046	266351-3	TAPPING SCREW 4X35	30
047	213445-5	O-RING 26	30
A01	781039-9	WRENCH 13	150

SERVICE DRAWING

MODEL NO. GD0601

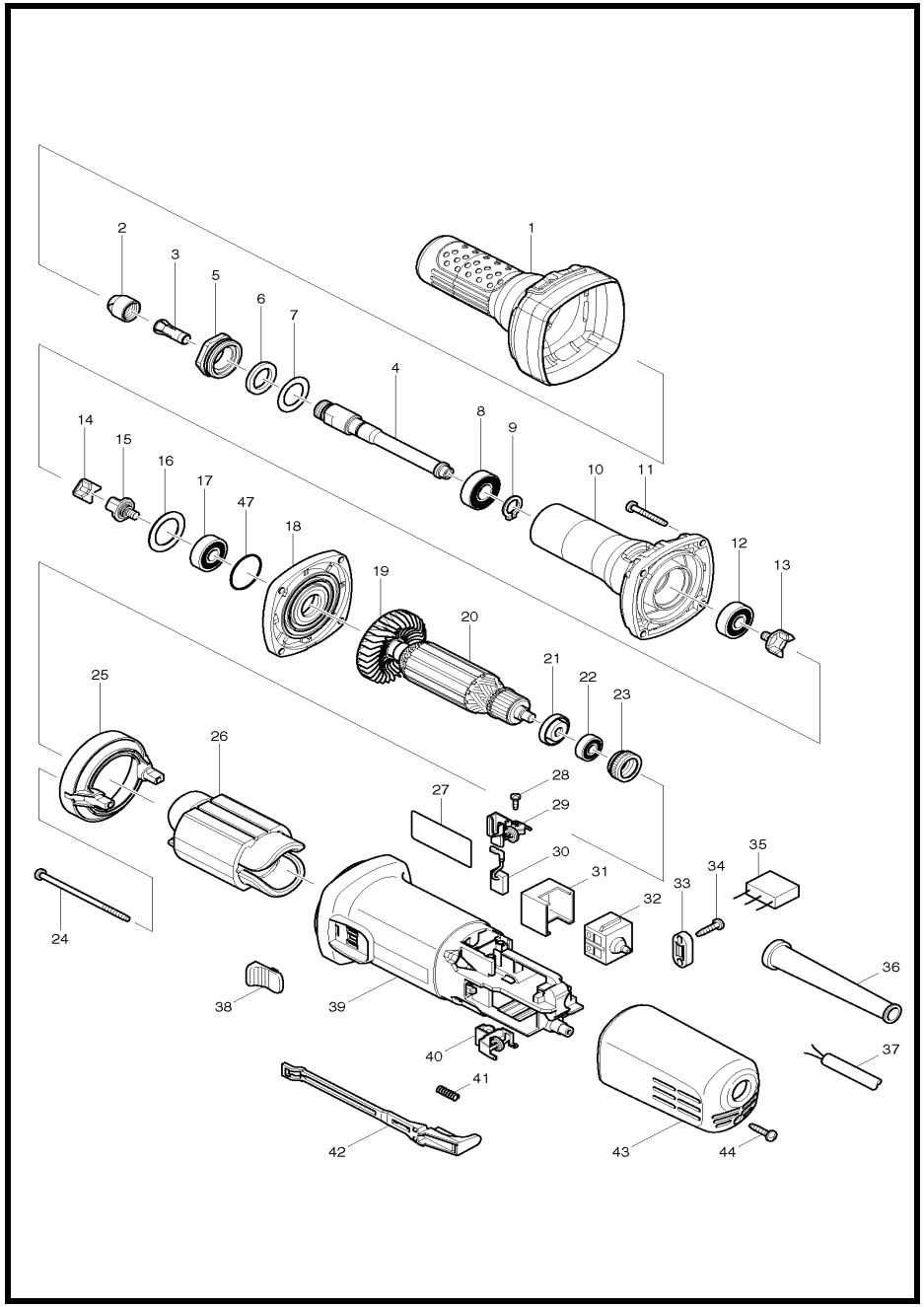

MODEL GD0601

ITEM	PARTS ID	DESCRIPTION	PRICE/BAHT
001	421943-7	INSULATION COVER	270
002	763664-8	COLLET NUT 6	180
003	763620-8	COLLET CONE 6MM	760
004	324638-0	SPINDLE	460
005	317999-5	BEARING RETAINER	170
006	443124-3	FELT RING 17	230
007	267329-9	FLAT WASHER 18	170
008	211101-1	BALL BEARING 6001LLB	450
009	961052-5	RETAINING RING S-12	40
010	318000-9	BARREL	650
011	266361-0	TAPPING SCREW 4X30	70
012	210042-8	BALL BEARING 629LLB	250
013	324639-8	COUPLING	290
014	421942-9	SPACER	150
015	324639-8	COUPLING	290
016	267126-3	FLAT WASHER 22	120
017	210042-8	BALL BEARING 629LLB	250
018	317821-6	GEAR HOUSING COVER	320
020	510175-2	ARMATURE ASS'Y 220V	
021	681636-0	INSULATION WASHER	60
022	211021-9	BALL BEARING 607LLB	240
023	421868-5	LABYRINTH RUBBER RING 19	100
024	266345-8	TAPPING SCREW 4X80	70
025	418770-1	BAFFLE PLATE	120
026	621723-3	FIELD 220-240V	
027	863144-5	GD0601 NAME PLATE	
028	266007-8	TAPPING SCREW BIND PT 3X10	30
029	643760-7	BRUSH HOLDER	260
030	195001-2	CARBON BRUSH SET CB-325	
031	418729-8	SPACER	110
032	651947-7	SWITCH 1247.0302	200
033	687140-7	STRAIN RELIEF	40
034	266326-2	TAPPING SCREW 4X18	30
036	682566-8	CORD GUARD 10	80
037	691015-4	POWER SUPPLY CORD 0.75-2-2.5	740
038	419566-3	SWITCH KNOB	100
039	418725-6	MOTOR HOUSING	620
040	643760-7	BRUSH HOLDER	260
041	233121-5	COMPRESSION SPRING 4	60
042	418728-0	SWITCH LEVER B	90
043	418726-4	REAR COVER	180
044	266326-2	TAPPING SCREW 4X18	30
047	213445-5	O-RING 26	30
A01	781039-9	WRENCH 13	150

GD0603

Jul 2017

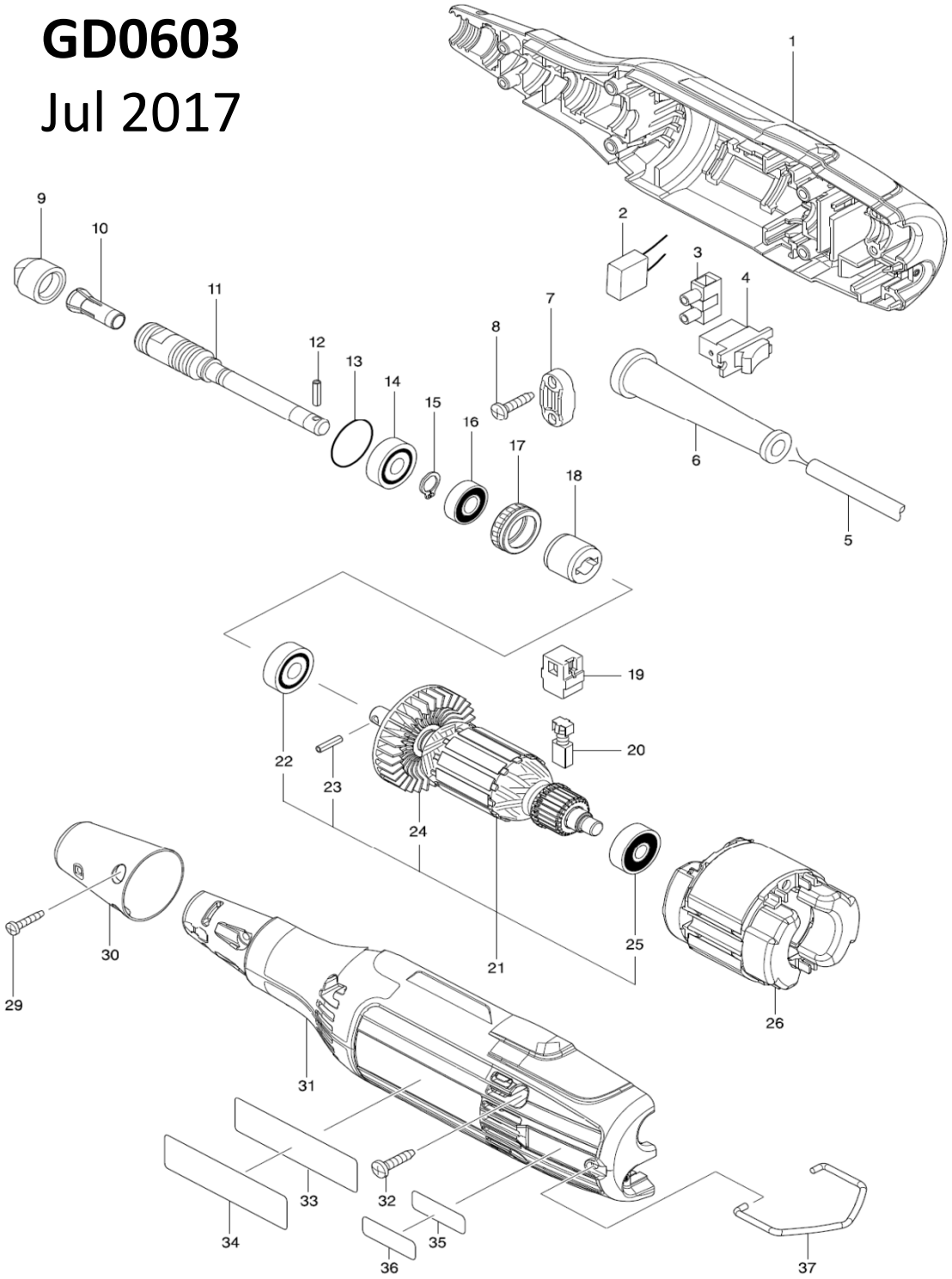

REF NO	PARTS NO	DESCRIPTION	ราคาตั้งบาท
1	183B62-6	HOUSING SET	690
1	263002-9	RUBBER PIN 4	30
4	651527-9	SWITCH	220
5	691065-9	POWER SUPPLY CORD 0.75-2-2.5	690
6	682569-2	CORD GUARD 8-85	110
7	687124-5	STRAIN RELIEF	70
8	266326-2	TAPPING SCREW 4X18	30
9	763236-9	COLLET NUT6	210
10	763620-8	COLLET CONE 6MM	760
11	321194-1	SPINDLE	1,940
12	258054-3	SPRING PIN 3-12	50
13	213961-7	O RING 22	100
14	211031-6	BALL BEARING 608LLB	190
15	961004-6	RETAINING RING S-8	20
16	211166-3	BALL BEARING 698DDW	
17	421479-6	RUBBER RING 19	290
18	456337-7	COUPLING	140
19	643566-3	BRUSH HOLDER 5X8	30
20	B-80254	CARBON BRUSH SET CB-64A	160
21	513433-5	ARMATURE ASS'Y 220V	
22	211031-6	BALL BEARING 608LLB	190
23	258054-3	SPRING PIN 3-12	50
023-1	256368-4	GROOVED PIN 3-12	
24	240085-6	FAN 48	110
25	210025-8	BALL BEARING 627LLB	250
26	593873-3	FIELD ASS'Y 220V	
26	654037-5	INSULATED TERM. FT1.25-M3	110
29	266429-2	TAPPING SCREW 3X16	50
30	346902-9	CAP	210
31	183B62-6	HOUSING SET	690
31	263002-9	RUBBER PIN 4	30
32	266326-2	TAPPING SCREW 4X18	30
33	851G50-8	GD0603 NAME PLATE	
34	807G77-6	CLEAR LABEL	
35	851G55-8	GD0603 SERIAL NO. LABEL	
36	807G78-4	CLEAR LABEL	
37	321193-3	HANGER	150
A01	781003-0	WRENCH 10	190
A02	741614-3	WHEEL POINT 1-19-60	250
A03	741615-1	WHEEL POINT 4-19-60	310
A04	741809-8	DRESSING STONE	

SERVICE DRAWING

MODEL NO. GD0800C

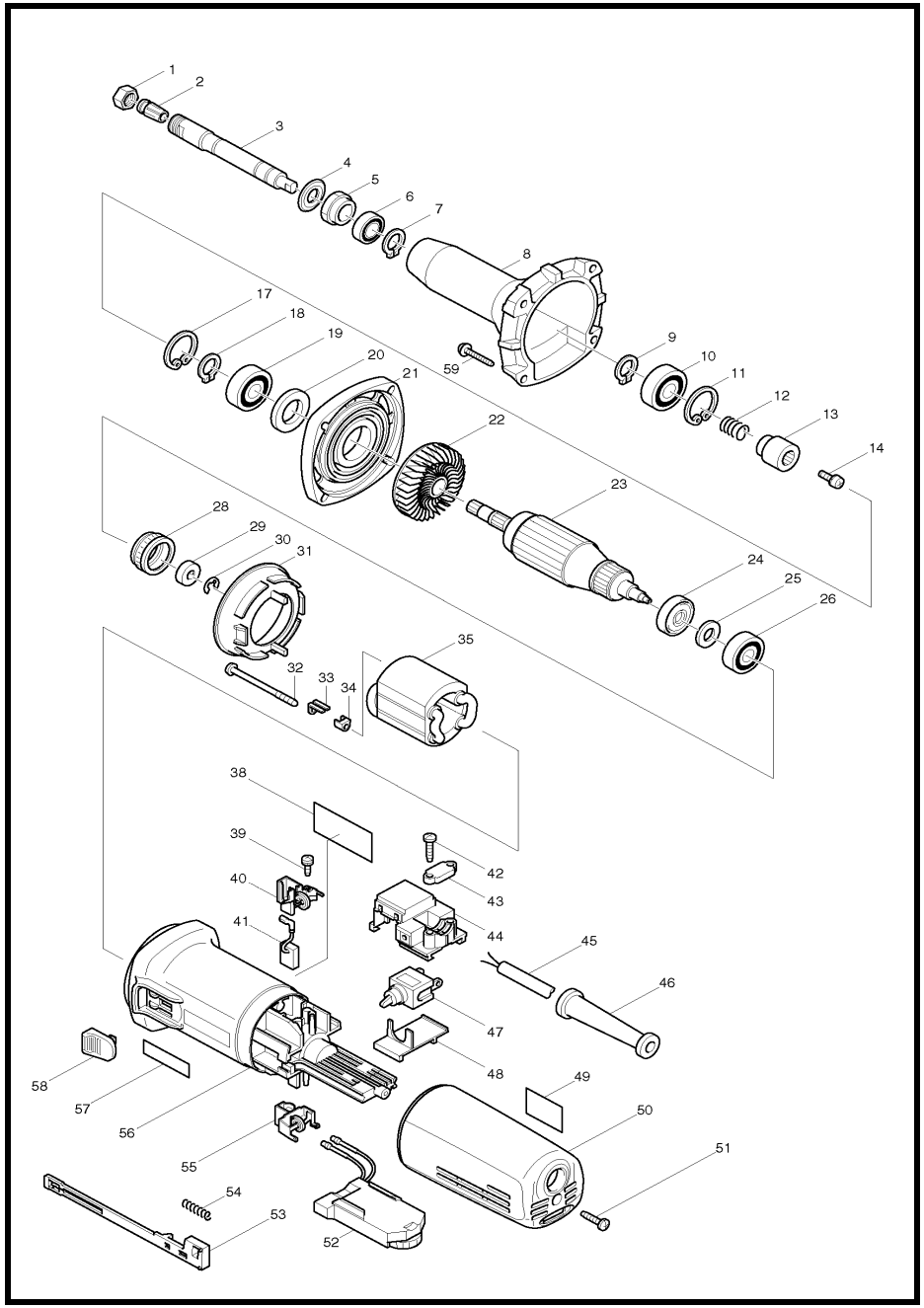

MODEL GD0800C

ITEM	PARTS ID	DESCRIPTION	PRICE/BAHT
001	763645-2	COLLET NUT	230
002	193012-1	COLLET CONE 6	1,460
003	324042-3	SPINDLE	1,630
004	213209-7	OIL SEAL 16	230
005	285700-5	BEARING RETAINER	600
006	211141-9	BALL BEARING 6901LLB	450
007	961052-5	RETAINING RING S-12	40
008	317368-0	BARREL	2,160
009	961052-5	RETAINING RING S-12	40
010	211148-5	BALL BEARING 6001ZZ	370
011	962106-1	RETAINING RING R-28	80
012	233901-9	LOCK SPRING 12	230
013	323989-8	COUPLING	990
014	265082-1	PAN HEAD SCREW M4X8	80
017	962106-1	RETAINING RING R-28	80
018	961052-5	RETAINING RING S-12	40
019	211148-5	BALL BEARING 6001ZZ	370
020	253084-9	FLAT WASHER 12	40
021	317367-2	BEARING BOX	1,120
023	515218-5	ARMATURE ASS'Y 220V	
024	681656-4	INSULATION WASHER	60
025	253823-7	FLAT WASHER 7	60
026	210023-2	BALL BEARING 627DDW	210
028	421770-2	LABYRINTH RUBBER RING 22	530
029	688117-5	MAGNET SLEEVE	230
030	259039-2	SELF LOCK 6	20
031	413076-2	BAFFLE PLATE	150
032	266259-1	TAPPING SCREW 4X60	80
033	344871-8	RETAINER	80
034	417237-6	INSULATION COVER	100
035	626523-6	FIELD 220V	
039	266256-7	TAPPING SCREW PT3X10	40
040	643760-7	BRUSH HOLDER	260
041	194999-0	A.C. CARBON BRUSH CB-318	540
042	265995-6	TAPPING SCREW 4X18	40
043	687053-2	STRAIN RELIEF	70
044	632999-7	SWITCH BLOCK	530
045	691015-4	POWER SUPPLY CORD 0.75-2-2.5	740
046	682566-8	CORD GUARD 10	80
047	651418-4	SWITCH ST115A-40	350
048	687113-0	COVER	100
049	816801-4	INDICATION LABEL	120
050	417185-9	REAR COVER	550
051	265995-6	TAPPING SCREW 4X18	40
052	631402-5	CONTROLLER	4,110
053	417187-5	SWITCH LEVER	160
054	233071-4	COMPRESSION SPRING 4	30
055	643760-7	BRUSH HOLDER	260
056	417812-8	MOTOR HOUSING	930
058	417813-6	SWITCH KNOB	100
059	265999-8	TAPPING SCREW 4X25	30
060	800092-7	INDICATION LABEL	80
A01	781203-2	WRENCH 13	230
A02	781206-6	WRENCH 19	310

SERVICE DRAWING

MODEL NO. GD0810C

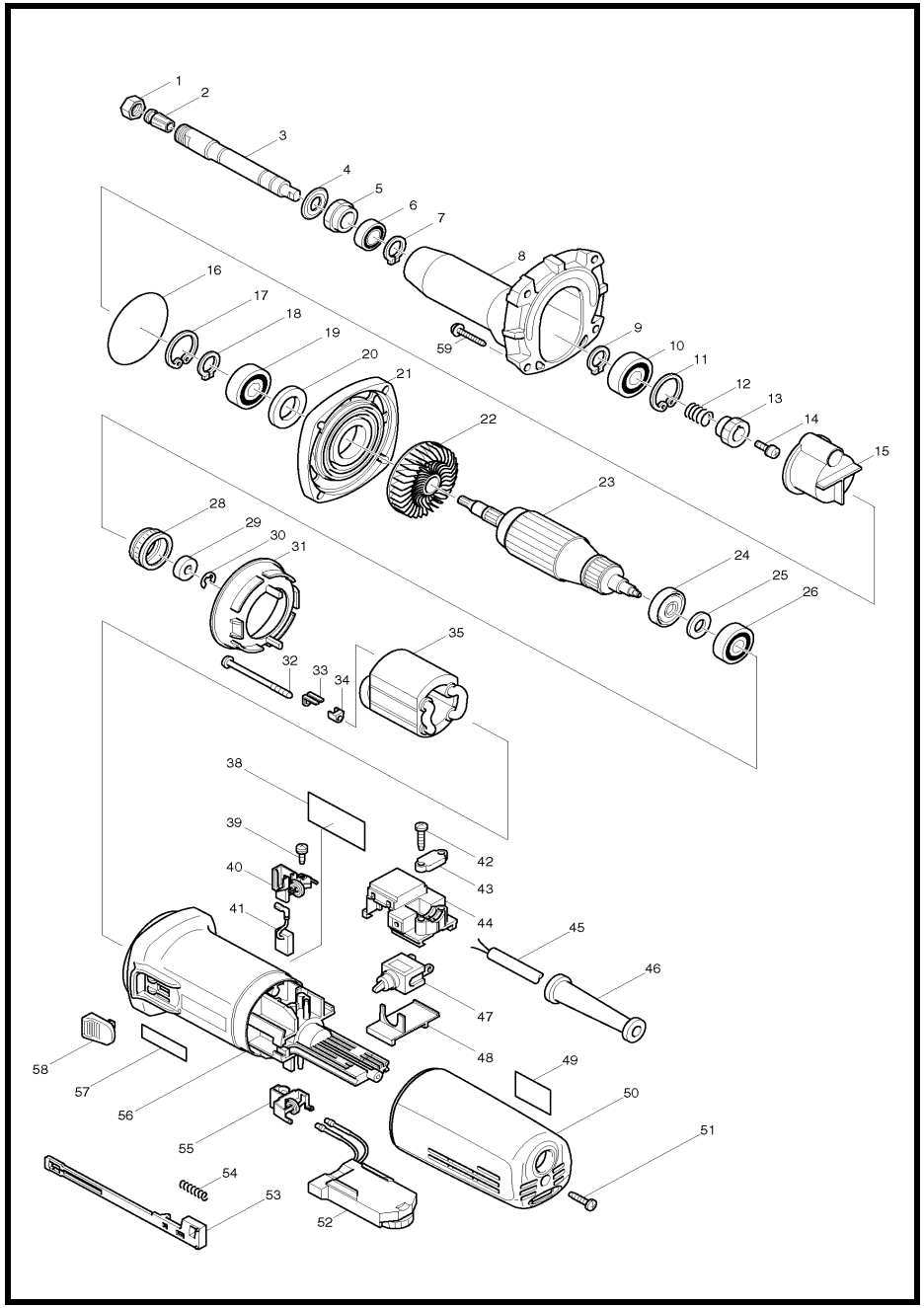

MODEL GD0810C

ITEM	PARTS ID	DESCRIPTION	PRICE/BAHT
001	763645-2	COLLET NUT	230
002	193012-1	COLLET CONE 6	1,460
003	324042-3	SPINDLE	1,630
004	213209-7	OIL SEAL 16	230
005	285700-5	BEARING RETAINER	600
006	211141-9	BALL BEARING 6901LLB	450
007	961052-5	RETAINING RING S-12	40
008	317369-8	BARREL	3,020
009	961052-5	RETAINING RING S-12	40
010	211148-5	BALL BEARING 6001ZZ	370
011	962106-1	RETAINING RING R-28	80
012	233901-9	LOCK SPRING 12	230
013	226531-3	HELICAL GEAR 25	990
014	265082-1	PAN HEAD SCREW M4X8	80
015	417363-1	GEAR COVER	230
016	213611-4	O RING 46	100
017	962106-1	RETAINING RING R-28	80
018	961052-5	RETAINING RING S-12	40
019	211148-5	BALL BEARING 6001ZZ	370
020	253084-9	FLAT WASHER 12	40
021	317367-2	BEARING BOX	1,120
023	515213-5	ARMATURE ASS'Y 220V	
024	681656-4	INSULATION WASHER	60
025	253823-7	FLAT WASHER 7	60
026	210023-2	BALL BEARING 627DDW	210
028	421770-2	LABYRINTH RUBBER RING 22	530
029	688117-5	MAGNET SLEEVE	230
030	259039-2	SELF LOCK 6	20
031	413076-2	BAFFLE PLATE	150
032	266259-1	TAPPING SCREW 4X60	80
033	344871-8	RETAINER	80
034	417237-6	INSULATION COVER	100
035	626528-6	FIELD 220V	
039	266256-7	TAPPING SCREW PT3X10	40
040	643760-7	BRUSH HOLDER	260
041	194999-0	A.C. CARBON BRUSH CB-318	540
042	265995-6	TAPPING SCREW 4X18	40
043	687053-2	STRAIN RELIEF	70
044	632999-7	SWITCH BLOCK	530
045	691015-4	POWER SUPPLY CORD 0.75-2-2.5	740
046	682566-8	CORD GUARD 10	80
047	651418-4	SWITCH ST115A-40	350
048	687113-0	COVER	100
049	816802-2	INDICATION LABEL	120
050	417185-9	REAR COVER	550
051	265995-6	TAPPING SCREW 4X18	40
052	631402-5	CONTROLLER	4,110
053	417187-5	SWITCH LEVER	160
054	233071-4	COMPRESSION SPRING 4	30
055	643760-7	BRUSH HOLDER	260
056	417812-8	MOTOR HOUSING	930
058	417813-6	SWITCH KNOB	100
059	265999-8	TAPPING SCREW 4X25	30

ITEM	PARTS ID	DESCRIPTION	PRICE/BAHT
A01	781203-2	WRENCH 13	230
A02	781206-6	WRENCH 19	310

SERVICE DRAWING

MODEL NO. GV6000

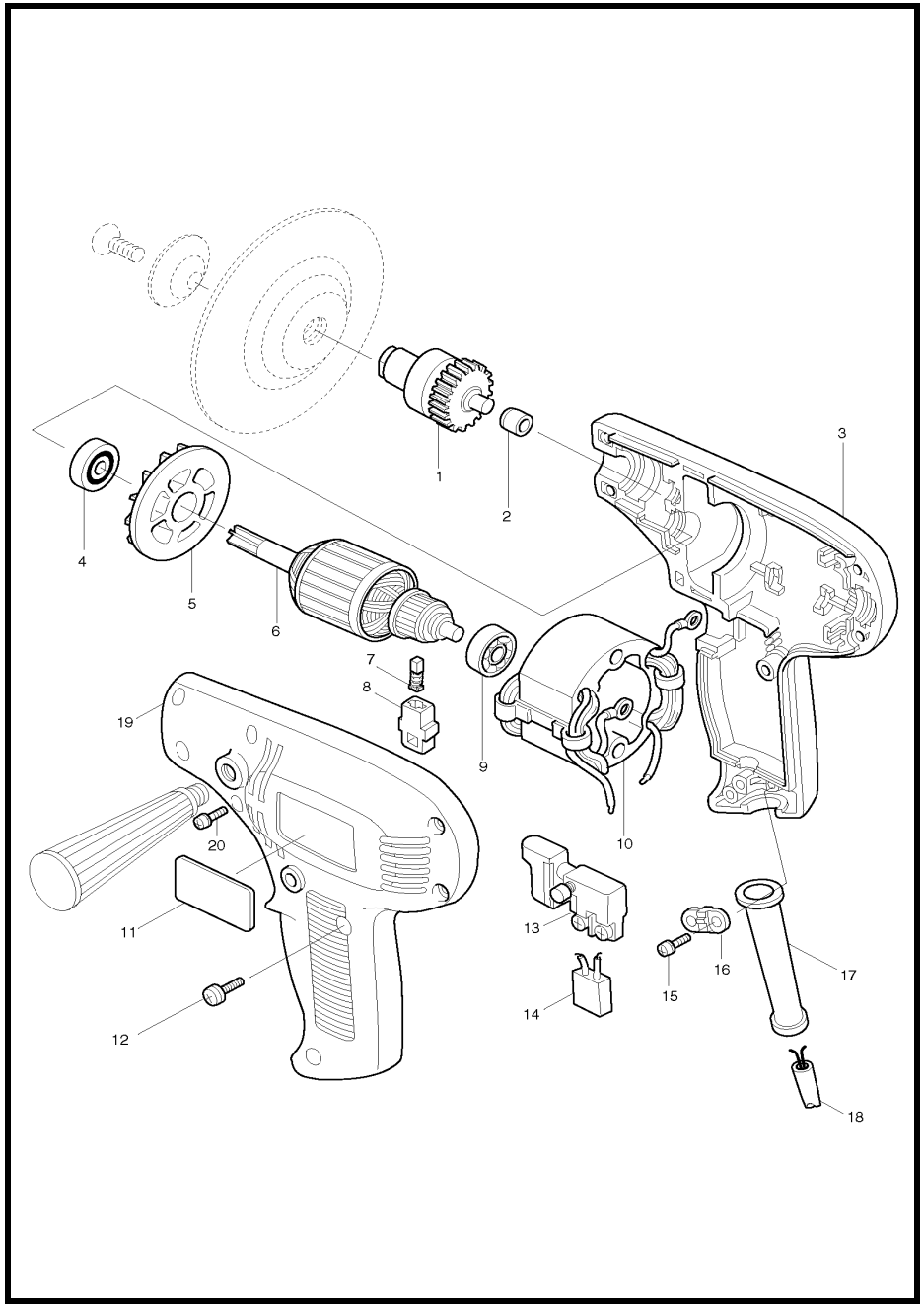

MODEL GV6000

ITEM	PARTS ID	DESCRIPTION	PRICE/BAHT
001	153119-5	GEAR COMPLETE	1,640
002	214004-8	PLANE BEARING 6	80
003	182314-0	HOUSING SET	1,670
004	211033-2	BALL BEARING 608LB	200
006	515118-9	ARMATURE ASS'Y 220V	
007	B-80254	CARBON BRUSH SET CB-64A	
008	643552-4	BRUSH HOLDER 5-8	100
009	211028-5	BALL BEARING 627LB	290
010	525103-4	FIELD ASS'Y 220V	
012	911138-5	PAN HEAD SCREW M4X20	50
013	651204-3	SWITCH SGEL115CDY	420
015	911133-5	PAN HEAD SCREW M4X18	50
016	687001-1	STRAIN RELIEF	50
017	682504-0	CORD GUARD 10-85	190
018	691015-4	POWER SUPPLY CORD 0.75-2-2.5	740
019	182314-0	HOUSING SET	1,670
020	911138-5	PAN HEAD SCREW M4X20	50
400	152491-2	GRIP 36 COMPLETE	230
401	794088-7	ABRASIVE DISC 150 #80	1,380
402	743025-8	PLASTIC PAD 120	370
403	265812-0	HEX. SOCKET HEAD BOLT M8X20	80
404	253951-8	WASHER 10	120
405	783203-8	HEX. WRENCH 5	100
406	410047-0	WRENCH HOLDER 5.6	100

SERVICE DRAWING

MODEL NO. HM0810T

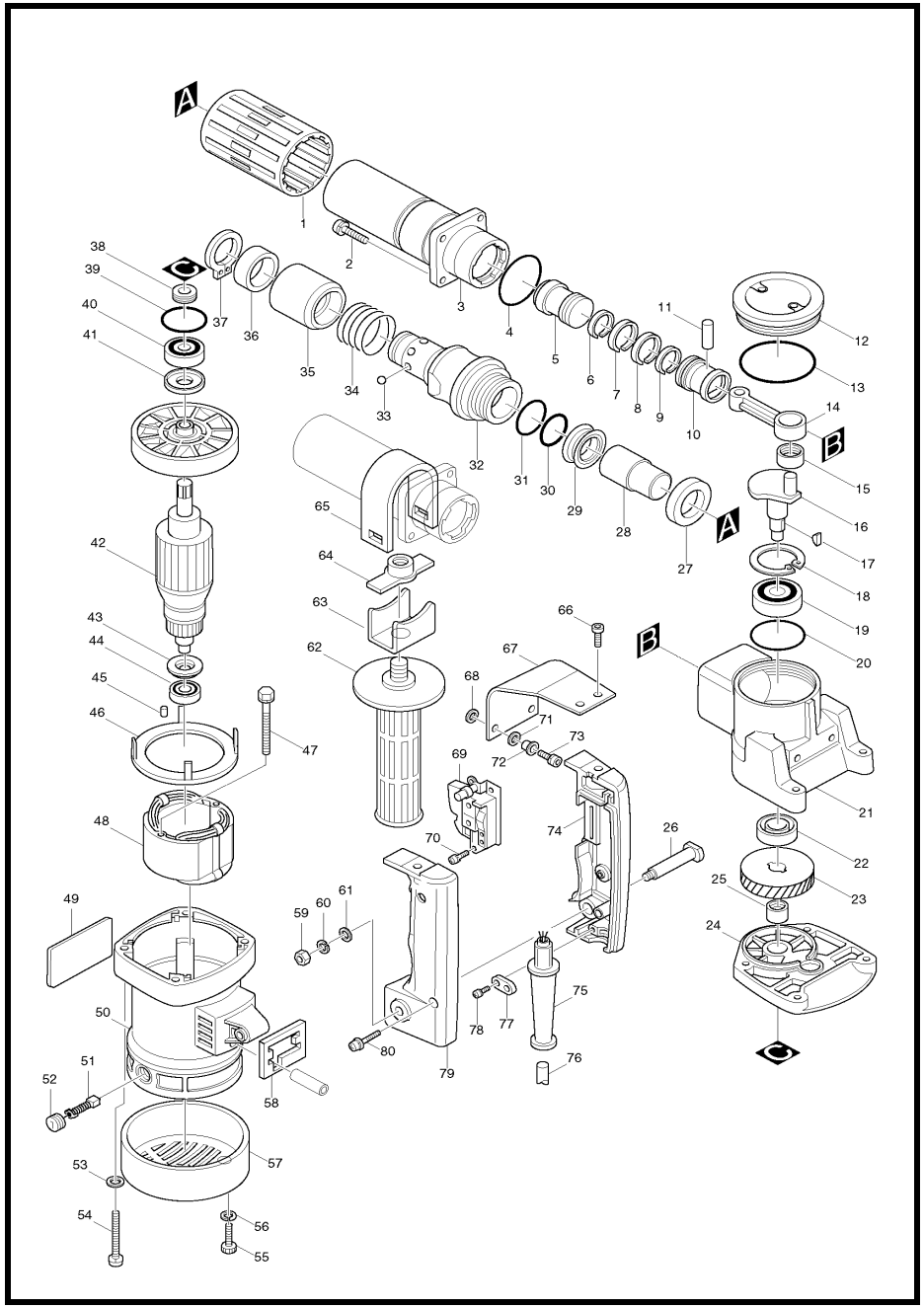

MODEL HM0810T

ITEM	PARTS ID	DESCRIPTION	PRICE/BAHT
001	421541-7	BARREL COVER	450
002	922341-3	HEX. SOCKET HEAD BOLT M6X25	90
003	151457-9	BARREL COMPLETE	5,570
004	213554-0	O RING 44	80
005	321929-0	STRIKER	680
006	412073-5	INNER RING 26	730
007	412053-1	PISTON RING 30	540
008	412053-1	PISTON RING 30	540
009	321514-9	INNER RING 26	230
010	321958-3	PISTON	680
011	256165-8	PIN 8	120
012	411709-3	CRANK CAP	400
013	213654-6	O RING 60	80
014	312956-8	ROD	970
015	212108-0	NEEDLE BEARING 1212	710
016	321954-1	CRANK SHAFT	1,120
017	254001-2	WOODRUFF KEY 4	80
018	962203-3	RETAINING RING R-47	120
019	211279-0	BALL BEARING 6303LLU	600
020	213606-7	O RING 48	80
021	157627-8	CRANK HOUSING COMPLETE	2,880
022	213260-7	OIL SEAL 17	230
023	221669-9	HELICAL GEAR 41	780
024	157628-6	GEAR HOUSING	1,300
025	212102-2	NEEDLE BEARING 1210	340
026	321210-9	HANDLE SHAFT	170
027	253955-0	FLAT WASHER 24	560
028	321495-7	IMPACT BOLT	710
029	213428-5	X RING 28	740
030	213411-2	O RING 27	80
031	213508-7	O RING 38	80
032	193004-0	TOOL HOLDER SET	5,360
033	216004-4	STEEL BALL 7.9	50
034	233191-4	COMPRESSION SPRING 30	170
035	331518-3	CHANGE RING	1,120
036	257206-3	RING 29	340
037	961108-4	RETAINING RING S-28	120
038	331194-3	SEAL	230
039	213459-4	O RING 32	50
040	211106-1	BALL BEARING 6201LLB	400
041	213102-5	DUST SEAL 12	130
042	516148-3	ARMATURE ASS'Y 220V	
043	681625-5	INSULATION WASHER	50
044	211031-6	BALL BEARING 608LLB	190
045	263014-2	RUBBER PIN 4	40
046	410509-8	BAFFLE PLATE	190
047	265345-5	+ HEX. BOLT M5X60	130
048	522508-9	FIELD ASS'Y 220V	
050	159634-7	MOTOR HOUSING	2,150
051	B-80307	CARBON BRUSH SET CB-105A	
052	643600-9	BRUSH HOLDER CAP 6-10	70
053	941151-9	FLAT WASHER 6	30
054	922371-4	HEX. SOCKET HEAD BOLT M6X50	110
055	922226-3	HEX. SOCKET HEAD BOLT M5X18	80
056	942101-7	SPRING WASHER 5	100
057	284059-7	REAR COVER	430
058	423257-0	SPONGE 38.5-46	80
059	931302-2	HEX. NUT M6	70
060	942151-2	SPRING WASHER 6	100
061	941151-9	FLAT WASHER 6	30
062	273457-0	GRIP 32	780
063	341922-8	GRIP BASE	230
064	321497-3	CLAMP NUT	320
065	341914-7	GRIP CLAMP	340
066	922316-2	HEX. SOCKET HEAD BOLT M6X14	90
067	343753-1	CUSHION PLATE	320
068	262051-3	RUBBER RING 9	80
069	651051-2	SWITCH HPAHR6-35S	1,610
070	911109-2	PAN HEAD SCREW M4X8	40
071	262052-1	RUBBER RING 9	50
072	257636-8	SLEEVE 6	170
073	265914-2	HEX. SOCKET HEAD BOLT M6X25	90
074	182590-6	HANDLE SET	950
075	682540-6	CORD GUARD 9.3-90	70
076	665883-1	POWER SUPPLY CORD 1.0-2-5.0	1,480
077	687031-2	STRAIN RELIEF	60
078	911133-5	PAN HEAD SCREW M4X18	50
079	182590-6	HANDLE SET	950
080	911243-8	PAN HEAD SCREW M5X25	30
081	267203-1	FLAT WASHER 43	120
A02	A-80450	BULL POINT 17X280	540
A03	783202-0	HEX. WRENCH 4	70
E03	652014-1	PAN HEAD SCREW M4X8	30
E04	652252-5	CLAMP WASHER	20
E13	782407-9	LOCK NUT WRENCH 35	320

SERVICE DRAWING

MODEL NO. HM1100

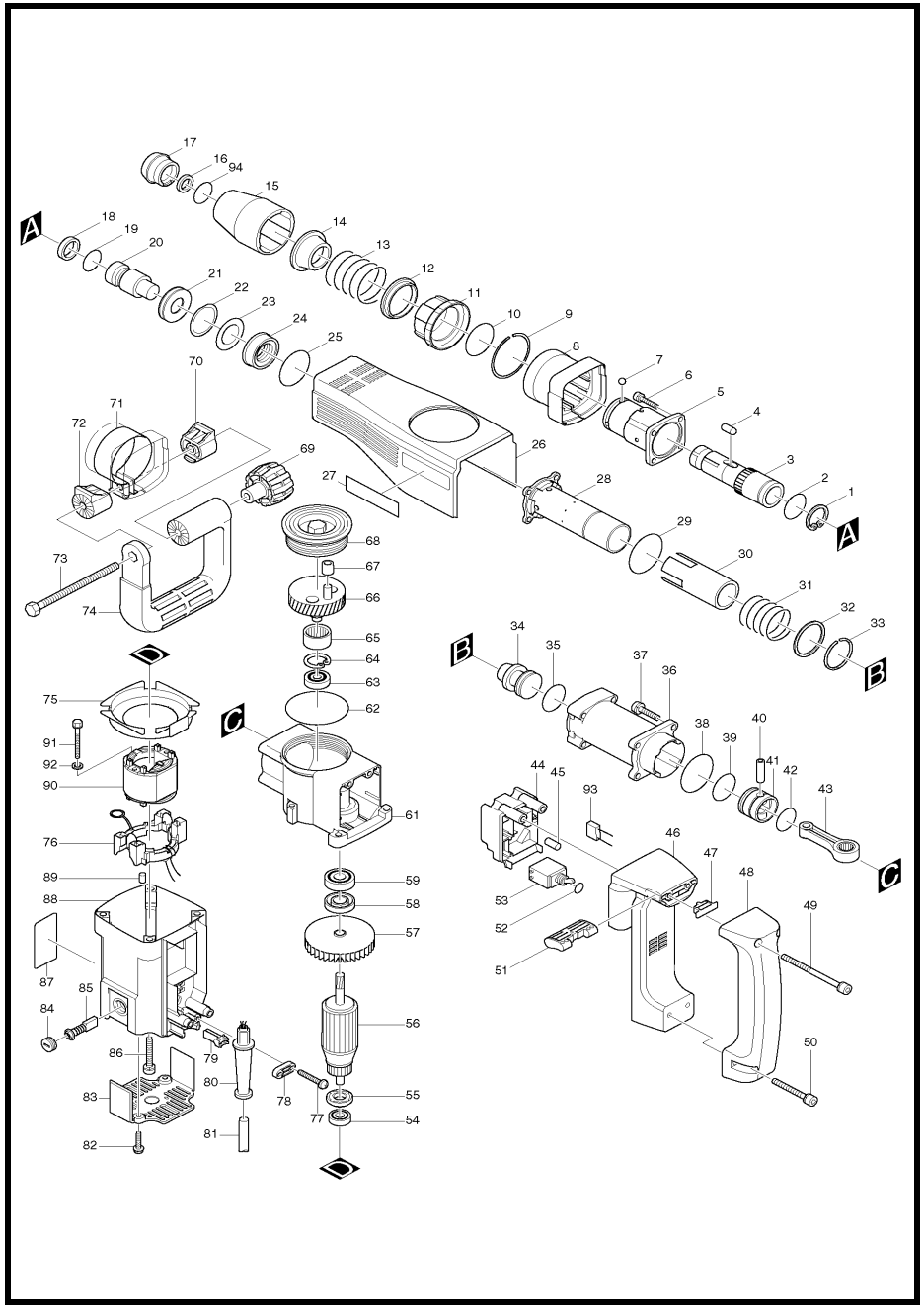

MODEL HM1100

ITEM	PARTS ID	DESCRIPTION	PRICE/BAHT
001	962154-0	RETAINING RING R-36	100
002	213479-8	O RING 33	80
003	322982-9	TOOL HOLDER	3,530
004	322908-1	ROLLER 8	160
005	322882-3	TOOL HOLDER SUPPORT	5,430
006	922351-0	HEX. SOCKET HEAD BOLT M6X30	80
007	216011-7	STEEL BALL 5.6	20
008	416086-8	SIDE HANDLE SUPPORT	390
009	231972-0	RING SPRING 52	80
010	213554-0	O RING 44	80
011	416087-6	CHANGE RING	290
012	331489-4	STEEL BALL GUIDE	560
013	233167-1	COMPRESSION SPRING 44	150
014	331504-4	ROLLER GUIDE	780
015	416085-0	TOOL HOLDER COVER	390
016	213270-4	X RING 18	250
017	286246-4	TOOL HOLDER CAP	190
018	213269-9	X RING 19	320
019	213311-6	O RING 19	150
020	323845-2	IMPACT BOLT	640
021	331487-8	IMPACT BOLT GUIDE	530
022	421570-0	RING 36	100
023	213391-2	O RING 25	490
024	331488-6	SLEEVE GUIDE	550
025	213554-0	O RING 44	80
026	415698-4	HOUSING COVER	1,050
028	322757-6	CYLINDER LINER 34	5,340
029	213614-8	O RING 50	100
030	331486-0	SLEEVE 39	1,770
031	233190-6	COMPRESSION SPRING 39	150
032	267156-4	FLAT WASHER 39	100
033	231971-2	RING SPRING 36	50
034	322907-3	STRIKER	730
035	213429-3	O RING 27	120
036	316672-4	BARREL	2,060
037	922351-0	HEX. SOCKET HEAD BOLT M6X30	80
038	213606-7	O RING 48	80
039	213429-3	O RING 27	120
040	256165-8	PIN 8	120
041	415773-6	PISTON	360
042	213415-4	O RING 28	80
043	415689-5	ROD	830
044	415699-2	SWITCH BOX	360
045	263002-9	RUBBER PIN 4	30
046	417447-5	CONTROLLER COVER	800
047	415692-6	STOPPER	150
048	421507-7	HANDLE	1,780
049	266135-9	HEX. SOCKET HEAD BOLT M6X90	190
050	922371-4	HEX. SOCKET HEAD BOLT M6X50	110
051	415691-8	SWITCH LEVER	160
052	213107-5	O RING 12	40
053	651481-7	SWITCH STE215K	1,370
054	211033-2	BALL BEARING 608LB	200
055	681650-6	INSULATION WASHER	390
056	510028-5	ARMATURE ASS'Y 220/240V	
058	213160-1	OIL SEAL 14	590
059	211129-9	BALL BEARING 6201DDW	300
061	134875-6	CRANK HOUSING ASS'Y	5,110
062	213707-1	O RING 65	80
063	210054-1	BALL BEARING 6000LLU	370
064	962105-3	RETAINING RING R-26	80
065	212259-9	NEEDLE BEARING 2116	1,180
066	153249-2	CRANK SHAFT COMPLETE	2,570
067	216116-3	INNER SLEEVE 812	510
068	415690-0	CRANK CAP	450
069	252640-2	WING NUT M8	380
070	417002-3	SIDE HANDLE CAM	150
071	152620-7	SIDE HANDLE BASE 60 COMPLETE	1,020
073	265439-6	HEX. BOLT M8X150	
074	417003-1	SIDE HANDLE	810
075	415693-4	BAFFLE PLATE	210
076	632678-7	SUPPORT COMPLETE	370
077	265995-6	TAPPING SCREW 4X18	40
078	687053-2	STRAIN RELIEF	70
079	416167-8	FIX ROD	160
080	682560-0	CORD GUARD 10	170
081	691025-1	POWER SUPPLY CORD 0.75-2-5.0	1,070
082	266021-4	TAPPING SCREW 5X20	60
083	415700-3	REAR COVER	270
084	643750-0	BRUSH HOLDER CAP	70
085	B-80385	CARBON BRUSH SET CB-327A	
086	922364-1	HEX. SOCKET HEAD BOLT M6X40	90
088	152662-1	MOTOR HOUSING COMPLETE	1,920
089	263014-2	RUBBER PIN 4	40
091	265345-5	+ HEX. BOLT M5X60	130
092	941102-2	FLAT WASHER 5	30
094	213385-7	O RING 24	150
095	417002-3	SIDE HANDLE CAM	150
A02	194683-7	GREASE VESSEL SET	520
B01	134909-5	SIDE HANDLE ASS'Y	2,110

SERVICE DRAWING

MODEL NO. HM1201

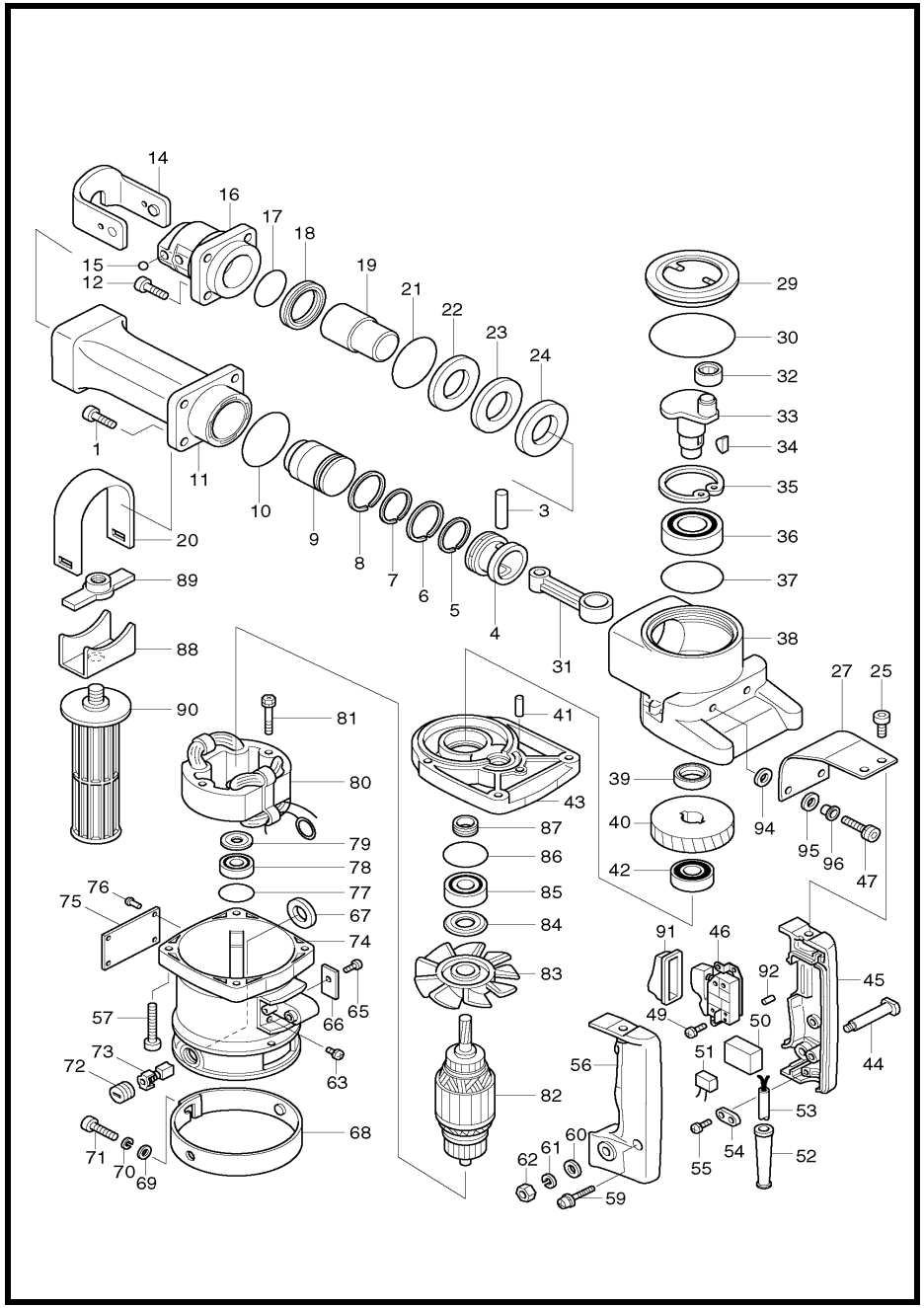

MODEL HM1201

ITEM	PARTS ID	DESCRIPTION	PRICE/BAHT
001	922451-6	HEX. SOCKET HEAD BOLT M8X30	90
003	256120-0	PIN 10	230
004	321441-0	PISTON	960
005	341862-0	INNER RING 36	890
006	412049-2	PISTON RING 40	760
007	341862-0	INNER RING 36	890
008	412049-2	PISTON RING 40	760
009	321447-8	STRIKER	1,220
010	213655-4	O RING 56	80
011	151310-9	BARREL COMPLETE	8,120
012	922451-6	HEX. SOCKET HEAD BOLT M8X30	90
014	164617-4	TOOL RETAINER	1,750
015	216003-6	STEEL BALL 10	80
016	321440-2	TOOL HOLDER	4,850
017	213464-1	O RING 34	150
018	213472-2	X RING 35	1,380
019	322107-5	IMPACT BOLT	2,040
020	341861-2	GRIP CLAMP	410
021	213604-1	O RING 50	90
022	253845-7	FLAT WASHER 31	460
023	261054-4	NYLON WASHER 32	250
024	267058-4	FLAT WASHER 32	680
025	922316-2	HEX. SOCKET HEAD BOLT M6X14	90
027	343755-7	CUSHION PLATE	370
029	414218-1	CRANK CAP	600
030	213754-2	O RING 71	100
031	315419-3	CONNECTING ROD	1,120
032	212208-6	NEEDLE BEARING 1516	870
033	152180-9	CRANK SHAFT COMPLETE	1,810
034	254001-2	WOODRUFF KEY 4	80
035	962251-2	RETAINING RING R-52	150
036	211327-5	BALL BEARING 6304LLU	710
037	213656-2	O RING 53	80
038	156863-3	CRANK HOUSING COMPLETE	3,750
039	213306-9	OIL SEAL 20	230
040	221701-9	HELICAL GEAR 50	1,220
041	256111-1	PIN 6	100
042	211209-1	BALL BEARING 6202	410
043	157072-7	GEAR HOUSING	1,970
044	321210-9	HANDLE SHAFT	170
045	182077-8	HANDLE SET	1,100
046	651145-3	SWITCH C3D-H-MS	1,730
047	265914-2	HEX. SOCKET HEAD BOLT M6X25	90
049	911129-6	PAN HEAD SCREW M4X16	50
052	682506-6	CORD GUARD 12-90	100
053	691346-1	POWER SUPPLY CORD 1.25-3-5.0	1,770
054	687034-6	STRAIN RELIEF	80
055	911133-5	PAN HEAD SCREW M4X18	50
056	182077-8	HANDLE SET	1,100
057	922366-7	HEX. SOCKET HEAD BOLT M6X45	110
059	911243-8	PAN HEAD SCREW M5X25	30
060	941151-9	FLAT WASHER 6	30
061	942151-2	SPRING WASHER 6	100
062	931302-2	HEX. NUT M6	70
063	652014-1	PAN HEAD SCREW M4X8	30
067	681002-1	INSULATION WASHER	30
068	341741-2	HOLDER BAND	320
069	941151-9	FLAT WASHER 6	30
070	942151-2	SPRING WASHER 6	100
071	922317-0	HEX. SOCKET HEAD BOLT M6X14	40
072	643650-4	BRUSH HOLDER CAP 6.5-13.5	70
073	B-80335	CARBON BRUSH SET CB-155A	
074	156862-5	MOTOR HOUSING	4,640
076	953106-2	RIVET 0-5	20
077	213406-5	O RING 30	30
078	211087-9	BALL BEARING 6200DDW	380
079	213051-6	DUST SEAL 10	120
080	524633-2	FIELD ASS'Y 220V	
081	265347-1	+ HEX. BOLT M5X45	120
082	514718-2	ARMATURE ASS'Y 220V	
084	213202-1	DUST SEAL 15	120
085	211206-7	BALL BEARING 6202LLB	460
086	213460-9	O RING 35	50
087	331180-4	SEAL	230
088	341860-4	GRIP BASE	270
089	321445-2	CLAMP NUT	490
090	273467-7	GRIP 32	800
091	421265-5	DUST COVER	190
092	263002-9	RUBBER PIN 4	30
094	262051-3	RUBBER RING 9	80
095	262052-1	RUBBER RING 9	50
096	257636-8	SLEEVE 6	170
402	D-16499	BULL POINT 320	480
404	783203-8	HEX. WRENCH 5	100
406	782407-9	LOCK NUT WRENCH 35	320

SERVICE DRAWING

MODEL NO. HM1203C

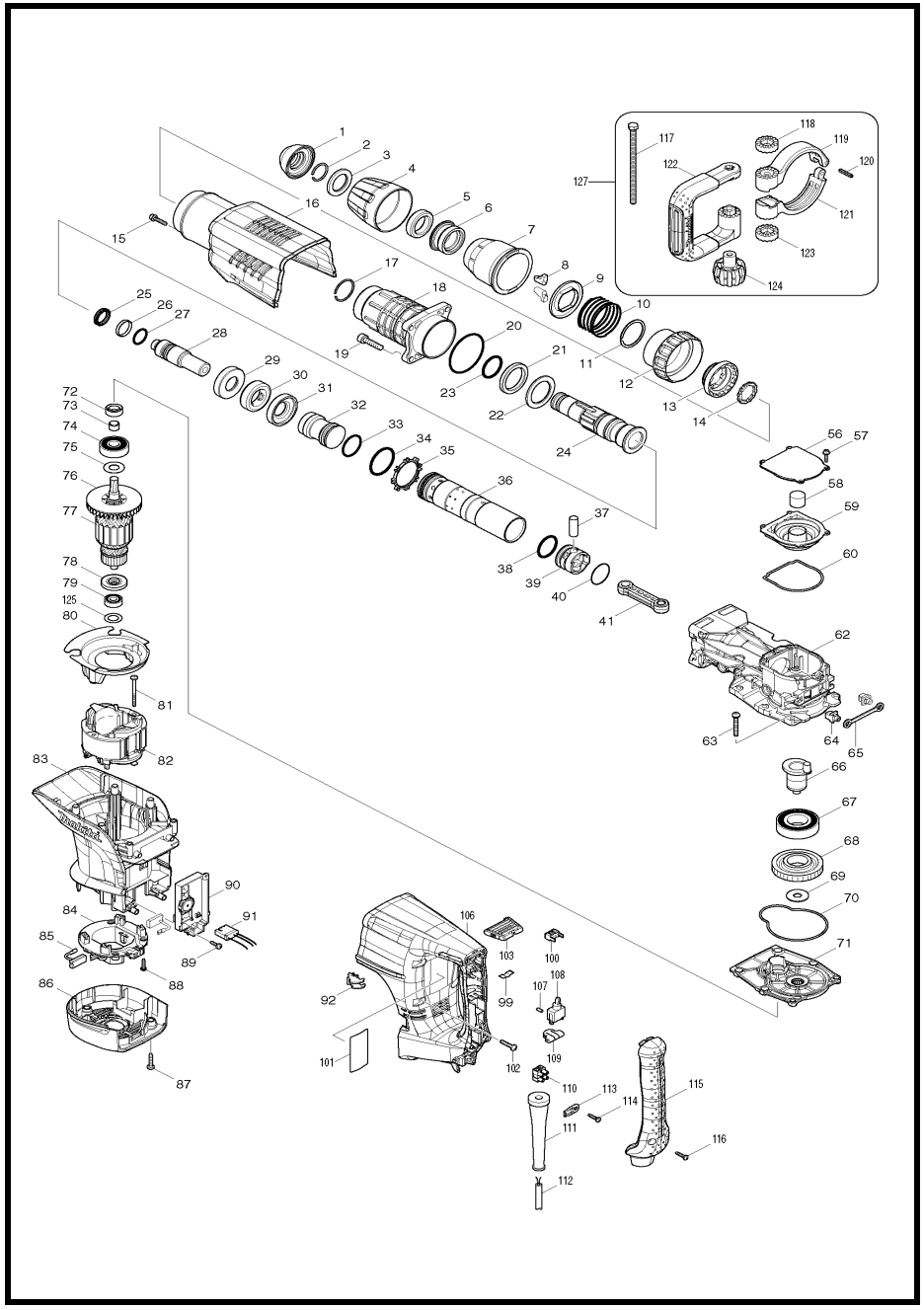

MODEL HM1203C

ITEM	PARTS ID	DESCRIPTION	PRICE/BAHT	ITEM	PARTS ID	DESCRIPTION	PRICE/BAHT
001	424165-8	TOOL HOLDER CAP	180	069	267398-0	FLAT WASHER 12	130
002	233973-4	RING SPRING 26	110	070	424167-4	SEAL RING	110
003	267386-7	FLAT WASHER 30	380	071	158859-0	GEAR HOUSING COMPLETE	2,190
004	450894-7	CHUCK COVER	230	072	213231-4	OIL SEAL 15	390
005	262147-0	RUBBER RING 30	270	073	331596-3	SLEEVE 12	90
006	324987-5	CHUCK RING	940	074	211249-9	BALL BEARING 6302LLU	620
007	450895-5	RELEASE COVER	270	075	267397-2	FLAT WASHER 15	110
008	310279-8	TOOL RETAINER	310	077	517818-7	ARMATURE ASS'Y 220-240V	
009	346015-6	SPRING GUIDE	200	078	681642-5	INSULATION WASHER	570
010	234086-4	COMPRESSION SPRING 56	230	079	211289-7	BALL BEARING 6000DDW	540
011	961232-3	RETAINING RING WR-45	160	080	450900-8	BAFFLE PLATE	190
012	450893-9	CHANGE RING COVER	250	081	266095-5	TAPPING SCREW 5X55	120
013	324969-7	CHANGE RING	1,750	082	636303-2	FIELD 220-240V	
014	324988-3	LOCK RING	1,060	083	450904-0	MOTOR HOUSING	1,960
015	922243-3	HEX. SOCKET HEAD BOLT M5X25	120	084	638447-4	BRUSH HOLDER UNIT	560
016	450903-2	HOUSING COVER	1,240	085	195845-0	CARBON BRUSH CB-175	
017	233970-0	RING SPRING 35	110	086	450901-6	REAR COVER	600
018	158858-2	BARREL COMPLETE	4,550	087	266041-8	TAPPING SCREW 5X25	60
019	922456-6	HEX. SOCKET HEAD BOLT M8X35	110	088	265995-6	TAPPING SCREW 4X18	40
020	213720-9	O RING 67	90	089	266192-7	TAPPING SCREW 4X14	50
021	262148-8	RUBBER RING 39	200	090	631869-7	CONTROLLER	
022	267387-5	FLAT WASHER 39	350	091	638650-7	LEAD UNIT	380
023	213079-4	O-RING 35.5	190	092	419010-0	LENS	130
024	324985-9	TOOL HOLDER	7,820	099	232209-8	LEAF SPRING	90
025	213980-3	X-RING 21	270	100	450891-3	LEVER STOPPER	140
026	213431-6	FLUORIDE RING 28	780	102	266041-8	TAPPING SCREW 5X25	60
027	213394-6	O RING 23	90	103	450897-1	SLIDE LEVER	210
028	324990-6	IMPACT BOLT	1,370	106	450907-4	HANDLE	2,210
029	324993-0	SHOULDER SLEEVE	590	107	263027-3	RUBBER PIN 4	50
030	262149-6	RUBBER RING 24	360	108	651423-1	SWITCH	710
031	324993-0	SHOULDER SLEEVE	590	109	423379-6	SPONGE SHEET	40
032	326002-1	STRIKER	2,720	110	654531-7	TERMINAL BLOCK 2P	190
033	213499-2	O-RING 31.5	270	111	682560-0	CORD GUARD 10	170
034	213581-7	O-RING 44	190	112	691025-1	POWER SUPPLY CORD 0.75-2-5.0	1,070
035	450889-0	ONE WAY VALVE GUIDE	140	113	687169-3	STRAIN RELIEF	60
036	331925-0	CYLINDER 40	2,010	114	265995-6	TAPPING SCREW 4X18	40
037	268121-6	PIN 12	80	115	450908-2	HANDLE COVER	880
038	213499-2	O-RING 31.5	270	116	265995-6	TAPPING SCREW 4X18	40
039	450961-8	PISTON	480	117	265439-6	HEX. BOLT M8X150	190
040	213149-9	O RING 35	130	118	417002-3	SIDE HANDLE CAM	150
041	450890-5	CONNECTING ROD	460	119	318505-9	SIDE HANDLE BASE 82A	590
056	450899-7	CRANK CAP COVER	210	120	951166-8	SPRING PIN 5-24	50
057	911133-5	PAN HEAD SCREW M4X18	50	121	318506-7	SIDE HANDLE BASE 82B	660
058	443127-7	FILTER	80	122	417003-1	SIDE HANDLE	810
059	450898-9	CRANK CAP	250	123	417002-3	SIDE HANDLE CAM	150
060	424166-6	SEAL RING	90	124	252640-2	WING NUT M8	380
062	318364-1	CRANK HOUSING	7,000	125	267164-5	FLAT WASHER 15	70
063	266482-8	H.S.BUTTON HEAD SCREW M6X40	80	127	135269-8	SIDE HANDLE 82 ASS'Y	2,960
064	419008-7	FIX GUIDE	70	A01	A-80787	BULL POINT 280 SDS-MAX	1,120
065	423366-5	CUSHION PLATE	90	A02	194683-7	GREASE VESSEL SET	520
066	324994-8	CRANK SHAFT	810	A03	443122-7	CLOTH	220
067	211424-7	BALL BEARING 6206LLU	910	A04	824876-9	PLASTIC CARRRYING CASE	
068	226691-1	HELICAL GEAR 57	1,970	A05	194990-8	CARBON BRUSH CB-171	

SERVICE DRAWING

MODEL NO. HM1214C

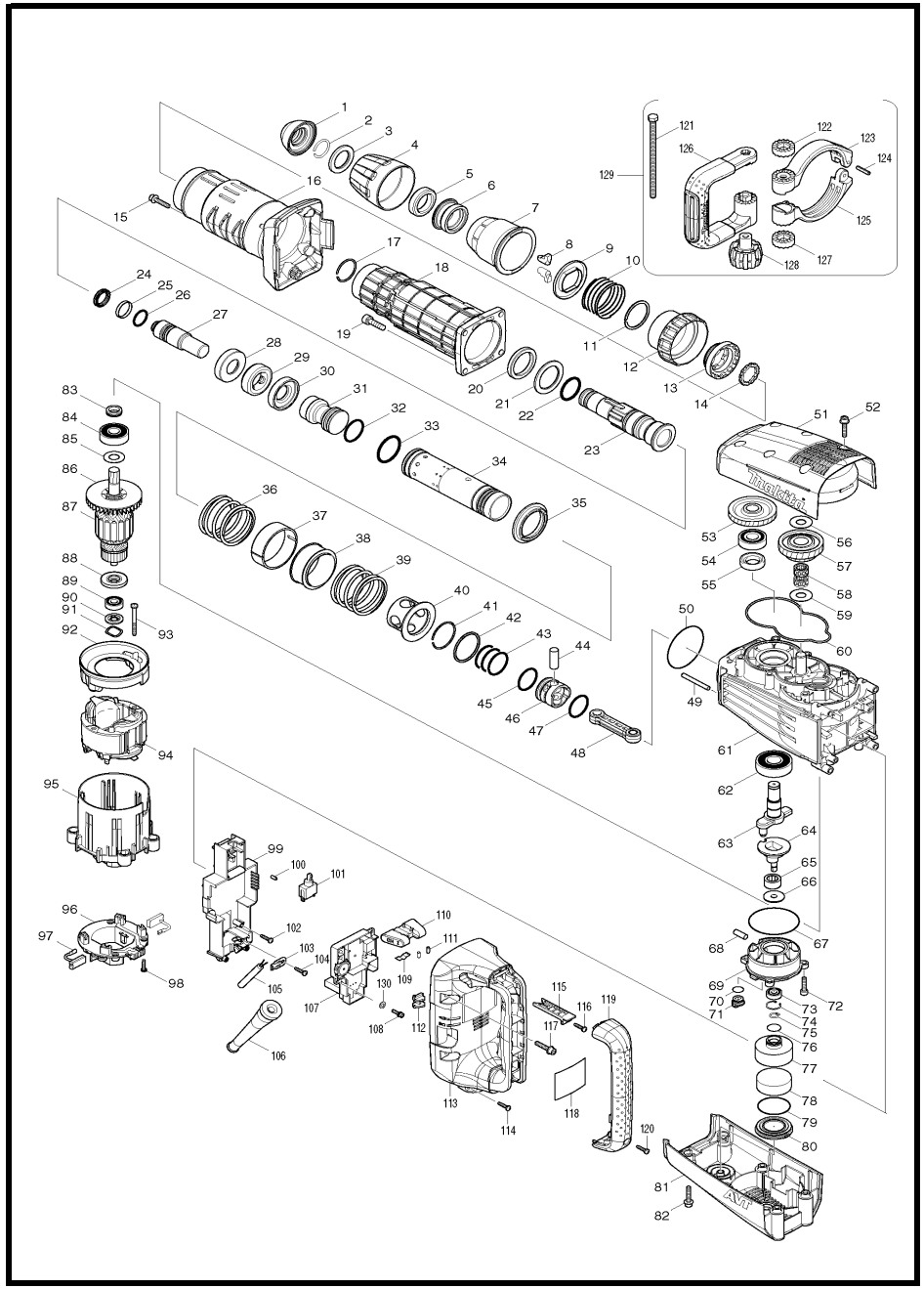

MODEL HM1214C

ITEM	PARTS ID	DESCRIPTION	PRICE/BAHT	ITEM	PARTS ID	DESCRIPTION	PRICE/BAHT
001	424165-8	TOOL HOLDER CAP	180	054	211290-2	BALL BEARING 6203ZZ	440
002	233973-4	RING SPRING 26	110	055	213313-2	OIL SEAL 20	330
003	267386-7	FLAT WASHER 30	380	056	267166-1	FLAT WASHER 14	130
004	450894-7	CHUCK COVER	230	057	226155-5	GEAR COMPLETE 34-48	3,480
005	262147-0	RUBBER RING 30	270	058	212159-3	NEEDLE CAGE 1412	310
006	324987-5	CHUCK RING	940	059	267166-1	FLAT WASHER 14	130
007	450895-5	RELEASE COVER	270	060	424196-7	SEAL RING	110
008	310279-8	TOOL RETAINER	310	061	158983-9	CRANK HOUSING COMPLETE	11,290
009	346015-6	SPRING GUIDE	200	062	211327-5	BALL BEARING 6304LLU	710
010	234086-4	COMPRESSION SPRING 56	230	063	325659-5	CRANK SHAFT	730
011	961232-3	RETAINING RING WR-45	160	064	325660-0	COUNTER SHAFT	2,550
012	450893-9	CHANGE RING COVER	250	065	212225-6	NEEDLE BEARING 1613	880
013	324969-7	CHANGE RING	1,750	066	325662-6	SHOULDER WASHER 8	160
014	324988-3	LOCK RING	1,060	067	213754-2	O RING 71	100
015	266499-1	H.S HEAD BOLT M6X30 WITH GM	110	068	268222-0	PIN 8	310
016	451113-4	BARREL COVER	1,350	069	158985-5	BEARING BOX COMPLETE	2,050
017	233970-0	RING SPRING 35	110	070	213176-6	O RING 14	30
018	141786-8	BARREL COMPLETE	5,020	071	451104-5	GREASE CAP	190
019	266010-9	HEX. SOCKET HEAD BOLT M8X30	120	072	266087-4	HEX.BOLT M6X25	90
020	262148-8	RUBBER RING 39	200	073	211032-4	BALL BEARING 608ZZ	200
021	267387-5	FLAT WASHER 39	350	074	962112-6	RETAINING RING R-22	80
022	213079-4	O-RING 35.5	190	075	961004-6	RETAINING RING S-8	20
023	324985-9	TOOL HOLDER	7,820	076	213262-3	O RING 18	40
024	213980-3	X-RING 21	270	077	451108-7	FILTER CASE	270
025	213431-6	FLUORIDE RING 28	780	078	443147-1	FILTER	180
026	213394-6	O RING 23	90	079	213569-7	O RING 45	80
027	325681-2	IMPACT BOLT	1,120	080	451109-5	FILTER CASE COVER	230
028	324993-0	SHOULDER SLEEVE	590	081	451116-8	REAR COVER	1,370
029	262149-6	RUBBER RING 24	360	082	266499-1	H.S HEAD BOLT M6X30 WITH GM	110
030	324993-0	SHOULDER SLEEVE	590	083	331855-5	SEALING SCREW	130
031	325680-4	STRIKER	1,190	084	211249-9	BALL BEARING 6302LLU	620
032	213499-2	O-RING 31.5	270	085	267397-2	FLAT WASHER 15	110
033	213581-7	O-RING 44	190	087	517838-1	ARMATURE ASSEMBLY 220-240V	
034	331856-3	CYLINDER 40	5,710	088	681642-5	INSULATION WASHER	570
035	451110-0	CYLINDER GUIDE	230	089	210059-1	BALL BEARING 6000DDW	300
036	234107-2	COMPRESSION SPRING 58	410	090	451107-9	WASHER GUIDE	150
037	451103-7	WEIGHT GUIDE	330	091	267809-5	WAVE WASHER 19	50
038	331854-7	COUNTER WEIGHT	380	092	451111-8	BAFFLE PLATE	230
039	234107-2	COMPRESSION SPRING 58	410	093	266095-5	TAPPING SCREW 5X55	120
040	325661-8	SLIDE SLEEVE	1,780	094	636303-2	FIELD 220-240V	
041	231985-1	RING SPRING 43	50	095	451117-6	MOTOR HOUSING	910
042	257297-4	RING 45	330	096	638447-4	BRUSH HOLDER UNIT	560
043	213510-0	O RING 36	70	098	265995-6	TAPPING SCREW 4X18	40
044	268121-6	PIN 12	80	099	158986-3	CONTROLLER COVER COMPLETE	660
045	213499-2	O-RING 31.5	270	100	263027-3	RUBBER PIN 4	50
046	450961-8	PISTON	480	101	651423-1	SWITCH	710
047	213149-9	O RING 35	130	102	265995-6	TAPPING SCREW 4X18	40
048	450890-5	CONNECTING ROD	460	103	687169-3	STRAIN RELIEF	60
049	268235-1	PIN 6	380	104	265995-6	TAPPING SCREW 4X18	40
050	213754-2	O RING 71	100	105	691025-1	POWER SUPPLY CORD 0.75-2-5.0	1,070
051	451115-0	GEAR COVER	1,410	106	682560-0	CORD GUARD 10	170
052	266499-1	H.S HEAD BOLT M6X30 WITH GM	110	107	631883-3	CONTROLLER	4,010
053	226699-5	HELICAL GEAR 52	1,110	108	266834-3	H.S.H.BOLT M4X18 WITH GM	70

SERVICE DRAWING

MODEL NO. HM1214C

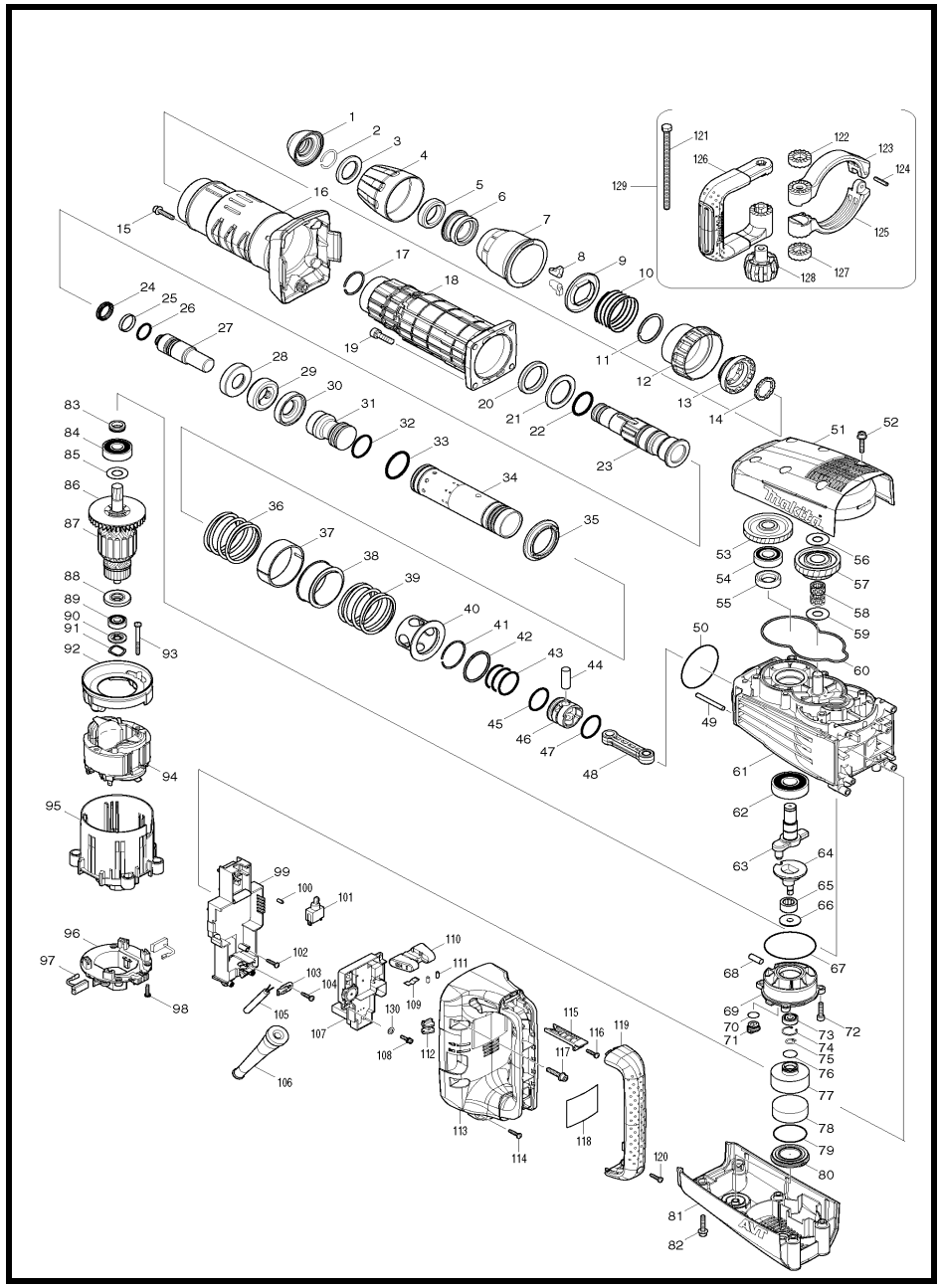

MODEL HM1214C

ITEM	PARTS ID	DESCRIPTION	PRICE/BAHT
109	232209-8	LEAF SPRING	90
110	451112-6	SLIDE LEVER	230
111	263027-3	RUBBER PIN 4	50
112	451105-3	LENS	160
113	451118-4	HANDLE	1,790
114	265995-6	TAPPING SCREW 4X18	40
115	451106-1	SWITCH LEVER	180
116	265995-6	TAPPING SCREW 4X18	40
117	266499-1	H.S HEAD BOLT M6X30 WITH GM	110
119	451119-2	HANDLE COVER	910
120	265995-6	TAPPING SCREW 4X18	40
121	265439-6	HEX. BOLT M8X150	190
122	417002-3	SIDE HANDLE CAM	150
123	318430-4	SIDE HANDLE BASE 90A	640
124	951166-8	SPRING PIN 5-24	50
125	318431-2	SIDE HANDLE BASE 90B	570
126	417003-1	SIDE HANDLE	810
127	417002-3	SIDE HANDLE CAM	150
128	252640-2	WING NUT M8	380
129	135283-4	SIDE HANDLE 90 ASSEMBLY	2,640
130	346546-5	PLATE	70
A01	A-80787	BULL POINT 280 SDS-MAX	1,120
A02	194683-7	GREASE VESSEL SET	520
A03	443122-7	CLOTH	220

SERVICE DRAWING

MODEL NO. HM1302

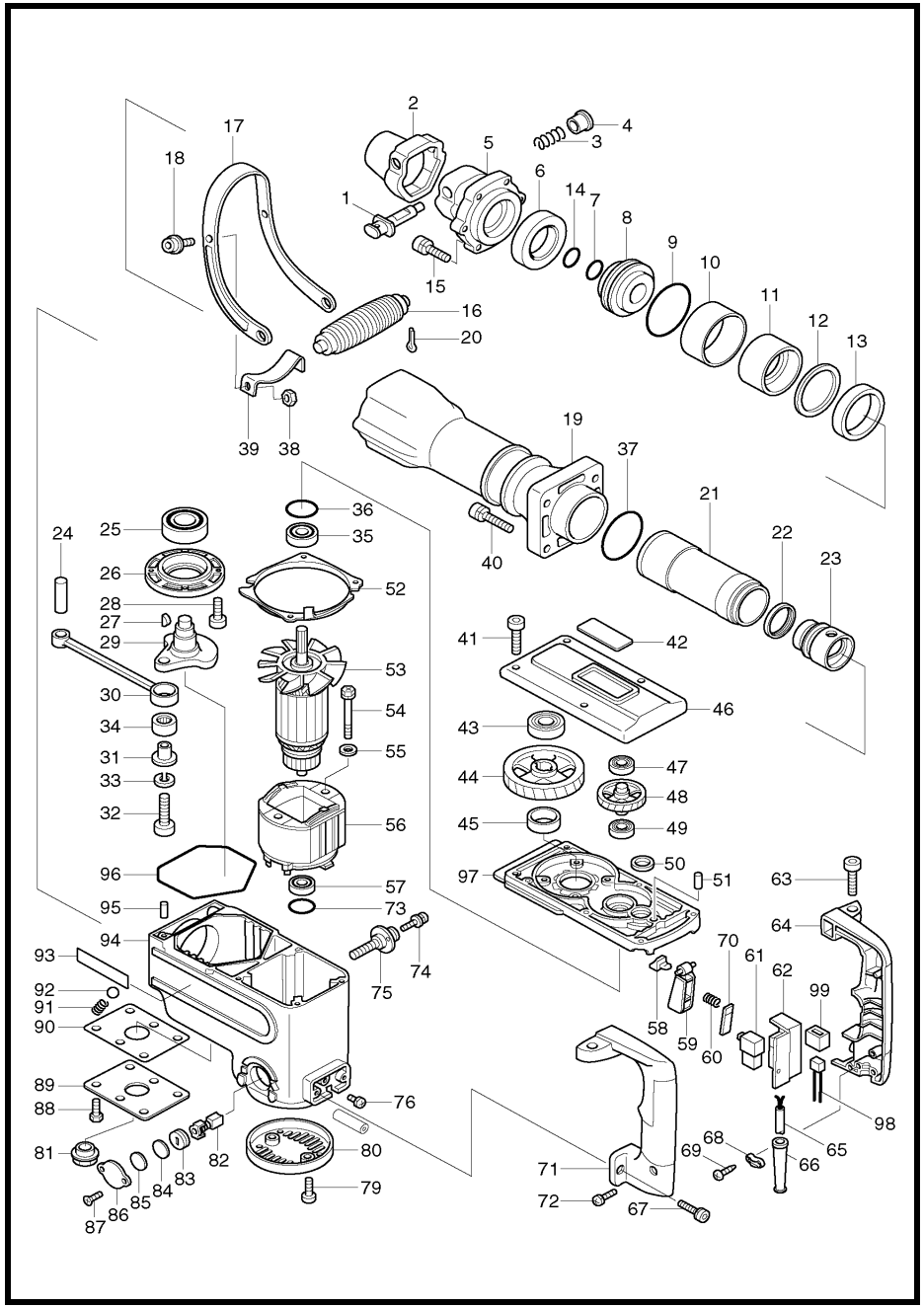

MODEL HM1302

ITEM	PARTS ID	DESCRIPTION	PRICE/BAHT
001	322986-1	TOOL RETAINER	1,380
003	233142-7	COMPRESSION SPRING 14	100
004	322987-9	RETAINER SLEEVE	340
005	322817-4	TOOL HOLDER	5,140
006	262067-8	URETHANE RING 46	870
007	213388-1	O RING 24	230
008	322816-6	SEAL HOLDER	1,360
009	213707-1	O RING 65	80
010	262536-9	RUBBER SLEEVE 64	230
011	322815-8	IDLER	2,720
012	267146-7	FLAT WASHER 58	320
013	262068-6	URETHANE RING 59	560
014	213388-1	O RING 24	230
015	266010-9	HEX. SOCKET HEAD BOLT M8X30	120
016	273492-8	GRIP 38	600
017	344272-0	SIDE HANDLE	920
018	922431-2	HEX. SOCKET HEAD BOLT M8X20	260
019	316731-4	BARREL	8,680
020	952257-8	SPLIT PIN 3.0-20	30
021	322814-0	HAMMER	6,060
022	213477-2	Y RING 34	360
023	322813-2	PISTON	3,210
024	256238-7	PIN 12	230
025	211373-8	BALL BEARING 6205LLU	620
026	316730-6	BEARING BOX	620
027	254001-2	WOODRUFF KEY 4	80
028	265366-7	HEX. SOCKET HEAD BOLT M6X22	100
029	322811-6	CRANK SHAFT	2,720
030	322812-4	CONNECTING ROD	1,500
031	321825-2	CRANK SLEEVE	510
032	922557-0	HEX. SOCKET HEAD BOLT M10X35	110
033	942251-8	SPRING WASHER 10	50
034	212260-4	NEEDLE BEARING 1716	1,080
035	211228-7	BALL BEARING 6202DDW	430
036	213460-9	O RING 35	50
037	213707-1	O RING 65	80
038	252005-8	HEX. NUT M8-13	130
039	344271-2	HANDLE CLAMP	150
040	265367-5	HEX. SOCKET HEAD BOLT M8X40	150
041	922371-4	HEX. SOCKET HEAD BOLT M6X50	110
042	857911-8	NAME PLATE HM1302	100
043	211214-8	BALL BEARING 6302	560
044	226450-3	HELICAL GEAR 57	2,130
045	257196-0	RING 25	200
046	316732-2	GEAR HOUSING COVER	2,540
047	211109-5	BALL BEARING 6201	270
048	226449-8	HELICAL GEAR 34	1,930
049	211104-5	BALL BEARING 6001	410
050	331212-7	SEAL	230
051	256111-1	PIN 6	100
052	344273-8	BAFFLE PLATE	230
053	516643-3	ARMATURE ASS'Y 220/240V	
054	265428-1	+ HEX. BOLT M5X65	120
056	636103-0	FIELD 220/240V	
057	211087-9	BALL BEARING 6200DDW	380
058	415805-9	LOCK BUTTON	100
059	415120-1	SWITCH LEVER	160
060	231457-6	COMPRESSION SPRING 3	50
061	651922-3	SWITCH TG71B	850
062	421529-7	SWITCH BOX	250
063	922376-4	HEX. SOCKET HEAD BOLT M6X55	120
064	182772-0	HANDLE SET	2,350
065	691157-4	POWER SUPPLY CORD 0.75-3-5.0	1,530
066	682505-8	CORD GUARD 10-90	150
067	922351-0	HEX. SOCKET HEAD BOLT M6X30	80
068	687053-2	STRAIN RELIEF	70
069	265995-6	TAPPING SCREW 4X18	40
070	415806-7	LOCK PLATE	120
071	182772-0	HANDLE SET	2,350
072	265995-6	TAPPING SCREW 4X18	40
073	213406-5	O RING 30	30
074	911124-6	PAN HEAD SCREW M4X14	30
075	155251-1	PLUNGER	1,270
076	652014-1	PAN HEAD SCREW M4X8	30
079	922211-6	HEX. SOCKET HEAD BOLT M5X12	50
080	284067-8	REAR COVER	360
081	242502-2	OIL GAUGE	550
082	B-80357	CARBON BRUSH SET CB-204A	
083	643700-5	BRUSH HOLDER CAP 7-18	110
084	421034-4	CAP RUBBER	80
085	421034-4	CAP RUBBER	80
086	344270-4	HOLDER CAP PLATE	150
087	912111-8	COUNTERSUNK HEAD SCREW M4X10	30
088	925216-5	+ HEX. BOLT M5X14	30
089	150560-3	OIL TANK COVER COMPLETE	360
090	442122-4	OIL TANK PACKING	130
091	233132-0	COMPRESSION SPRING 4	80
092	216002-8	STEEL BALL 4.8	20
094	159808-0	MOTOR HOUSING COMPLETE	11,460
095	256111-1	PIN 6	100
096	421731-2	SEAL RING	150
097	159806-4	GEAR HOUSING COMPLETE	3,880
100	941152-7	FLAT WASHER 6	50
101	941152-7	FLAT WASHER 6	50
A01	781012-9	WRENCH 23	270
A02	798029-5	BULL POINT 30-410	2,770
A06	181118-7	OIL SUPPLY 100CC	320

SERVICE DRAWING

MODEL NO. HM1305

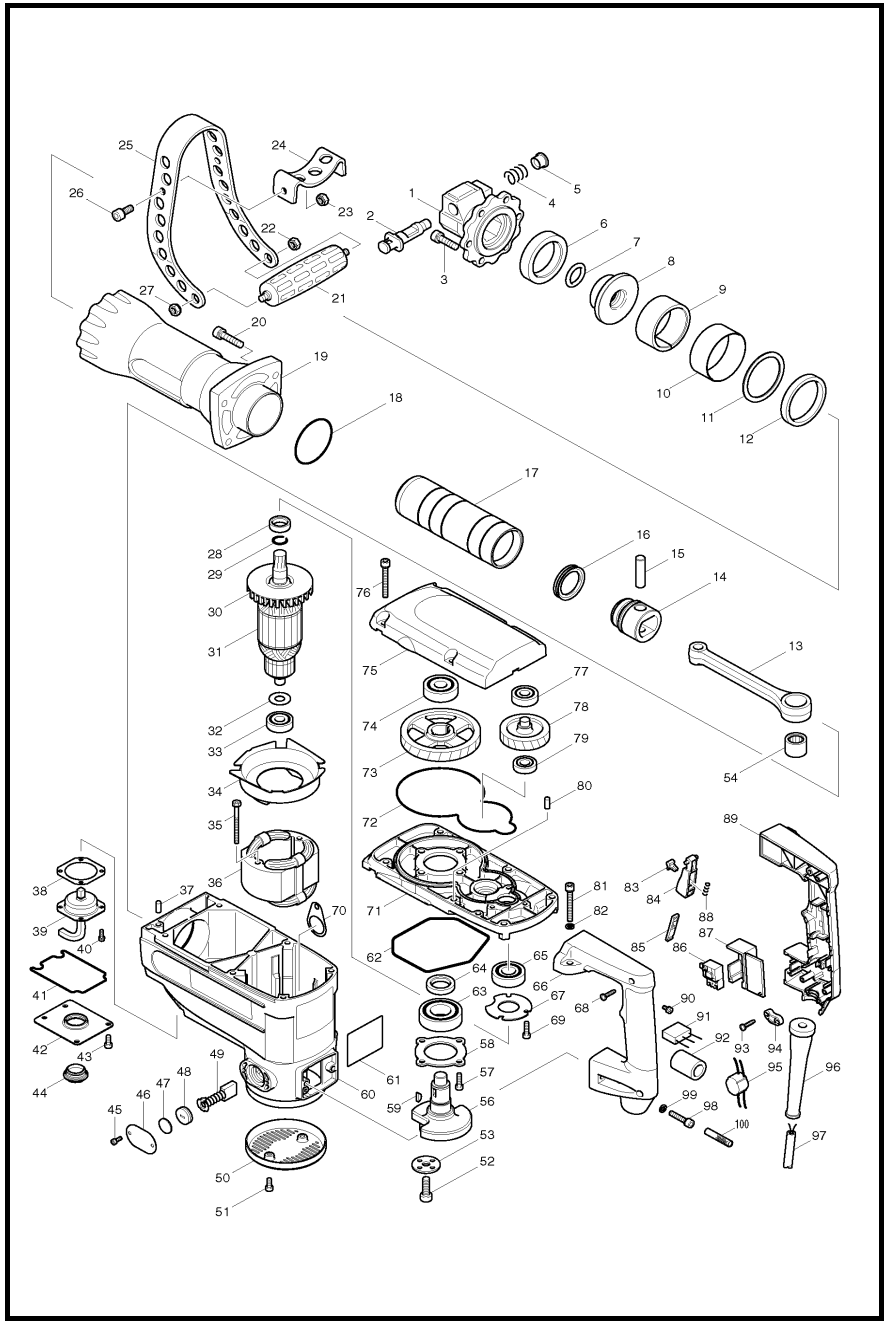

MODEL HM1305

ITEM	PARTS ID	DESCRIPTION	PRICE/BAHT
001	324490-6	TOOL HOLDER	2,290
002	324942-7	TOOL RETAINER	310
003	266010-9	HEX. SOCKET HEAD BOLT M8X30	120
004	233309-7	COMPRESSION SPRING 17	170
005	324135-6	RETAINER SLEEVE	370
006	262111-1	URETHAN RING 48	920
007	213388-1	O RING 24	230
008	324491-4	SEAL HOLDER	580
009	324492-2	IDLER	1,830
010	262557-1	RUBBER SLEEVE 66	170
011	267287-9	FLAT WASHER 57	130
012	262112-9	URETHAN RING 58	580
013	324494-8	CONNECTING ROD	900
014	317828-2	PISTON	480
015	268119-3	PIN 12	160
016	213575-2	Y RING 45	270
017	324493-0	HAMMER	4,780
018	213668-5	O RING 60	100
019	317829-0	BARREL	8,210
020	266011-7	HEX. SOCKET HEAD BOLT M8X35	150
021	273518-6	GRIP 37	690
022	252005-8	HEX. NUT M8-13	130
023	252005-8	HEX. NUT M8-13	130
024	345474-1	HANDLE CLAMP	170
025	345473-3	SIDE HANDLE	610
026	922431-2	HEX. SOCKET HEAD BOLT M8X20	260
027	252005-8	HEX. NUT M8-13	130
028	257260-7	RING 17	250
029	233933-6	RING SPRING 15	100
031	516973-2	ARMATURE ASS'Y 220V	
032	267024-1	FLAT WASHER 12	90
033	211106-1	BALL BEARING 6201LLB	400
034	418790-5	BAFFLE PLATE	170
035	265345-5	+ HEX. BOLT M5X60	130
036	526143-5	FIELD ASS'Y 220V	
037	256111-1	PIN 6	100
038	442139-7	HOLDER SEAL	80
039	154438-2	FELT COMPLETE	270
040	911116-5	PAN HEAD SCREW M4X12	20
041	421888-9	SEAL RING C	80
042	154639-2	OIL TANK COVER COMPLETE	210
043	265903-7	HEX. SOCKET HEAD BOLT M5X12	80
044	242502-2	OIL GAUGE	550
045	266167-6	HEX. SOCKET HEAD BOLT M4X10	80
046	344975-6	HOLDER CAP PLATE	120
047	421034-4	CAP RUBBER	80
048	643700-5	BRUSH HOLDER CAP 7-18	110
049	B-80357	CARBON BRUSH SET CB-204A	
050	284067-8	REAR COVER	360
051	265903-7	HEX. SOCKET HEAD BOLT M5X12	80
052	265386-1	HEX. SOCKET HEAD BOLT M8X25	100
053	267288-7	FLAT WASHER 9	60
054	212263-8	NEEDLE ROLLER BEARING 1820	700

ITEM	PARTS ID	DESCRIPTION	PRICE/BAHT
056	154582-5	CRANK SHAFT COMPLETE	1,690
057	265853-6	HEX. SOCKET HEAD BOLT M5X18	80
058	285716-0	BEARING RETAINER 64	110
059	254001-2	WOODRUFF KEY 4	80
060	183940-8	MOTOR HOUSING SET	9,590
062	421886-3	SEAL RING A	120
063	211373-8	BALL BEARING 6205LLU	620
064	257259-2	RING 23	270
065	211281-3	BALL BEARING 6203LLU	520
066	183923-8	HANDLE SET	1,080
067	285717-8	BEARING RETAINER 48	90
068	265995-6	TAPPING SCREW 4X18	40
069	265853-6	HEX. SOCKET HEAD BOLT M5X18	80
070	681018-6	PAPER WASHER	80
071	317831-3	GEAR HOUSING	3,030
072	421887-1	SEAL RING B	120
073	226594-9	HELICAL GEAR 73	1,670
074	211211-4	BALL BEARING 6302LLB	600
075	317832-1	GEAR HOUSING COVER	2,140
076	266304-2	HEX. SOCKET HEAD BOLT M6X50	130
077	211107-9	BALL BEARING 6201ZZ	410
078	158139-4	HELICAL GEAR 43 COMPLETE	2,600
079	211101-1	BALL BEARING 6001LLB	450
080	256111-1	PIN 6	100
081	266304-2	HEX. SOCKET HEAD BOLT M6X50	130
082	941152-7	FLAT WASHER 6	50
083	415805-9	LOCK BUTTON	100
085	415806-7	LOCK PLATE	120
086	651922-3	SWITCH TG71B	850
087	421778-6	SWITCH BOX	230
088	231457-6	COMPRESSION SPRING 3	50
089	183923-8	HANDLE SET	1,080
090	652014-1	PAN HEAD SCREW M4X8	30
093	265995-6	TAPPING SCREW 4X18	40
094	687053-2	STRAIN RELIEF	70
096	682560-0	CORD GUARD 10	170
097	691157-4	POWER SUPPLY CORD 0.75-3-5.0	1,530
098	266158-7	HEX. SOCKET HEAD BOLT M6X30	90
099	941152-7	FLAT WASHER 6	50
100	683607-3	VARNISHED POLYESTER TUBE 8-40	50
101	819084-5	MAKITA LABEL	110
102	213218-6	O RING 16	20
A01	181118-7	OIL SUPPLY 100CC	320
A02	781012-9	WRENCH 23	270
A03	798029-5	BULL POINT 30-410	2,770

SERVICE DRAWING

MODEL NO. HM1306

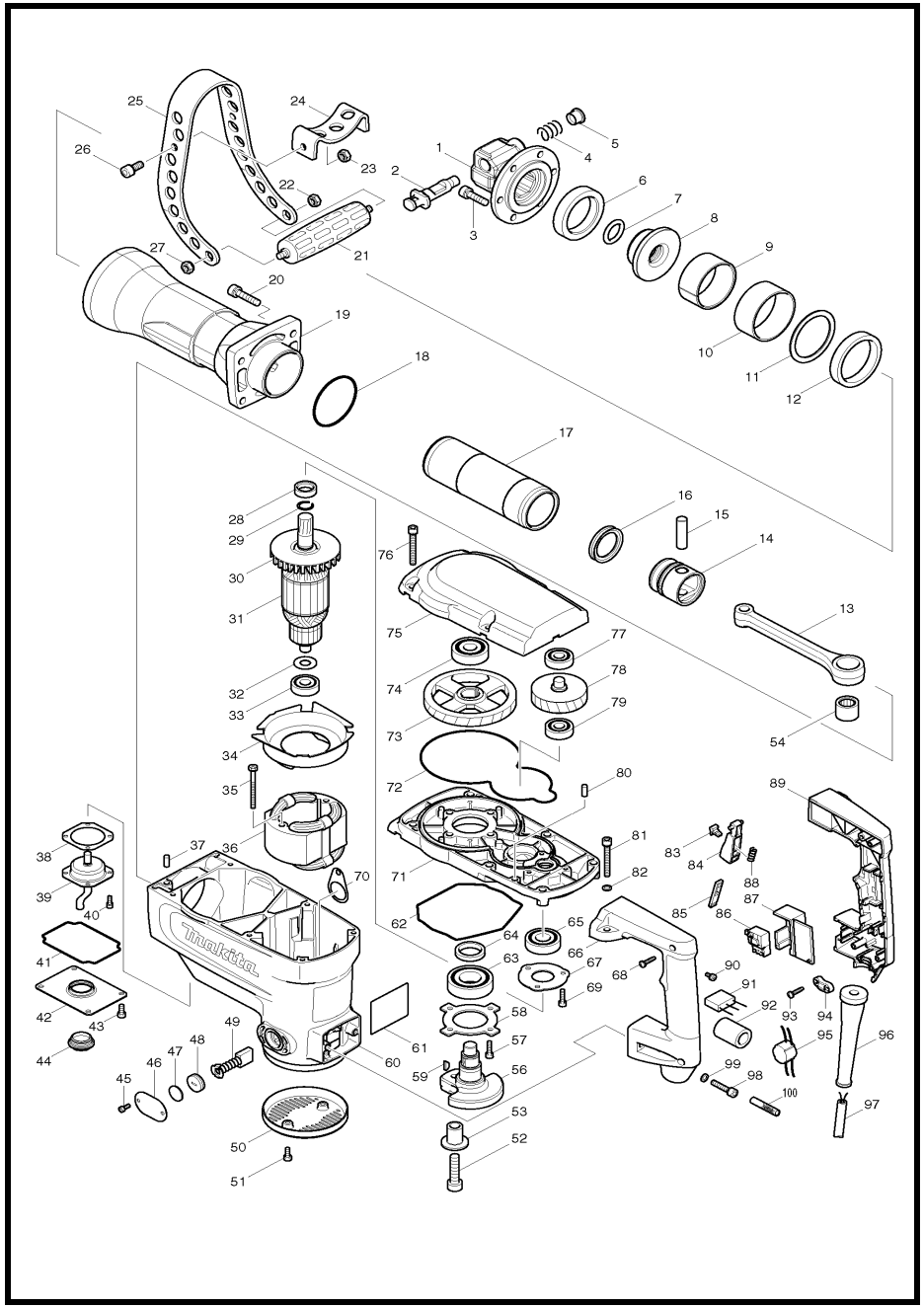

MODEL HM1306

ITEM	PARTS ID	DESCRIPTION	PRICE/BAHT
001	324820-1	TOOL HOLDER	2,410
002	324942-7	TOOL RETAINER	310
003	266010-9	HEX. SOCKET HEAD BOLT M8X30	120
004	233309-7	COMPRESSION SPRING 17	170
005	324135-6	RETAINER SLEEVE	370
006	262137-3	URETHANE RING 49	470
007	213388-1	O RING 24	230
008	324821-9	SEAL HOLDER	760
009	324824-3	IDLER	1,920
010	262536-9	RUBBER SLEEVE 64	230
011	267146-7	FLAT WASHER 58	320
012	262068-6	URETHANE RING 59	560
013	324832-4	CONNECTING ROD	1,040
014	318193-2	PISTON	620
015	256238-7	PIN 12	230
016	213494-2	Y RING 34	230
017	324822-7	HAMMER	5,420
018	213701-3	O RING 65	100
019	318190-8	BARREL	10,010
020	266011-7	HEX. SOCKET HEAD BOLT M8X35	150
021	273518-6	GRIP 37	690
022	252005-8	HEX. NUT M8-13	130
023	252005-8	HEX. NUT M8-13	130
024	345474-1	HANDLE CLAMP	170
025	345473-3	SIDE HANDLE	610
026	922431-2	HEX. SOCKET HEAD BOLT M8X20	260
027	252005-8	HEX. NUT M8-13	130
028	257260-7	RING 17	250
029	233933-6	RING SPRING 15	100
031	517773-3	ARMATURE ASS'Y 220V	
032	267024-1	FLAT WASHER 12	90
033	211106-1	BALL BEARING 6201LLB	400
034	418790-5	BAFFLE PLATE	170
035	265345-5	+ HEX. BOLT M5X60	130
036	526143-5	FIELD ASS'Y 220V	
037	256111-1	PIN 6	100
038	442139-7	HOLDER SEAL	80
039	158388-3	FELT COMPLETE	680
040	922116-0	HEX. SOCKET HEAD BOLT M4X12	50
041	424053-9	SEAL RING C	80
042	158538-0	OIL TANK COVER COMPLETE	230
043	265903-7	HEX. SOCKET HEAD BOLT M5X12	80
044	242502-2	OIL GAUGE	550
045	266167-6	HEX. SOCKET HEAD BOLT M4X10	80
046	344975-6	HOLDER CAP PLATE	120
047	421034-4	CAP RUBBER	80
048	643700-5	BRUSH HOLDER CAP 7-18	110
049	B-80357	CARBON BRUSH SET CB-204A	
050	284067-8	REAR COVER	360
051	265903-7	HEX. SOCKET HEAD BOLT M5X12	80
052	266276-1	HEX.SOCKET HEAD BOLT M10X40	120
053	331792-3	CRANK SLEEVE	390
054	212263-8	NEEDLE ROLLER BEARING 1820	700

ITEM	PARTS ID	DESCRIPTION	PRICE/BAHT
056	324823-5	CRANK SHAFT	1,200
057	265853-6	HEX. SOCKET HEAD BOLT M5X18	80
058	285730-6	BEARING RETAINER 65	130
059	254001-2	WOODRUFF KEY 4	80
060	158386-7	MOTOR HOUSING COMPLETE	10,480
062	424048-2	SEAL RING A	150
063	211373-8	BALL BEARING 6205LLU	620
064	257286-9	RING 25	290
065	211281-3	BALL BEARING 6203LLU	520
066	188387-1	HANDLE SET	990
067	285729-1	BEARING RETAINER 48	80
068	265995-6	TAPPING SCREW 4X18	40
069	265853-6	HEX. SOCKET HEAD BOLT M5X18	80
070	681018-6	PAPER WASHER	80
071	318191-6	GEAR HOUSING	3,400
072	424049-0	SEAL RING B	150
073	226671-7	HELICAL GEAR 65	2,000
074	211211-4	BALL BEARING 6302LLB	600
075	318192-4	GEAR HOUSING COVER	2,320
076	266304-2	HEX. SOCKET HEAD BOLT M6X50	130
077	211107-9	BALL BEARING 6201ZZ	410
078	158387-5	HELICAL GEAR 37 COMPLETE	2,910
079	211107-9	BALL BEARING 6201ZZ	410
080	256111-1	PIN 6	100
081	266304-2	HEX. SOCKET HEAD BOLT M6X50	130
082	941152-7	FLAT WASHER 6	50
083	415805-9	LOCK BUTTON	100
084	417544-7	SWITCH LEVER	230
085	415806-7	LOCK PLATE	120
086	650677-7	SWITCH C3PA-1112	670
087	421778-6	SWITCH BOX	230
088	231457-6	COMPRESSION SPRING 3	50
089	188387-1	HANDLE SET	990
090	652014-1	PAN HEAD SCREW M4X8	30
093	265995-6	TAPPING SCREW 4X18	40
094	687053-2	STRAIN RELIEF	70
096	682560-0	CORD GUARD 10	170
097	691157-4	POWER SUPPLY CORD 0.75-3-5.0	1,530
098	266158-7	HEX. SOCKET HEAD BOLT M6X30	90
099	941152-7	FLAT WASHER 6	50
100	683607-3	VARNISHED POLYESTER TUBE 8-40	50
101	213218-6	O RING 16	20
A01	181118-7	OIL SUPPLY 100CC	320
A02	781012-9	WRENCH 23	270
A03	798029-5	BULL POINT 30-410	2,770

SERVICE DRAWING

MODEL NO. HM1307C/HM1317C

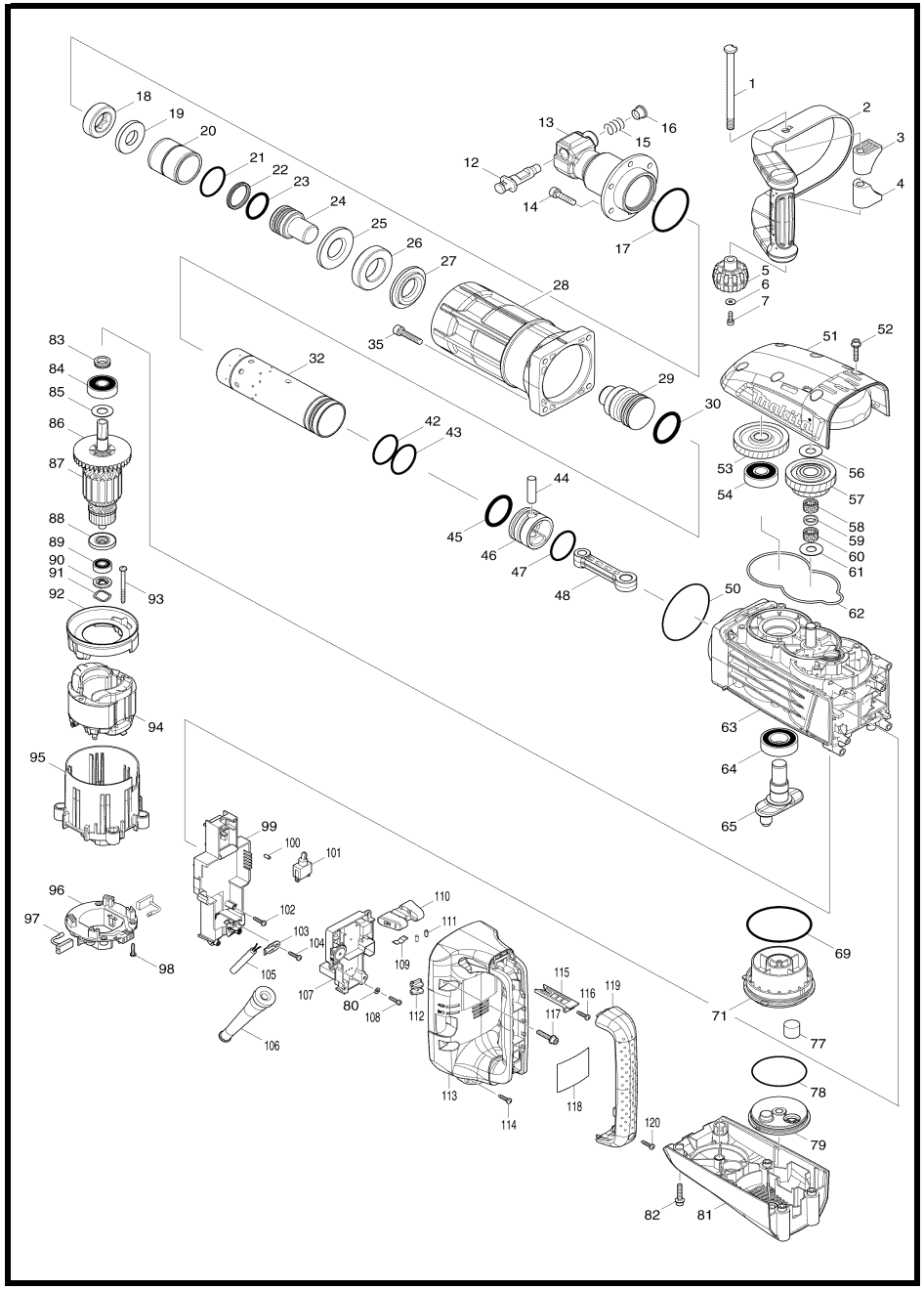

MODEL HM1307C/HM1317C

ITEM	PARTS ID	DESCRIPTION	PRICE/BAHT	ITEM	PARTS ID	DESCRIPTION	PRICE/BAHT
001	266512-5	SET BOLT M10X142	390	059	262157-7	NYLON RING 14	130
002	163506-0	SIDE HANDLE	1,490	060	212159-3	NEEDLE CAGE 1412	310
003	451331-4	HANDLE BASE	150	061	267166-1	FLAT WASHER 14	130
004	451331-4	HANDLE BASE	150	062	424207-8	SEAL RING	130
005	252654-1	THUMB NUT M10	290	063	140060-1	CRANK HOUSING COMPLETE (HM1317	13,930
006	253194-2	FLAT WASHER 5	80	063	140056-2	CRANK HOUSING COMPLETE (HM1317	13,430
007	922221-3	HEX. SOCKET HEAD BOLT M5X16	60	064	211373-8	BALL BEARING 6205LLU	620
012	324099-4	TOOL RETAINER	1,810	065	331871-7	CRANK SHAFT	850
013	331866-0	TOOL HOLDER	11,940	066	331869-4	COUNTER SHAFT (HM1317C)	3,380
014	266011-7	HEX. SOCKET HEAD BOLT M8X35	150	067	212264-6	NEEDLE ROLLER BEARING 1813 (HM1317C	800
015	233309-7	COMPRESSION SPRING 17	170	068	325686-2	SHOULDER WASHER 8 (HM1317C)	190
016	324135-6	RETAINER SLEEVE	370	069	213809-3	O RING 87	210
017	213720-9	O RING 67	90	070	268240-8	PIN 10 (HM1317C)	150
018	262150-1	URETHAN RING	390	071	451170-2	CRANK CAP (HM1317C)	500
019	267401-7	FLAT WASHER 24	570	071	140057-0	BEARING BOX COMPLETE (HM1317C)	1,550
020	257782-7	SLEEVE 43	1,020	072	961004-6	RETAINING RING S-8 (HM1317C)	20
021	213569-7	O RING 45	80	073	213261-5	O RING 17 (HM1317C)	40
022	213192-8	X-RING 36	360	074	265844-7	HEX. SOCKET HEAD BOLT M6X20 (HM1317C)	80
023	213150-4	O-RING 36	160	075	211032-4	BALL BEARING 608ZZ (HM1317C)	200
024	325682-0	IMPACT BOLT	1,610	076	962112-6	RETAINING RING R-22 (HM1317C)	80
025	325683-8	WASHER 30	690	077	443127-7	FILTER	80
026	424206-0	RUBBER RING 36	680	078	213758-4	O RING 74	210
027	325684-6	SHOULDER RING 32	810	079	451166-3	CRANK CAP COVER	250
028	318458-2	BARREL	3,880	080	346546-5	PLATE	70
029	325685-4	STRIKER	910	081	451171-0	REAR COVER	830
030	213193-6	O-RING 42	200	082	266499-1	H.S HEAD BOLT M6X30 WITH GM	110
031	233977-6	RING SPRING 55 (HM1317C)	130	083	331855-5	SEALING SCREW	130
032	331870-9	CYLINDER 52	7,410	084	211249-9	BALL BEARING 6302LLU	620
033	451168-9	SHOULDER SLEEVE (HM1317C)	230	085	267397-2	FLAT WASHER 15	110
034	234111-1	COMPRESSION SPRING 66 (HM1317C)	670	087	517788-0	ARMATURE ASSEMBLY 220-240V	
035	265367-5	HEX. SOCKET HEAD BOLT M8X40	150	088	681642-5	INSULATION WASHER	570
036	451169-7	WEIGHT GUIDE (HM1317C)	160	089	210059-1	BALL BEARING 6000DDW	300
037	331867-8	COUNTER WEIGHT (HM1317C)	830	090	451107-9	WASHER GUIDE	150
038	451169-7	WEIGHT GUIDE (HM1317C)	160	091	267809-5	WAVE WASHER 19	50
039	234111-1	COMPRESSION SPRING 66 (HM1317C)	670	092	451111-8	BAFFLE PLATE	230
040	331868-6	SLIDE SLEEVE (HM1317C)	680	093	266044-2	TAPPING SCREW 5X60	130
041	233977-6	RING SPRING 55 (HM1317C)	130	094	636333-3	FIELD 220-240V	
042	213569-7	O RING 45	80	095	451117-6	MOTOR HOUSING	910
043	213569-7	O RING 45	80	096	638447-4	BRUSH HOLDER UNIT	560
044	256238-7	PIN 12	230	098	265995-6	TAPPING SCREW 4X18	40
045	213193-6	O-RING 42	200	099	158986-3	CONTROLLER COVER COMPLETE	660
046	318459-0	PISTON	1,580	100	263027-3	RUBBER PIN 4	50
047	213569-7	O RING 45	80	101	651423-1	SWITCH	710
048	451164-7	CONNECTING ROD	310	102	265995-6	TAPPING SCREW 4X18	40
049	268241-6	PIN 6 (HM1317C)	110	103	687169-3	STRAIN RELIEF	60
050	213806-9	O RING 90	120	104	265995-6	TAPPING SCREW 4X18	40
051	318462-1	GEAR COVER	2,400	105	691025-1	POWER SUPPLY CORD 0.75-2-5.0	1,070
052	266499-1	H.S HEAD BOLT M6X30 WITH GM	110	106	682560-0	CORD GUARD 10	170
053	227709-1	HELICAL GEAR 47	2,060	107	620228-0	CONTROLLER (HM1317C)	3,500
054	211306-3	BALL BEARING 6204LLB	570	107	620230-3	CONTROLLER (HM1317C)	4,240
056	267166-1	FLAT WASHER 14	130	108	266834-3	H.S.H.BOLT M4X18 WITH GM	70
057	226156-3	GEAR COMPLETE 31-43	4,220	109	232209-8	LEAF SPRING	90
058	212159-3	NEEDLE CAGE 1412	310	110	451112-6	SLIDE LEVER	230

SERVICE DRAWING

MODEL NO. HM1307C/HM1317C

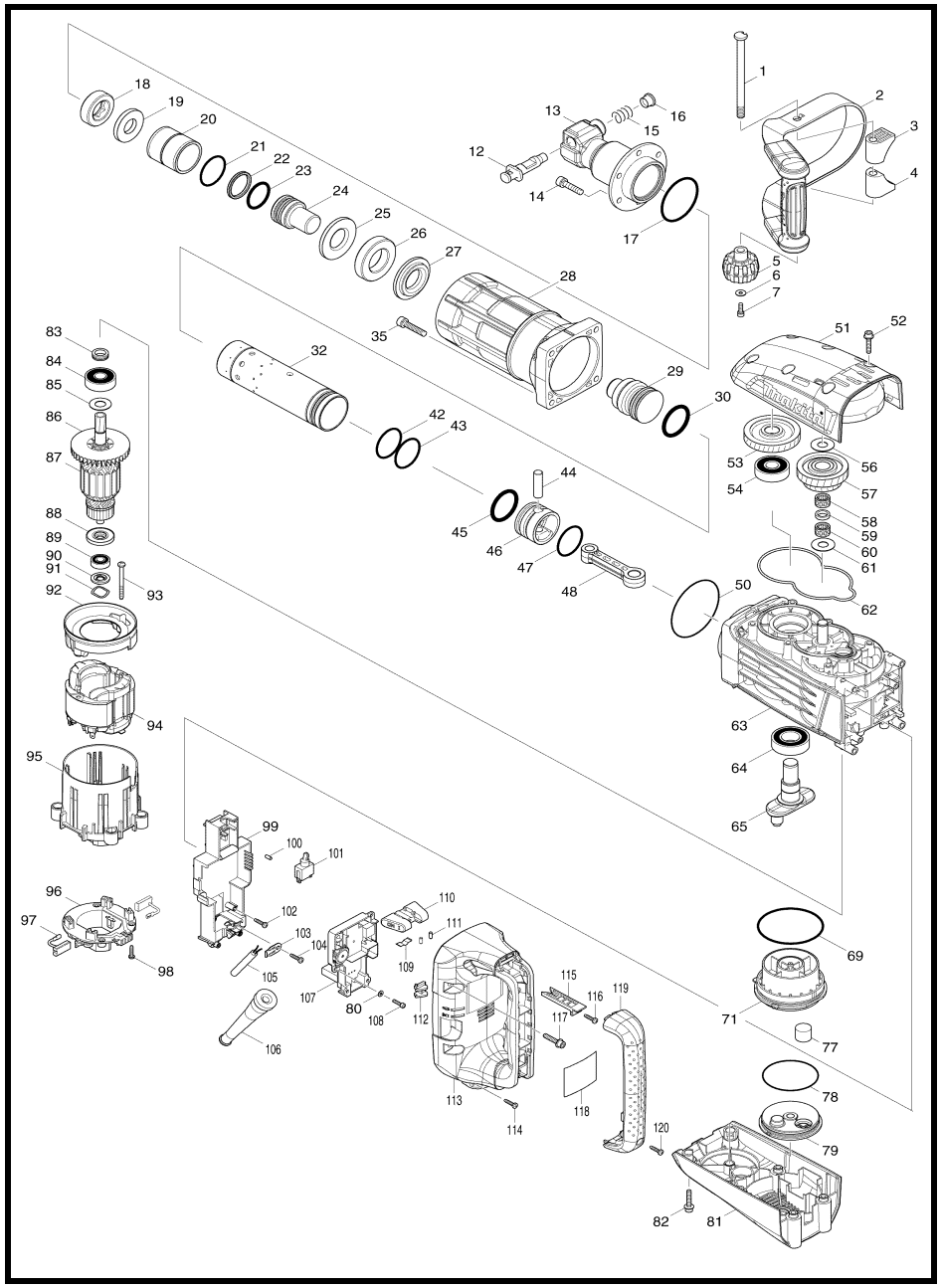

MODEL HM1307C/HM1317C

ITEM	PARTS ID	DESCRIPTION	PRICE/BAHT
111	263027-3	RUBBER PIN 4	50
112	451105-3	LENS	160
113	451118-4	HANDLE	1,790
114	265995-6	TAPPING SCREW 4X18	40
115	451106-1	SWITCH LEVER	180
116	265995-6	TAPPING SCREW 4X18	40
117	266499-1	H.S HEAD BOLT M6X30 WITH GM	110
119	451119-2	HANDLE COVER	910
120	265995-6	TAPPING SCREW 4X18	40
A01	D-15285	BULL POINT 400	1,380

SERVICE DRAWING

MODEL NO. HM1400

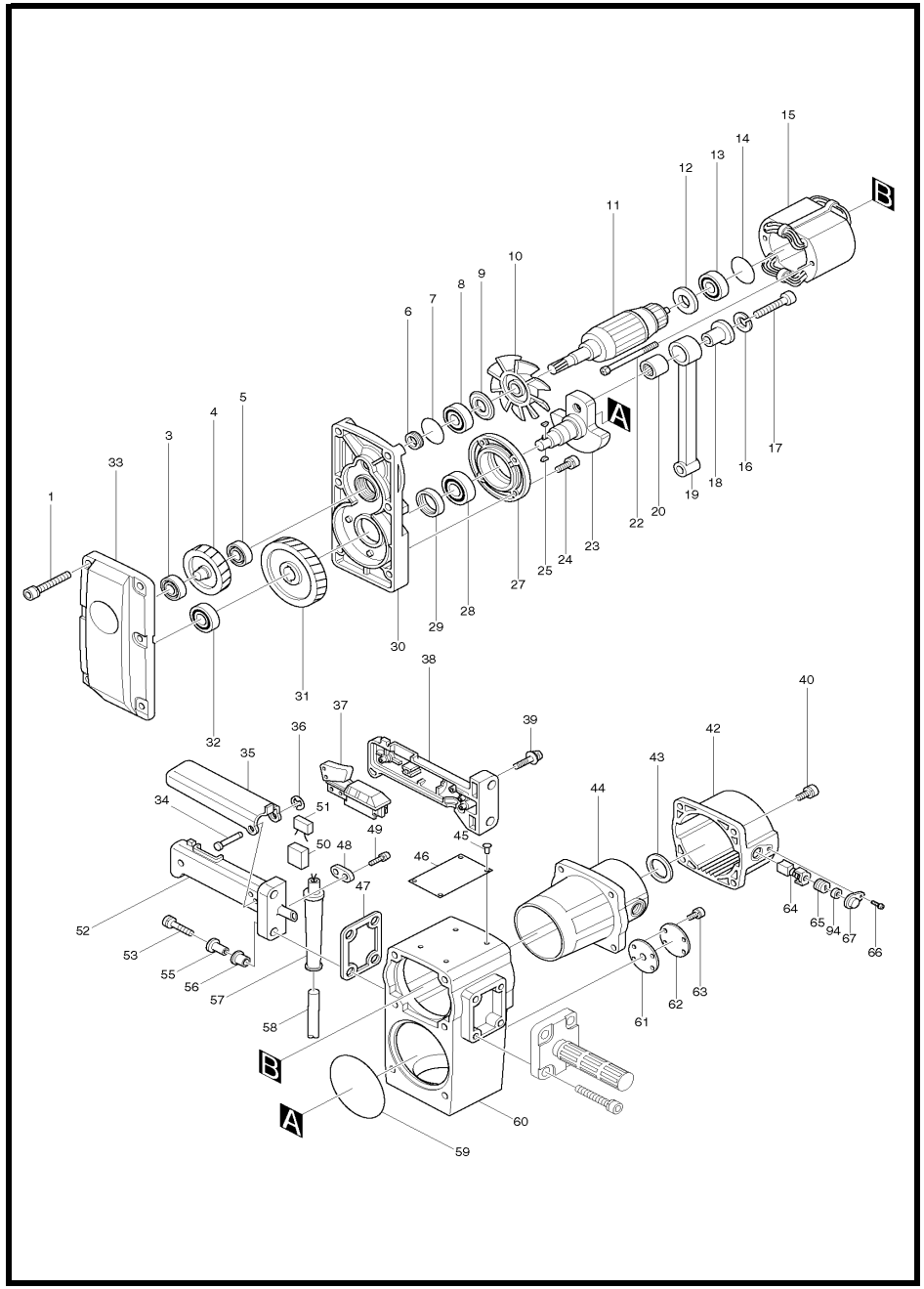

MODEL HM1400

ITEM	PARTS ID	DESCRIPTION	PRICE/BAHT
001	922471-0	HEX. SOCKET HEAD BOLT M8X50	150
003	211109-5	BALL BEARING 6201	270
004	221713-2	HELICAL GEAR 36	2,350
005	211109-5	BALL BEARING 6201	270
006	331212-7	SEAL	230
007	213460-9	O RING 35	50
008	211206-7	BALL BEARING 6202LLB	460
009	213202-1	DUST SEAL 15	120
011	514843-9	ARMATURE ASS'Y 220V	
012	681635-2	INSULATION WASHER	80
013	211066-7	BALL BEARING 6200LLB	410
014	213406-5	O RING 30	30
015	524793-0	FIELD ASS'Y 220V	
016	942301-9	SPRING WASHER 12	50
017	922667-3	HEX. SOCKET HEAD BOLT M12X45	160
018	321560-2	CRANK SLEEVE	810
019	321557-1	CONNECTING ROD	2,680
020	212307-4	NEEDLE BEARING 1820	750
022	265343-9	+ HEX. BOLT M5X80	170
023	321556-3	CRANK SHAFT	3,850
024	266009-4	HEX. SOCKET HEAD BOLT M8X18	100
025	254001-2	WOODRUFF KEY 4	80
027	315525-4	BEARING BOX	1,810
028	211359-2	BALL BEARING 6205	570
029	213354-8	OIL SEAL 25	290
030	157648-0	GEAR HOUSING	7,400
031	221714-0	HELICAL GEAR 53	2,640
032	211214-8	BALL BEARING 6302	560
033	315908-8	GEAR HOUSING COVER	4,200
034	323147-6	SWITCH LEVER PIN	250
035	342531-6	SWITCH LEVER	320
036	961011-9	STOP RING E-4	20
037	651131-4	SWITCH C3D-15MS	1,560
038	181906-2	HANDLE SET	1,330
039	911253-5	PAN HEAD SCREW M5X30	50
040	922356-0	HEX. SOCKET HEAD BOLT M6X35	80
042	316385-7	REAR CASE	2,760
043	253751-6	FLAT WASHER 24	80
044	159420-6	MOTOR HOUSING	3,850
045	953106-2	RIVET 0-5	20
046	855573-6	NAME PLATE HM1400	
047	423137-0	PACKING	230
048	687000-3	STRAIN RELIEF	40
049	911133-5	PAN HEAD SCREW M4X18	50
050	685725-3	SPONGE SHEET	40
052	181906-2	HANDLE SET	1,330
053	922461-3	HEX. SOCKET HEAD BOLT M8X40	130
055	321956-7	HANDLE SLEEVE	100
056	421308-3	SLEEVE	100
057	682505-8	CORD GUARD 10-90	150
058	691227-9	POWER SUPPLY CORD 1.25-2-5.0	1,290
059	213855-6	O RING 95	150
060	157649-8	CRANK HOUSING	16,880

ITEM	PARTS ID	DESCRIPTION	PRICE/BAHT
061	442009-0	PACKING 50	80
062	341397-1	PLATE 50	120
063	911211-1	PAN HEAD SCREW M5X12	30
064	B-80335	CARBON BRUSH SET CB-155A	
065	643650-4	BRUSH HOLDER CAP 6.5-13.5	70
066	911216-1	PAN HEAD SCREW M5X14	30
067	343891-9	HOLDER CAP PLATE	150
068	213755-0	O RING 75	120
069	315524-6	CYLINDER	9,200
071	922461-3	HEX. SOCKET HEAD BOLT M8X40	130
072	262034-3	NYLON RING 63	290
073	253861-9	FLAT WASHER 63	290
074	331299-9	IDLER	2,140
075	322208-9	RING HOLDER	1,240
076	321563-6	IMPACT BOLT	2,460
077	262039-3	NYLON RING 42	320
078	213517-6	X RING 40	1,380
079	213504-5	O RING 40	80
080	213754-2	O RING 71	100
082	266010-9	HEX. SOCKET HEAD BOLT M8X30	120
083	321961-4	TOOL HOLDER	12,190
084	321788-2	TOOL RETAINER	2,110
085	231032-8	COMPRESSION SPRING 5	80
086	216004-4	STEEL BALL 7.9	50
087	322059-0	HAMMER	8,310
088	412055-7	PISTON RING 50	1,130
089	341993-5	INNER RING	290
090	412055-7	PISTON RING 50	1,130
091	341993-5	INNER RING	290
092	321562-8	PISTON	2,060
093	256128-4	PIN 10	230
094	262003-4	RUBBER RING 6	80
400	273423-7	GRIP 40	2,840
402	922451-6	HEX. SOCKET HEAD BOLT M8X30	90
404	783204-6	HEX. WRENCH 6	110
405	798029-5	BULL POINT 30-410	2,770

SERVICE DRAWING

MODEL NO. HM1400

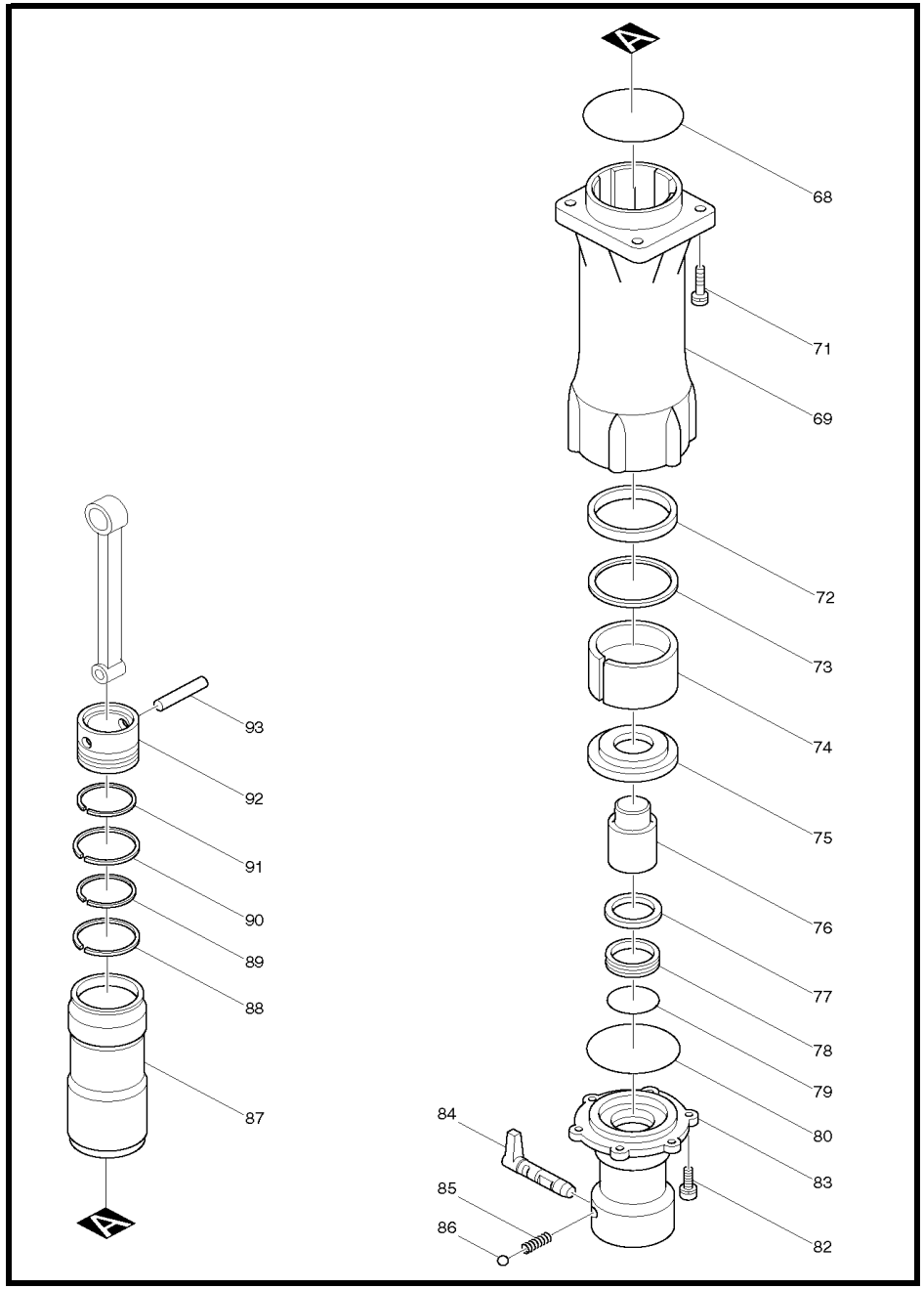

MODEL HM1400

ITEM	PARTS ID	DESCRIPTION	PRICE/BAHT
001	922471-0	HEX. SOCKET HEAD BOLT M8X50	150
003	211109-5	BALL BEARING 6201	270
004	221713-2	HELICAL GEAR 36	2,350
005	211109-5	BALL BEARING 6201	270
006	331212-7	SEAL	230
007	213460-9	O RING 35	50
008	211206-7	BALL BEARING 6202LLB	460
009	213202-1	DUST SEAL 15	120
011	514843-9	ARMATURE ASS'Y 220V	
012	681635-2	INSULATION WASHER	80
013	211066-7	BALL BEARING 6200LLB	410
014	213406-5	O RING 30	30
015	524793-0	FIELD ASS'Y 220V	
016	942301-9	SPRING WASHER 12	50
017	922667-3	HEX. SOCKET HEAD BOLT M12X45	160
018	321560-2	CRANK SLEEVE	810
019	321557-1	CONNECTING ROD	2,680
020	212307-4	NEEDLE BEARING 1820	750
022	265343-9	+ HEX. BOLT M5X80	170
023	321556-3	CRANK SHAFT	3,850
024	266009-4	HEX. SOCKET HEAD BOLT M8X18	100
025	254001-2	WOODRUFF KEY 4	80
027	315525-4	BEARING BOX	1,810
028	211359-2	BALL BEARING 6205	570
029	213354-8	OIL SEAL 25	290
030	157648-0	GEAR HOUSING	7,400
031	221714-0	HELICAL GEAR 53	2,640
032	211214-8	BALL BEARING 6302	560
033	315908-8	GEAR HOUSING COVER	4,200
034	323147-6	SWITCH LEVER PIN	250
035	342531-6	SWITCH LEVER	320
036	961011-9	STOP RING E-4	20
037	651131-4	SWITCH C3D-15MS	1,560
038	181906-2	HANDLE SET	1,330
039	911253-5	PAN HEAD SCREW M5X30	50
040	922356-0	HEX. SOCKET HEAD BOLT M6X35	80
042	316385-7	REAR CASE	2,760
043	253751-6	FLAT WASHER 24	80
044	159420-6	MOTOR HOUSING	3,850
045	953106-2	RIVET 0-5	20
046	855573-6	NAME PLATE HM1400	
047	423137-0	PACKING	230
048	687000-3	STRAIN RELIEF	40
049	911133-5	PAN HEAD SCREW M4X18	50
050	685725-3	SPONGE SHEET	40
052	181906-2	HANDLE SET	1,330
053	922461-3	HEX. SOCKET HEAD BOLT M8X40	130
055	321956-7	HANDLE SLEEVE	100
056	421308-3	SLEEVE	100
057	682505-8	CORD GUARD 10-90	150
058	691227-9	POWER SUPPLY CORD 1.25-2-5.0	1,290
059	213855-6	O RING 95	150
060	157649-8	CRANK HOUSING	16,880
061	442009-0	PACKING 50	80
062	341397-1	PLATE 50	120
063	911211-1	PAN HEAD SCREW M5X12	30
064	B-80335	CARBON BRUSH SET CB-155A	
065	643650-4	BRUSH HOLDER CAP 6.5-13.5	70
066	911216-1	PAN HEAD SCREW M5X14	30
067	343891-9	HOLDER CAP PLATE	150
068	213755-0	O RING 75	120
069	315524-6	CYLINDER	9,200
071	922461-3	HEX. SOCKET HEAD BOLT M8X40	130
072	262034-3	NYLON RING 63	290
073	253861-9	FLAT WASHER 63	290
074	331299-9	IDLER	2,140
075	322208-9	RING HOLDER	1,240
076	321563-6	IMPACT BOLT	2,460
077	262039-3	NYLON RING 42	320
078	213517-6	X RING 40	1,380
079	213504-5	O RING 40	80
080	213754-2	O RING 71	100
082	266010-9	HEX. SOCKET HEAD BOLT M8X30	120
083	321961-4	TOOL HOLDER	12,190
084	321788-2	TOOL RETAINER	2,110
085	231032-8	COMPRESSION SPRING 5	80
086	216004-4	STEEL BALL 7.9	50
087	322059-0	HAMMER	8,310
088	412055-7	PISTON RING 50	1,130
089	341993-5	INNER RING	290
090	412055-7	PISTON RING 50	1,130
091	341993-5	INNER RING	290
092	321562-8	PISTON	2,060
093	256128-4	PIN 10	230
094	262003-4	RUBBER RING 6	80
400	273423-7	GRIP 40	2,840
402	922451-6	HEX. SOCKET HEAD BOLT M8X30	90
404	783204-6	HEX. WRENCH 6	110
405	798029-5	BULL POINT 30-410	2,770

SERVICE DRAWING

MODEL NO. HM1500

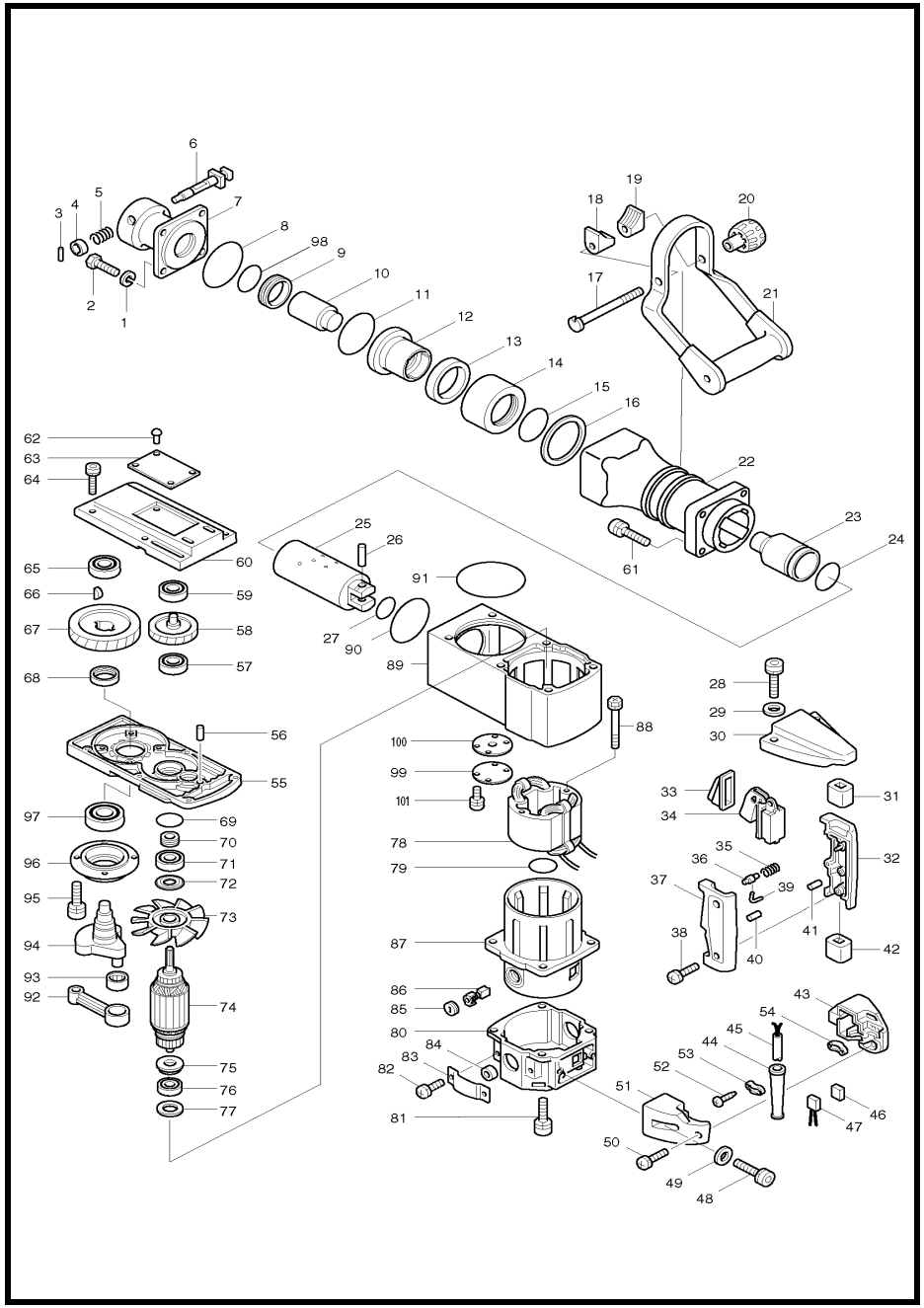

MODEL HM1500

ITEM	PARTS ID	DESCRIPTION	PRICE/BAHT
001	253989-3	SPRING WASHER 12	100
002	265997-2	HEX. SOCKET HEAD BOLT M12X40	160
003	256219-1	PIN 4	60
004	322699-4	RETAINER RING	400
005	231281-7	COMPRESSION SPRING 15	50
006	322567-1	TOOL RETAINER	1,500
007	322692-8	TOOL HOLDER	8,540
008	213755-0	O RING 75	120
009	213517-6	X RING 40	1,380
010	322693-6	IMPACT BOLT	1,820
011	213717-8	O RING 63	100
012	322931-6	IMPACT BOLT HOLDER	3,420
013	262050-5	RUBBER RING 54	320
014	322930-8	CYLINDER B	3,080
015	213660-1	O RING 53	100
016	261084-5	RUBBER WASHER 63	210
017	265956-6	SET BOLT M10X120	470
018	414819-5	HANDLE BASE	160
019	414819-5	HANDLE BASE	160
020	252633-9	WING NUT M10	390
021	421386-3	SIDE HANDLE	3,550
022	318558-8	BARREL	11,950
023	322383-1	STRIKER	3,070
024	213564-7	O RING 45	390
025	322387-3	PISTON CYLINDER	8,680
026	256209-4	PIN 10	160
027	213473-0	O RING 33	80
028	922376-4	HEX. SOCKET HEAD BOLT M6X55	120
029	941152-7	FLAT WASHER 6	50
030	414646-0	UPPER HANDLE	850
031	421373-2	RUBBER	170
032	182429-3	HANDLE SET	870
033	421265-5	DUST COVER	190
034	651145-3	SWITCH C3D-H-MS	1,730
035	231298-0	COMPRESSION SPRING 6	50
036	414885-2	LOCK BUTTON	150
037	182429-3	HANDLE SET	870
038	911248-8	PAN HEAD SCREW M5X28	50
039	322464-1	LOCK PIN	160
040	263002-9	RUBBER PIN 4	30
041	263002-9	RUBBER PIN 4	30
042	421373-2	RUBBER	170
043	182405-7	LOWER HANDLE SET	870
044	682568-4	CORD GUARD 10	170
045	691227-9	POWER SUPPLY CORD 1.25-2-5.0	1,290
048	922356-0	HEX. SOCKET HEAD BOLT M6X35	80
049	941152-7	FLAT WASHER 6	50
050	911248-8	PAN HEAD SCREW M5X28	50
051	182405-7	LOWER HANDLE SET	870
052	265995-6	TAPPING SCREW 4X18	40
053	687053-2	STRAIN RELIEF	70
054	687051-6	STRAIN RELIEF	80
055	159189-2	GEAR HOUSING COMPLETE	3,520
056	256111-1	PIN 6	100
057	211109-5	BALL BEARING 6201	270
058	221781-5	HELICAL GEAR 37	2,770
059	211109-5	BALL BEARING 6201	270
060	316995-0	GEAR HOUSING COVER	2,790
061	265367-5	HEX. SOCKET HEAD BOLT M8X40	150
062	953106-2	RIVET 0-5	20
064	922376-4	HEX. SOCKET HEAD BOLT M6X55	120
065	211214-8	BALL BEARING 6302	560
066	254001-2	WOODRUFF KEY 4	80
067	221782-3	HELICAL GEAR 55	3,160
068	213354-8	OIL SEAL 25	290
069	213460-9	O RING 35	50
070	331367-8	SEALING SCREW	230
071	211206-7	BALL BEARING 6202LLB	460
072	213202-1	DUST SEAL 15	120
074	514958-2	ARMATURE ASS'Y 220V	
075	681635-2	INSULATION WASHER	80
076	211066-7	BALL BEARING 6200LLB	410
077	253794-8	FLAT WASHER 18	80
078	624903-0	FIELD 220V	
079	213406-5	O RING 30	30
080	316268-1	REAR CASE	3,250
081	922356-0	HEX. SOCKET HEAD BOLT M6X35	80
082	911211-1	PAN HEAD SCREW M5X12	30
083	343748-4	HOLDER CAP PLATE	160
084	262044-0	RUBBER RING 12	100
085	643700-5	BRUSH HOLDER CAP 7-18	110
086	B-80357	CARBON BRUSH SET CB-204A	
087	159631-3	MOTOR HOUSING COMPLETE	3,490
088	265341-3	+ HEX. BOLT M5X75	150
089	316498-4	CRANK HOUSING	12,340
090	213755-0	O RING 75	120
091	213806-9	O RING 90	120
092	322381-5	CONNECTING ROD	1,660
093	212309-0	NEEDLE BEARING 2016	640
094	152373-8	CRANK SHAFT COMPLETE	2,910
095	265366-7	HEX. SOCKET HEAD BOLT M6X22	100
096	316267-3	BEARING BOX	1,010
097	211359-2	BALL BEARING 6205	570
098	213504-5	O RING 40	80
099	341397-1	PLATE 50	120
100	442009-0	PACKING 50	80
101	911211-1	PAN HEAD SCREW M5X12	30
102	257182-1	RING 12	230
103	261105-3	NYLON WASHER 42	190
A01	783203-8	HEX. WRENCH 5	100
A02	783204-6	HEX. WRENCH 6	110
A03	783207-0	HEX. WRENCH 10	250
A04	798029-5	BULL POINT 30-410	2,770
E04	181490-7	HAMMER GREASE 30G	230

SERVICE DRAWING

MODEL NO. HM1800

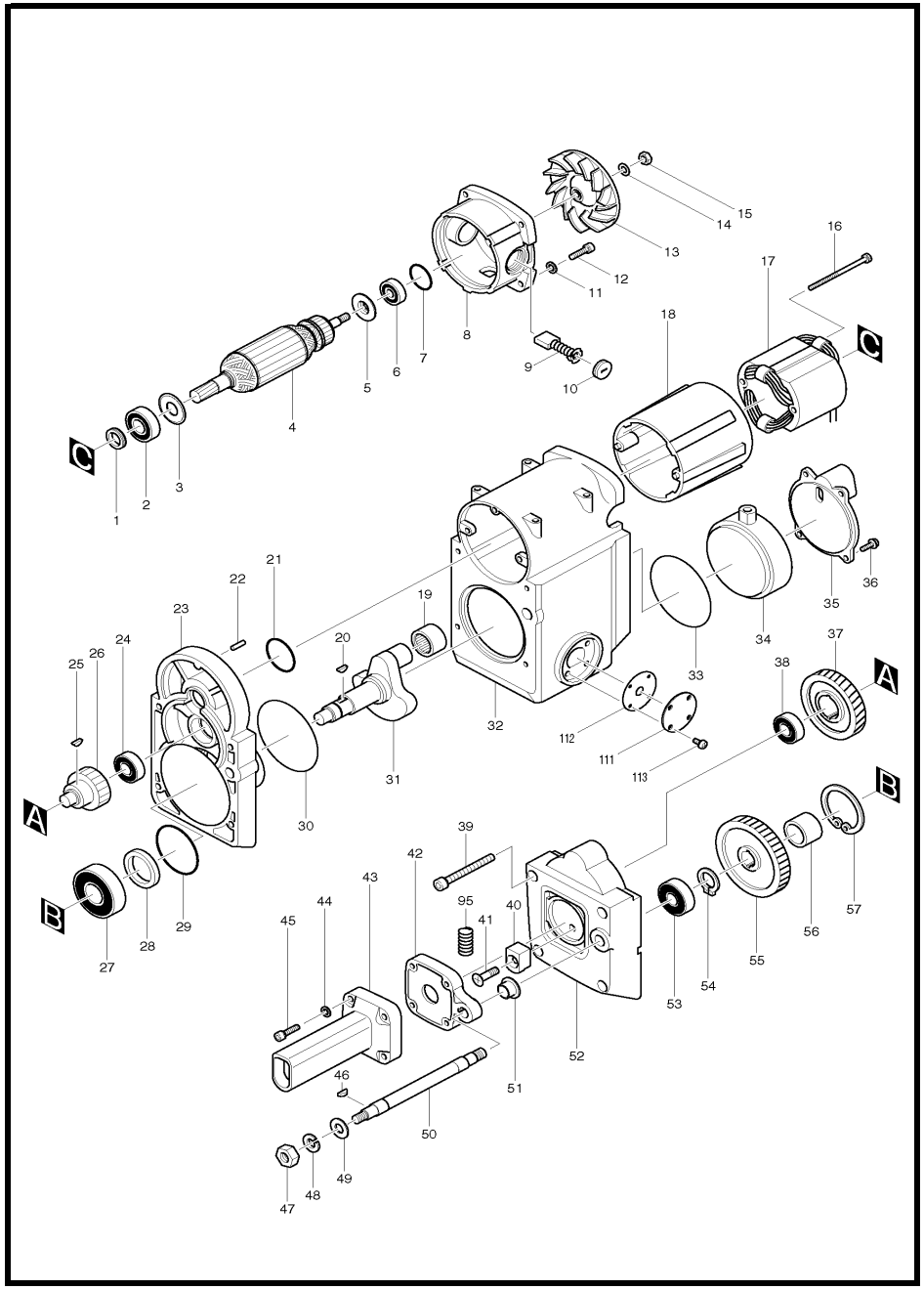

MODEL HM1800

ITEM	PARTS ID	DESCRIPTION	PRICE/BAHT	ITEM	PARTS ID	DESCRIPTION	PRICE/BAHT
001	322566-3	SCREW SEAL	230	054	961060-6	RETAINING RING S-20	50
002	211256-2	BALL BEARING 6203LLB	520	055	226242-0	SPUR GEAR 47	3,440
003	267706-5	WASHER 17	160	056	331416-1	SLEEVE 25	320
004	514993-0	ARMATURE ASS'Y 220V		057	962301-3	RETAINING RING R-62	170
005	681646-7	INSULATION WASHER	450	058	922331-6	HEX. SOCKET HEAD BOLT M6X20	90
006	211066-7	BALL BEARING 6200LLB	410	059	941152-7	FLAT WASHER 6	50
007	213406-5	O RING 30	30	060	419324-7	MOTOR HOUSING COVER	1,740
008	159530-9	MOTOR HOUSING B COMPLETE	2,680	061	322476-4	CONECTING ROD	2,040
009	B-80357	CARBON BRUSH SET CB-204A		062	213469-1	O RING 35	230
010	643710-2	BRUSH HOLDER CAP	150	063	268061-8	PIN 15	270
011	941151-9	FLAT WASHER 6	30	064	322480-3	PISTON CYLINDER	17,800
012	265914-2	HEX. SOCKET HEAD BOLT M6X25	90	065	213666-9	O RING 52	510
013	240024-6	FAN 100	530	066	322563-9	STRIKER	3,450
014	253165-9	FLAT WASHER 8	60	067	262050-5	RUBBER RING 54	320
015	931402-8	HEX. NUT M8	70	068	322548-5	CYLINDER B	3,730
016	265344-7	+ HEX. BOLT M5X85	160	069	213660-1	O RING 53	100
017	624953-5	FIELD 220V		070	922677-0	HEX. SOCKET BOLT M12X55	170
018	414787-2	MOTOR HOUSING A	1,210	071	942301-9	SPRING WASHER 12	50
019	212358-7	NEEDLE BEARING 2520	820	072	316313-2	CYLINDER A	15,480
020	254001-2	WOODRUFF KEY 4	80	073	213805-1	O RING 85	150
021	213507-9	O RING 40	70	074	322560-5	RETAINER RING	520
022	256151-9	PIN 5	80	075	233083-7	COMPRESSION SPRING 12	120
023	159531-7	GEAR HOUSING COMPLETE	6,410	076	322477-2	TOOL RETAINER POLE	1,640
024	211209-1	BALL BEARING 6202	410	077	256219-1	PIN 4	60
025	254001-2	WOODRUFF KEY 4	80	078	324236-0	TOOL RETAINER	9,390
026	226251-9	SPUR GEAR 22	2,850	079	324238-6	TOOL RETAINER SHAFT	1,360
027	211361-5	BALL BEARING 6305LLB	920	080	951272-9	SPRING PIN 8-40	100
028	213476-4	OIL SEAL 35	370	081	265989-1	HEX. SOCKET BOLT M12X45	190
029	213721-7	O RING 61	150	082	253989-3	SPRING WASHER 12	100
030	213806-9	O RING 90	120	083	322551-6	TOOL HOLDER 29	18,050
031	152414-0	CRANK SHAFT COMPLETE	3,630	084	213755-0	O RING 75	120
032	316550-8	CRANK HOUSING	19,640	085	213517-6	X RING 40	1,380
033	213806-9	O RING 90	120	086	322564-7	IMPACT BOLT	2,180
034	414785-6	CRANK HOUSING CAP	600	087	213667-7	O RING 60	640
035	414786-4	CAP COVER	550	088	322549-3	IMPACT BOLT HOLDER	3,730
036	251390-6	+ PAN HEAD SCREW M5X18	80	089	691025-1	POWER SUPPLY CORD 0.75-2-5.0	1,070
037	221793-8	HELICAL GEAR 50	2,810	090	682546-4	CORD GUARD 12-125	230
038	211209-1	BALL BEARING 6202	410	091	922381-1	HEX. SOCKET HEAD BOLT M6X60	150
039	922496-4	HEX. SOCKET HEAD BOLT M8X75	210	092	941152-7	FLAT WASHER 6	50
040	262538-5	RUBBER SLEEVE 8	230	093	182553-2	HANDLE SET	1,230
041	251389-1	+ COUNTERSUNK HEAD SCREW M8X2	150	094	324062-7	HANDLE BASE	3,480
042	324062-7	HANDLE BASE	3,480	095	233149-3	COMPRESSION SPRING 12	160
043	418415-1	SIDE HANDLE	810	096	953106-2	RIVET 0-5	20
044	941152-7	FLAT WASHER 6	50	098	922356-0	HEX. SOCKET HEAD BOLT M6X35	80
045	922341-3	HEX. SOCKET HEAD BOLT M6X25	90	099	316312-4	REAR CASE	3,550
046	254001-2	WOODRUFF KEY 4	80	100	256151-9	PIN 5	80
047	931602-0	HEX. NUT M12	80	102	687053-2	STRAIN RELIEF	70
048	942301-9	SPRING WASHER 12	50	103	265995-6	TAPPING SCREW 4X18	40
049	941301-6	FLAT WASHER 12	50	104	182553-2	HANDLE SET	1,230
050	322565-5	HANDLE SHAFT	2,590	105	911248-8	PAN HEAD SCREW M5X28	50
051	415148-9	NYLON BUSH 15	150	108	651131-4	SWITCH C3D-15MS	1,560
052	316792-4	GEAR HOUSING COVER	4,180	109	418332-5	SWITCH LEVER	320
053	211214-8	BALL BEARING 6302	560	110	421330-0	DUST COVER	320

SERVICE DRAWING

MODEL NO. HM1800

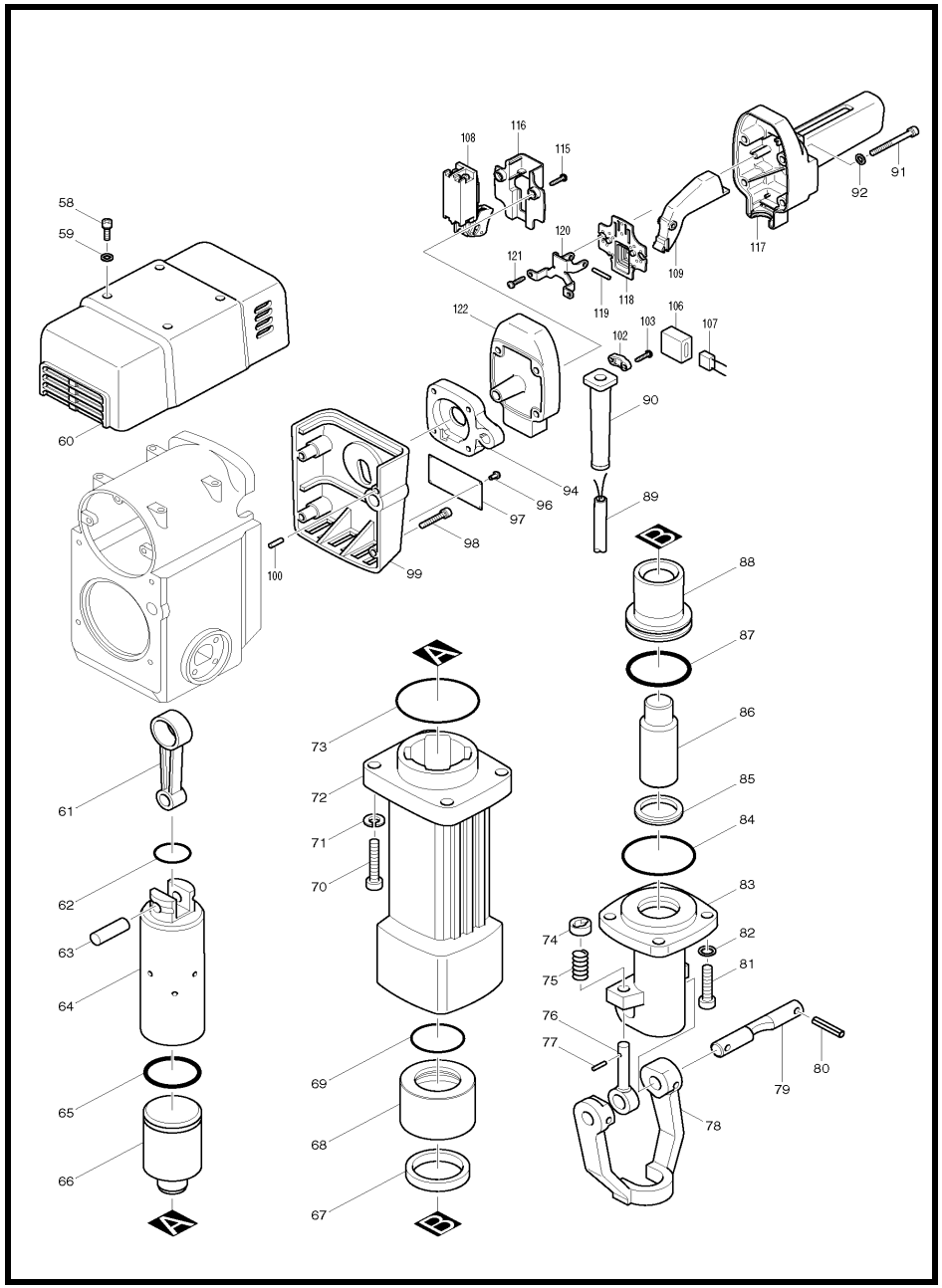

MODEL HM1800

ITEM	PARTS ID	DESCRIPTION	PRICE/BAHT
111	341397-1	PLATE 50	120
112	442009-0	PACKING 50	80
113	911211-1	PAN HEAD SCREW M5X12	30
114	421484-3	CUSHION RUBBER	470
115	265995-6	TAPPING SCREW 4X18	40
116	418331-7	SWITCH COVER	310
117	418333-3	HANDLE	1,040
118	421850-4	DUST PLATE	410
119	256206-0	PIN 4	80
120	345355-9	SUPPORT	490
121	265995-6	TAPPING SCREW 4X18	40
122	419044-3	HANDLE SUB BASE	670
A01	783203-8	HEX. WRENCH 5	100

SERVICE DRAWING

MODEL NO. HM1801

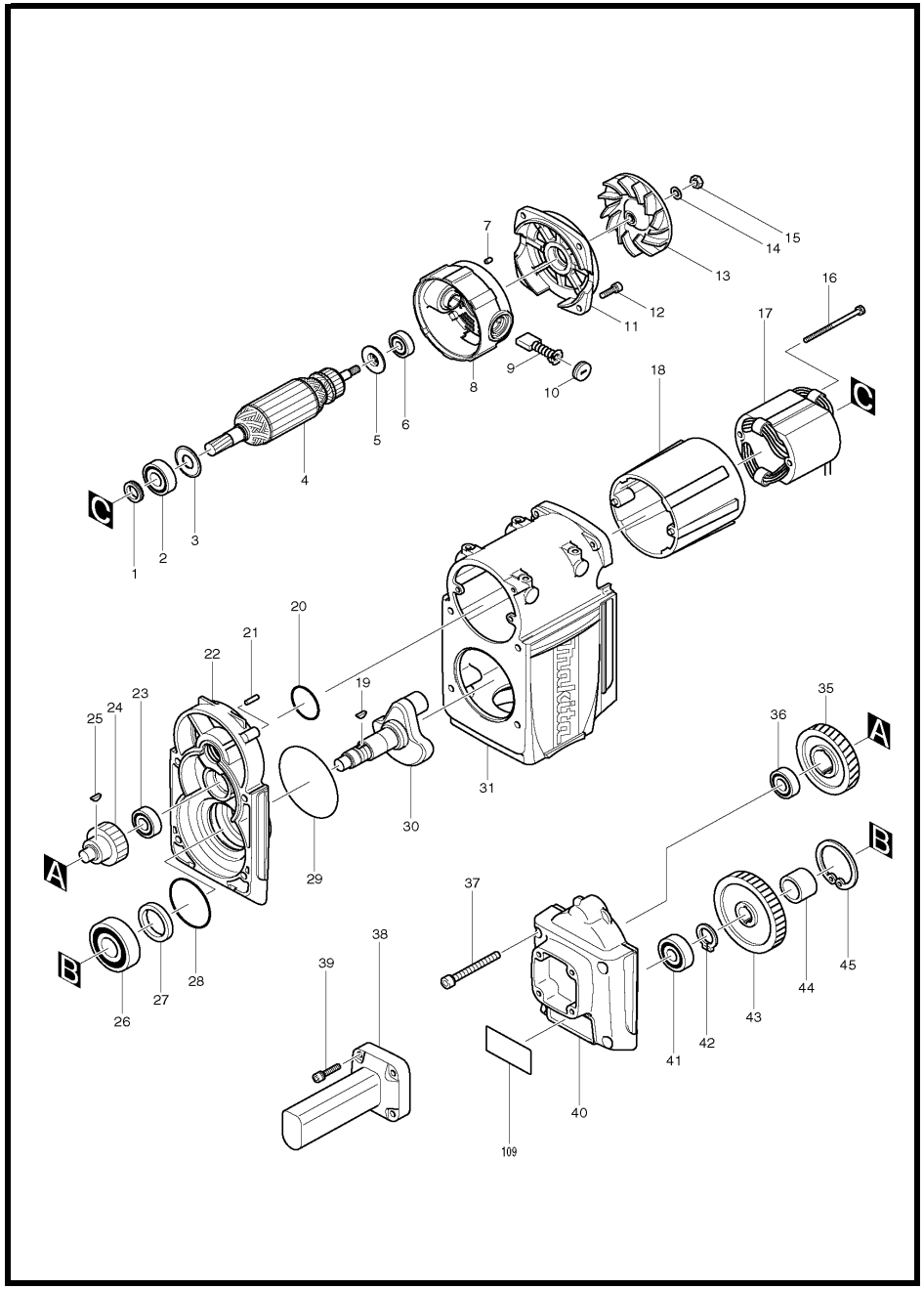

MODEL HM1801

ITEM	PARTS ID	DESCRIPTION	PRICE/BAHT	ITEM	PARTS ID	DESCRIPTION	PRICE/BAHT
001	322566-3	SCREW SEAL	230	054	324536-8	PISTON	2,680
002	211256-2	BALL BEARING 6203LLB	520	055	268130-5	PIN 15	290
003	267706-5	WASHER 17	160	056	213666-9	O RING 52	510
004	516922-9	ARMATURE ASS'Y 200-240V		057	331694-3	CYLINDER LINER 62	15,540
005	681646-7	INSULATION WASHER	450	058	213666-9	O RING 52	510
006	211087-9	BALL BEARING 6200DDW	380	059	324546-5	STRIKER	3,730
007	263002-9	RUBBER PIN 4	30	066	419001-1	CRANK CAP	800
008	154586-7	MOTOR HOUSING B COMPLETE	2,120	067	922331-6	HEX. SOCKET HEAD BOLT M6X20	90
009	B-80357	CARBON BRUSH SET CB-204A		078	256151-9	PIN 5	80
010	643710-2	BRUSH HOLDER CAP	150	079	450347-6	CAP	460
011	317899-9	BEARING BOX	1,900	080	162241-7	GASKET	680
012	265366-7	HEX. SOCKET HEAD BOLT M6X22	100	081	317917-3	BARREL	16,380
013	240024-6	FAN 100	530	082	942301-9	SPRING WASHER 12	50
014	253165-9	FLAT WASHER 8	60	083	922677-0	HEX. SOCKET BOLT M12X55	170
015	931402-8	HEX. NUT M8	70	084	213660-1	O RING 53	100
016	265344-7	+ HEX. BOLT M5X85	160	085	322548-5	CYLINDER B	3,730
017	626152-5	FIELD 200-220V		086	262050-5	RUBBER RING 54	320
018	414787-2	MOTOR HOUSING A	1,210	087	951272-9	SPRING PIN 8-40	100
019	254001-2	WOODRUFF KEY 4	80	088	324238-6	TOOL RETAINER SHAFT	1,360
020	213507-9	O RING 40	70	089	324236-0	TOOL RETAINER	9,390
021	256151-9	PIN 5	80	090	256219-1	PIN 4	60
022	154585-9	GEAR HOUSING COMPLETE	4,100	091	322477-2	TOOL RETAINER POLE	1,640
023	211209-1	BALL BEARING 6202	410	092	233083-7	COMPRESSION SPRING 12	120
024	226251-9	SPUR GEAR 22	2,850	093	322560-5	RETAINER RING	520
025	254001-2	WOODRUFF KEY 4	80	094	265989-1	HEX. SOCKET BOLT M12X45	190
026	211361-5	BALL BEARING 6305LLB	920	095	253989-3	SPRING WASHER 12	100
027	213476-4	OIL SEAL 35	370	096	324539-2	TOOL HOLDER 29	16,440
028	213721-7	O RING 61	150	097	213755-0	O RING 75	120
029	213806-9	O RING 90	120	098	213517-6	X RING 40	1,380
030	324544-9	CRANK SHAFT	1,510	099	324545-7	IMPACT BOLT	1,550
031	318027-9	CRANK HOUSING	20,970	100	213667-7	O RING 60	640
032	263002-9	RUBBER PIN 4	30	101	324541-5	IMPACT BOLT HOLDER	3,110
033	419262-3	CRANK HOUSING CAP	450	102	691025-1	POWER SUPPLY CORD 0.75-2-5.0	1,070
034	419263-1	CAP COVER	510	103	682546-4	CORD GUARD 12-125	230
035	221793-8	HELICAL GEAR 50	2,810	104	631671-8	PILOT LAMP	600
036	211209-1	BALL BEARING 6202	410	105	638378-7	LEAD UNIT	250
037	922496-4	HEX. SOCKET HEAD BOLT M8X75	210	106	418951-7	LENS	210
038	418415-1	SIDE HANDLE	810	107	317901-8	REAR CASE	2,550
039	922353-6	HEX.SOCKET HEAD BOLT M6X30	90	108	922366-7	HEX. SOCKET HEAD BOLT M6X45	110
040	317902-6	GEAR HOUSING COVER	3,280	109	861404-9	HM1801 NAME PLATE	80
041	211214-8	BALL BEARING 6302	560	110	418954-1	TOP COVER	320
042	961060-6	RETAINING RING S-20	50	111	419044-3	HANDLE SUB BASE	670
043	226242-0	SPUR GEAR 47	3,440	115	687053-2	STRAIN RELIEF	70
044	331416-1	SLEEVE 25	320	116	265995-6	TAPPING SCREW 4X18	40
045	962301-3	RETAINING RING R-62	170	120	265535-0	HEX.SOCKET HEAD BOLT M6X65	120
046	922331-6	HEX. SOCKET HEAD BOLT M6X20	90	121	941152-7	FLAT WASHER 6	50
047	941152-7	FLAT WASHER 6	50	122	418333-3	HANDLE	1,040
048	419324-7	MOTOR HOUSING COVER	1,740	123	418332-5	SWITCH LEVER	320
049	267296-8	FLAT WASHER 63	290	124	421850-4	DUST PLATE	410
050	324580-5	SPACER	1,370	125	256206-0	PIN 4	80
051	212358-7	NEEDLE BEARING 2520	820	126	345355-9	SUPPORT	490
052	322476-4	CONECTING ROD	2,040	127	265995-6	TAPPING SCREW 4X18	40
053	213662-7	O RING 55	80	128	651131-4	SWITCH C3D-15MS	1,560

SERVICE DRAWING

MODEL NO. HM1801

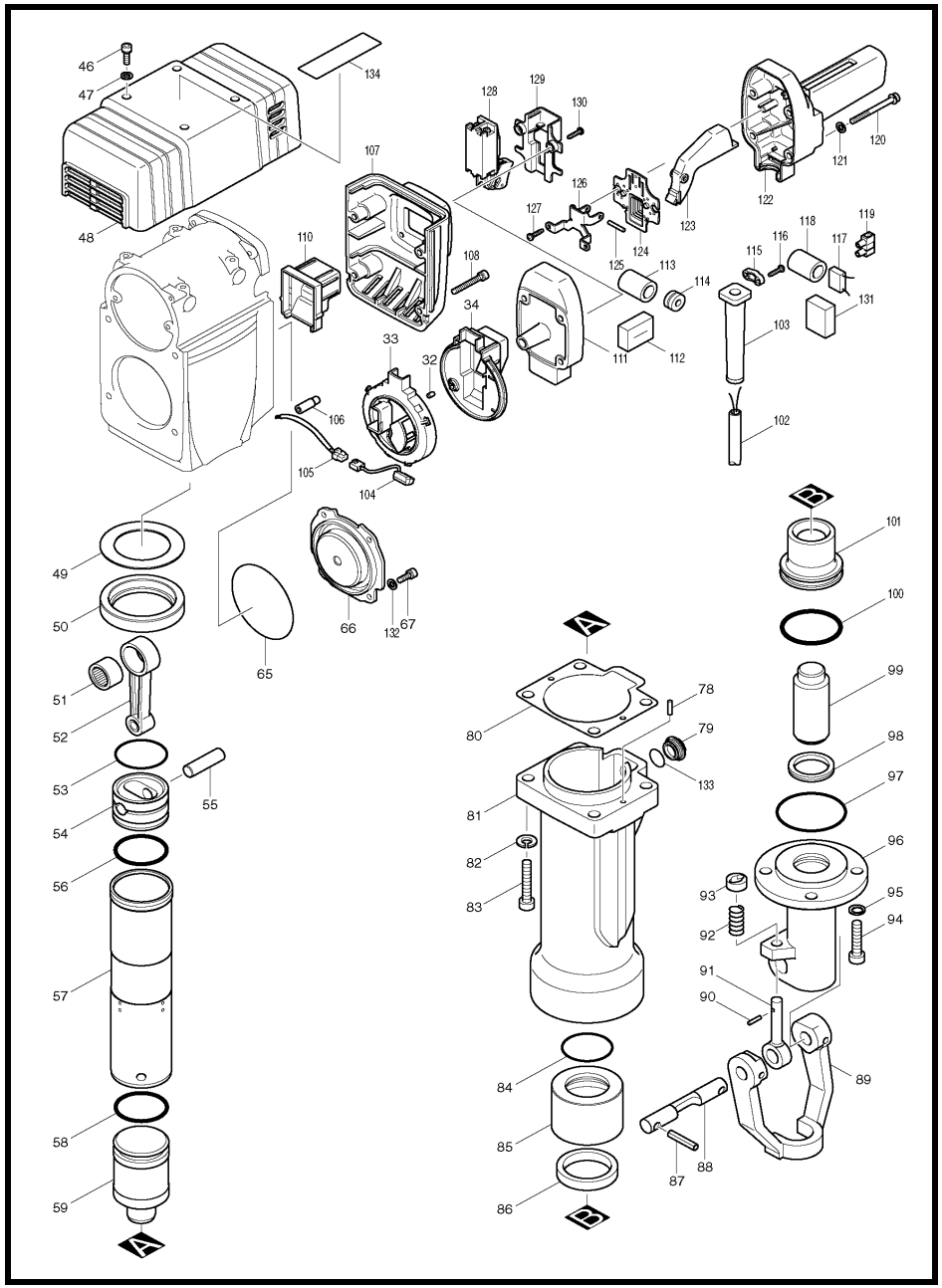

MODEL HM1801

ITEM	PARTS ID	DESCRIPTION	PRICE/BAHT
129	419045-1	SWITCH COVER	340
130	265995-6	TAPPING SCREW 4X18	40
132	941152-7	FLAT WASHER 6	50
133	213953-6	O RING 24	40
135	265995-6	TAPPING SCREW 4X18	40
136	424132-3	CAP RUBBER	90
A01	783203-8	HEX. WRENCH 5	100
A03	D-20747	BULL POINT 410	1,400

SERVICE DRAWING

MODEL NO. HM1810

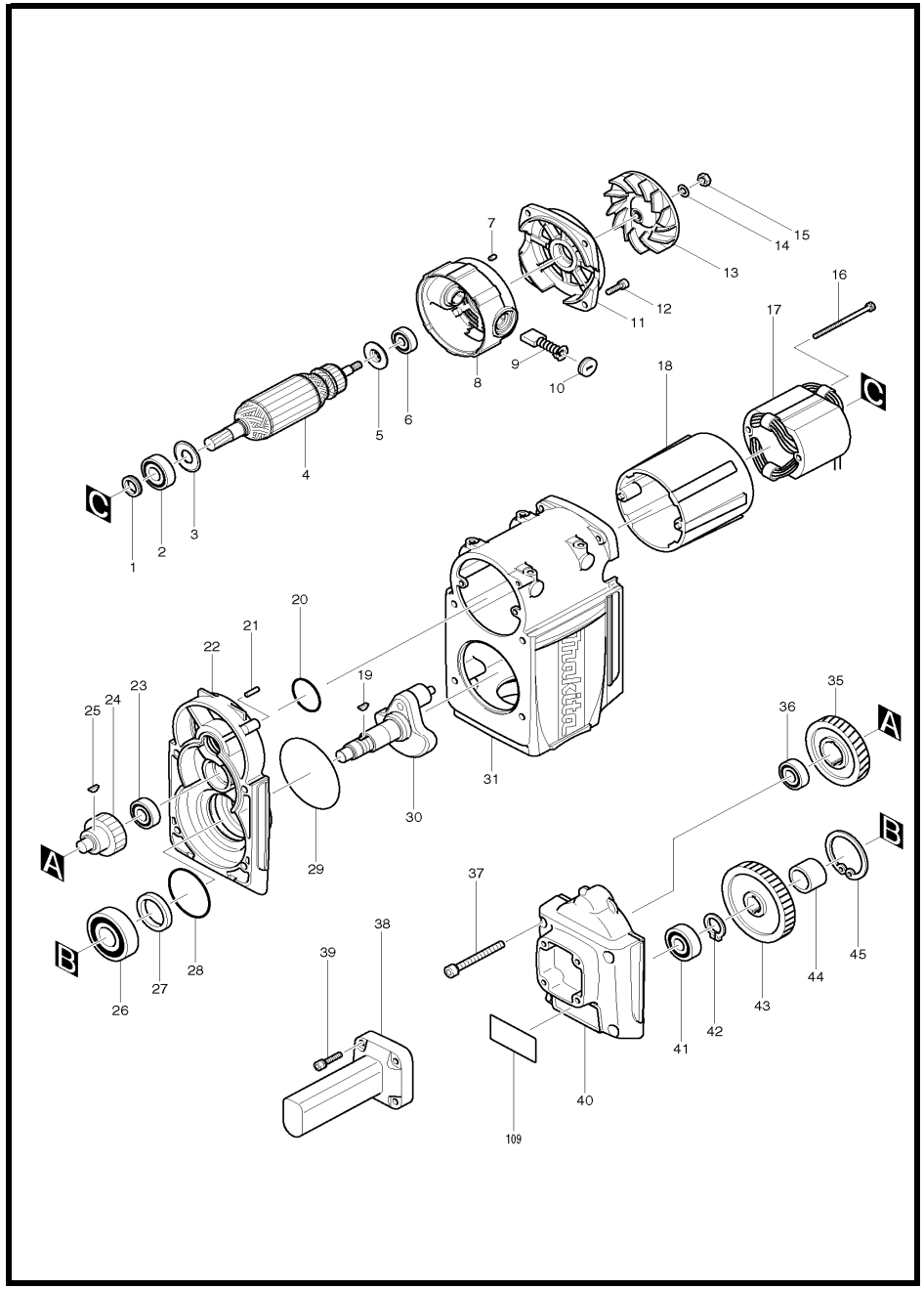

MODEL HM1810

ITEM	PARTS ID	DESCRIPTION	PRICE/BAHT	ITEM	PARTS ID	DESCRIPTION	PRICE/BAHT
001	322566-3	SCREW SEAL	230	054	324536-8	PISTON	2,680
002	211256-2	BALL BEARING 6203LLB	520	055	268130-5	PIN 15	290
003	267706-5	WASHER 17	160	056	213666-9	O RING 52	510
004	516922-9	ARMATURE ASS'Y 200-240V		057	331694-3	CYLINDER LINER 62	15,540
005	681646-7	INSULATION WASHER	450	058	213666-9	O RING 52	510
006	211087-9	BALL BEARING 6200DDW	380	059	324546-5	STRIKER	3,730
007	263002-9	RUBBER PIN 4	30	060	418949-4	SPACER 68	200
008	154586-7	MOTOR HOUSING B COMPLETE	2,120	061	154589-1	BALLANCER COMPLETE	7,710
009	B-80357	CARBON BRUSH SET CB-204A		062	418949-4	SPACER 68	200
010	643710-2	BRUSH HOLDER CAP	150	064	154946-3	CONNECTING ROD COMPLETE	1,220
011	317899-9	BEARING BOX	1,900	065	213855-6	O RING 95	150
012	265366-7	HEX. SOCKET HEAD BOLT M6X22	100	066	318028-7	CRANK BOX	2,050
013	240024-6	FAN 100	530	067	922331-6	HEX. SOCKET HEAD BOLT M6X20	90
014	253165-9	FLAT WASHER 8	60	068	267297-6	FLAT WASHER 65	290
015	931402-8	HEX. NUT M8	70	069	212701-0	NEEDLE BEARING 7025	1,680
016	265344-7	+ HEX. BOLT M5X85	160	070	154587-5	CRANK COMPLETE	2,990
017	626152-5	FIELD 200-220V		071	331718-5	SPACER	380
018	414787-2	MOTOR HOUSING A	1,210	072	267297-6	FLAT WASHER 65	290
019	254001-2	WOODRUFF KEY 4	80	073	962354-2	RETAINING RING R-80	230
020	213507-9	O RING 40	70	074	213765-7	O RING 78	150
021	256151-9	PIN 5	80	075	418952-5	STOPPER	460
022	154585-9	GEAR HOUSING COMPLETE	4,100	076	266464-0	HEX. SOCKET HEAD BOLT M5X20	90
023	211209-1	BALL BEARING 6202	410	077	345569-0	PLATE	530
024	226251-9	SPUR GEAR 22	2,850	078	256151-9	PIN 5	80
025	254001-2	WOODRUFF KEY 4	80	079	450347-6	CAP	460
026	211361-5	BALL BEARING 6305LLB	920	080	162241-7	GASKET	680
027	213476-4	OIL SEAL 35	370	081	318354-4	BARREL	17,060
028	213721-7	O RING 61	150	082	942301-9	SPRING WASHER 12	50
029	213806-9	O RING 90	120	083	922677-0	HEX. SOCKET BOLT M12X55	170
030	154588-3	CRANK SHAFT COMPLETE	1,750	084	213660-1	O RING 53	100
031	318027-9	CRANK HOUSING	20,970	085	322548-5	CYLINDER B	3,730
032	263002-9	RUBBER PIN 4	30	086	262050-5	RUBBER RING 54	320
033	419262-3	CRANK HOUSING CAP	450	087	951272-9	SPRING PIN 8-40	100
034	419263-1	CAP COVER	510	088	324238-6	TOOL RETAINER SHAFT	1,360
035	221793-8	HELICAL GEAR 50	2,810	089	324236-0	TOOL RETAINER	9,390
036	211209-1	BALL BEARING 6202	410	090	256219-1	PIN 4	60
037	922496-4	HEX. SOCKET HEAD BOLT M8X75	210	091	322477-2	TOOL RETAINER POLE	1,640
038	418415-1	SIDE HANDLE	810	092	233083-7	COMPRESSION SPRING 12	120
039	922353-6	HEX.SOCKET HEAD BOLT M6X30	90	093	322560-5	RETAINER RING	520
040	317902-6	GEAR HOUSING COVER	3,280	094	265989-1	HEX. SOCKET BOLT M12X45	190
041	211214-8	BALL BEARING 6302	560	095	253989-3	SPRING WASHER 12	100
042	961060-6	RETAINING RING S-20	50	096	324539-2	TOOL HOLDER 29	16,440
043	226242-0	SPUR GEAR 47	3,440	097	213755-0	O RING 75	120
044	331416-1	SLEEVE 25	320	098	213517-6	X RING 40	1,380
045	962301-3	RETAINING RING R-62	170	099	324545-7	IMPACT BOLT	1,550
046	922331-6	HEX. SOCKET HEAD BOLT M6X20	90	100	213667-7	O RING 60	640
047	941152-7	FLAT WASHER 6	50	101	324541-5	IMPACT BOLT HOLDER	3,110
048	419324-7	MOTOR HOUSING COVER	1,740	102	691025-1	POWER SUPPLY CORD 0.75-2-5.0	1,070
049	267296-8	FLAT WASHER 63	290	103	682546-4	CORD GUARD 12-125	230
050	324580-5	SPACER	1,370	104	631671-8	PILOT LAMP	600
051	212358-7	NEEDLE BEARING 2520	820	105	638378-7	LEAD UNIT	250
052	322476-4	CONECTING ROD	2,040	106	418951-7	LENS	210
053	213662-7	O RING 55	80	107	317901-8	REAR CASE	2,550

SERVICE DRAWING

MODEL NO. HM1810

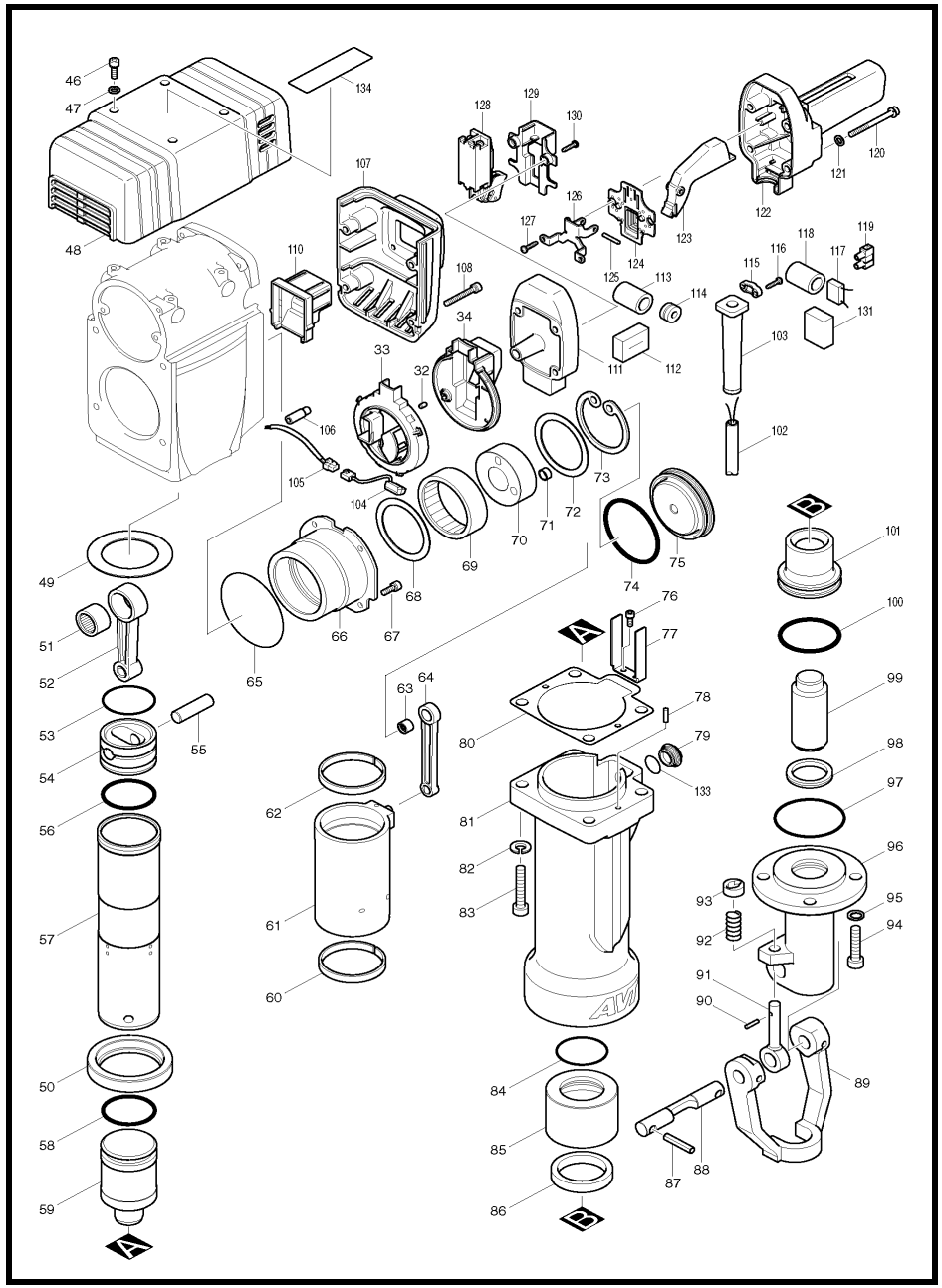

MODEL HM1810

ITEM	PARTS ID	DESCRIPTION	PRICE/BAHT
108	922366-7	HEX. SOCKET HEAD BOLT M6X45	110
110	418954-1	TOP COVER	320
111	419044-3	HANDLE SUB BASE	670
115	687053-2	STRAIN RELIEF	70
116	265995-6	TAPPING SCREW 4X18	40
120	265535-0	HEX.SOCKET HEAD BOLT M6X65	120
121	941152-7	FLAT WASHER 6	50
122	418333-3	HANDLE	1,040
123	418332-5	SWITCH LEVER	320
124	421850-4	DUST PLATE	410
125	256206-0	PIN 4	80
126	345355-9	SUPPORT	490
127	265995-6	TAPPING SCREW 4X18	40
128	651131-4	SWITCH C3D-15MS	1,560
129	419045-1	SWITCH COVER	340
130	265995-6	TAPPING SCREW 4X18	40
133	213953-6	O RING 24	40
135	265995-6	TAPPING SCREW 4X18	40
136	424132-3	CAP RUBBER	90
A01	783203-8	HEX. WRENCH 5	100

SERVICE DRAWING

MODEL NO. HP1230

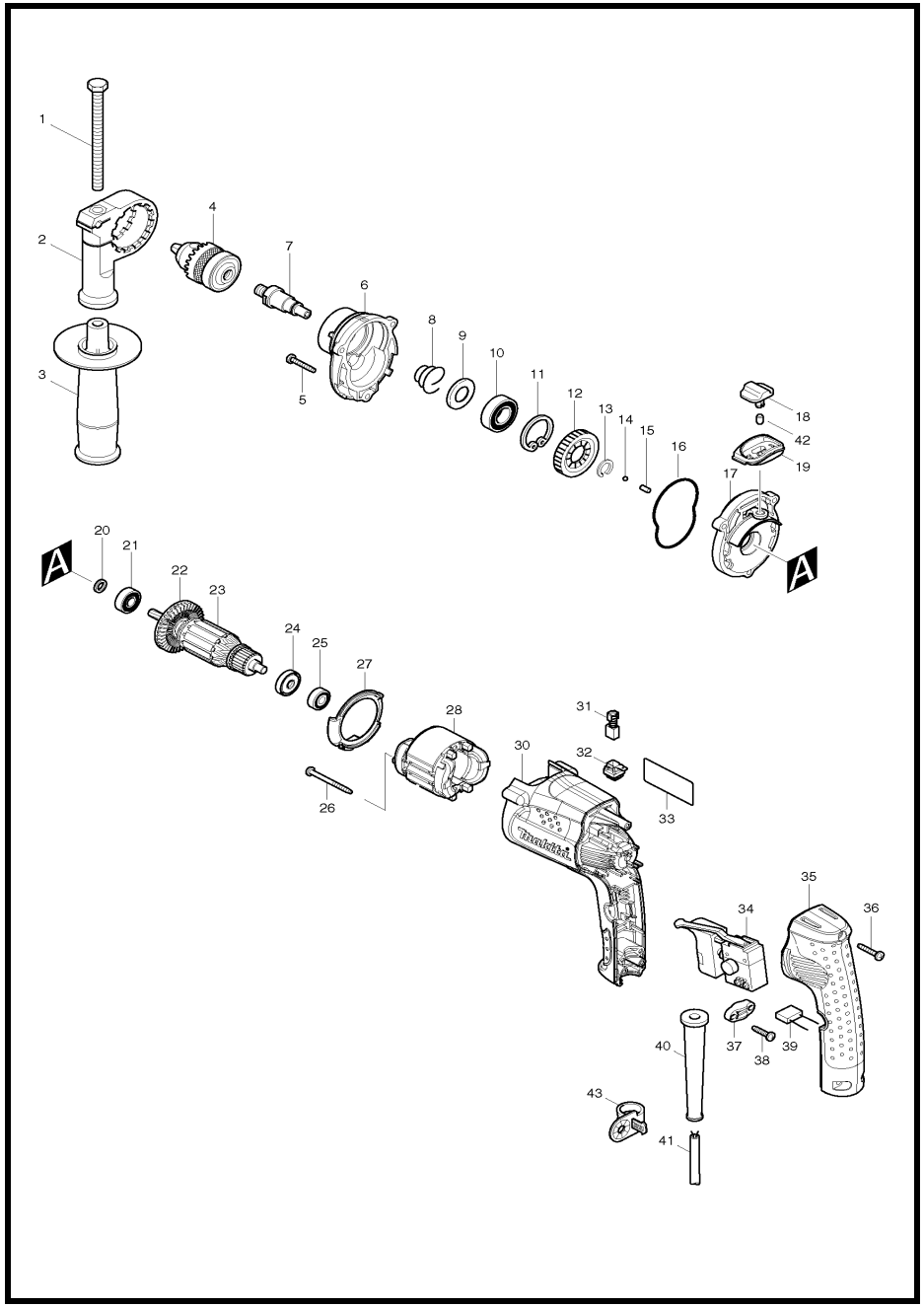

MODEL HP1230

ITEM	PARTS ID	DESCRIPTION	PRICE/BAHT
001	921919-9	HEX. BOLT M8X110	210
002	417911-6	GRIP BASE	190
003	153503-4	GRIP 36 COMPLETE	170
004	192879-4	DRILL CHUCK	1,770
005	266374-1	TAPPING SCREW 4X25	30
006	318178-8	GEAR HOUSING	420
007	324276-8	SPINDLE	310
008	233921-3	CONICAL COMPRESSION SPRING	40
009	345224-4	CUP WASHER 15	70
010	211247-3	BALL BEARING 6002DDW	170
011	962151-6	RETAINING RING R-32	90
012	226558-3	HELICAL GEAR 37	350
013	961082-6	RETAINING RING WR12	50
014	216001-0	STEEL BALL 3.5	20
015	256251-5	PIN 4	60
016	424041-6	SEAL RING	90
017	158356-6	CAM HOUSING COMPLETE	700
018	418083-0	CHANGE LEVER A	70
019	450090-7	LEVER CASE	130
020	262087-2	RING 8	360
021	210005-4	BALL BEARING 608DDW	240
023	517418-3	ARMATURE ASS'Y 220V	
024	681652-2	INSULATION WASHER	60
025	211021-9	BALL BEARING 607LLB	240
026	266425-0	TAPPING SCREW 4X45	70
027	450091-5	BAFFLE PLATE	110
028	633533-6	FIELD 220V	
030	450088-4	MOTOR HOUSING	630
031	B-80422	CARBON BRUSH SET CB-419A	
032	643995-0	BRUSH HOLDER	130
034	650511-1	SWITCH TG813ALB-1	1,830
035	450089-2	HANDLE COVER	500
036	266424-2	TAPPING SCREW 4X20	70
037	687140-7	STRAIN RELIEF	40
038	265995-6	TAPPING SCREW 4X18	40
040	682566-8	CORD GUARD 10	80
041	691005-7	POWER SUPPLY CORD 0.75-2-2.0	880
042	263002-9	RUBBER PIN 4	30
043	410102-8	KEY HOLDER	80
A02	763415-9	CHUCK KEY S10	230

SERVICE DRAWING

MODEL NO. HP1500

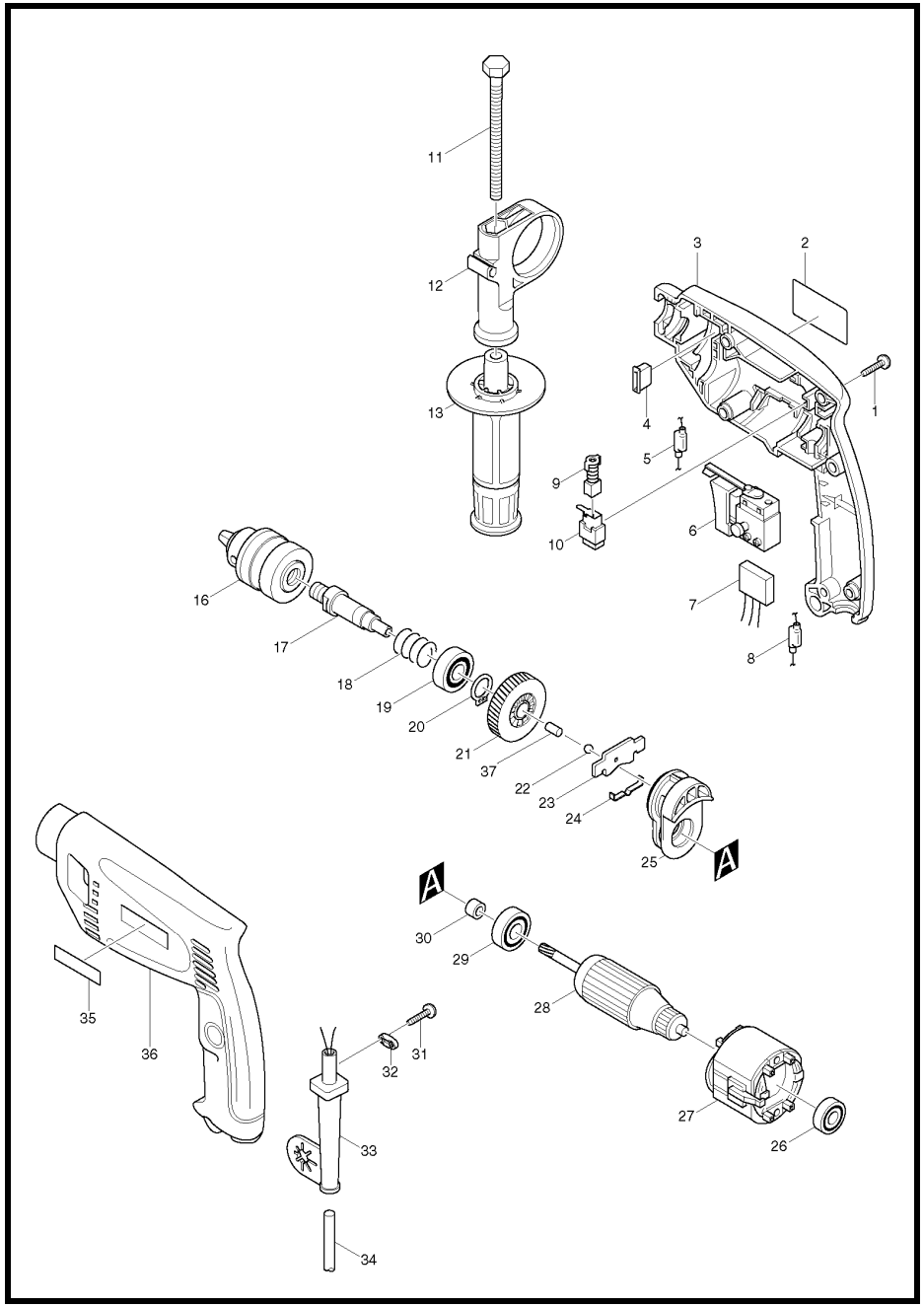

MODEL HP1500

ITEM	PARTS ID	DESCRIPTION	PRICE/BAHT
001	265995-6	TAPPING SCREW 4X18	40
003	182841-7	HOUSING SET	960
004	415453-4	CHANGE BUTTON	50
005	646068-8	CHOKE COIL	230
006	651986-7	SWITCH TG803TLB-1	1,480
007	645144-5	NOISE SUPPRESSOR	320
008	646092-1	CHOKE COIL	270
009	B-80422	CARBON BRUSH SET CB-419A	
010	643936-6	BRUSH HOLDER	230
011	921923-8	HEX. BOLT M8X120	80
012	415485-1	GRIP BASE	250
013	152489-9	GRIP 36 COMPLETE	230
016	763142-8	DRILL CHUCK S13	1,050
017	323757-9	SPINDLE	690
018	233091-8	COMPRESSION SPRING 16	50
019	211201-7	BALL BEARING 6002LLB	560
020	961055-9	RETAINING RING S-15	50
021	226423-6	HELICAL GEAR 41	510
022	216001-0	STEEL BALL 3.5	20
023	344419-6	CHANGE PLATE	120
024	232134-3	LEAF SPRING	50
025	152529-3	CAM HOLDER COMPLETE	560
026	211028-5	BALL BEARING 627LB	290
027	633303-3	FIELD 220V	
028	517108-8	ARMATURE ASS'Y 220-240V	
029	211033-2	BALL BEARING 608LB	200
030	262528-8	SLEEVE 7	50
031	265995-6	TAPPING SCREW 4X18	40
032	687063-9	CORD CLAMP	50
034	666053-5	POWER SUPPLY CORD 1.0-2-2.0	410
036	182841-7	HOUSING SET	960
037	256251-5	PIN 4	60
A01	763440-0	CHUCK KEY S13	190

SERVICE DRAWING

MODEL NO. HP1620

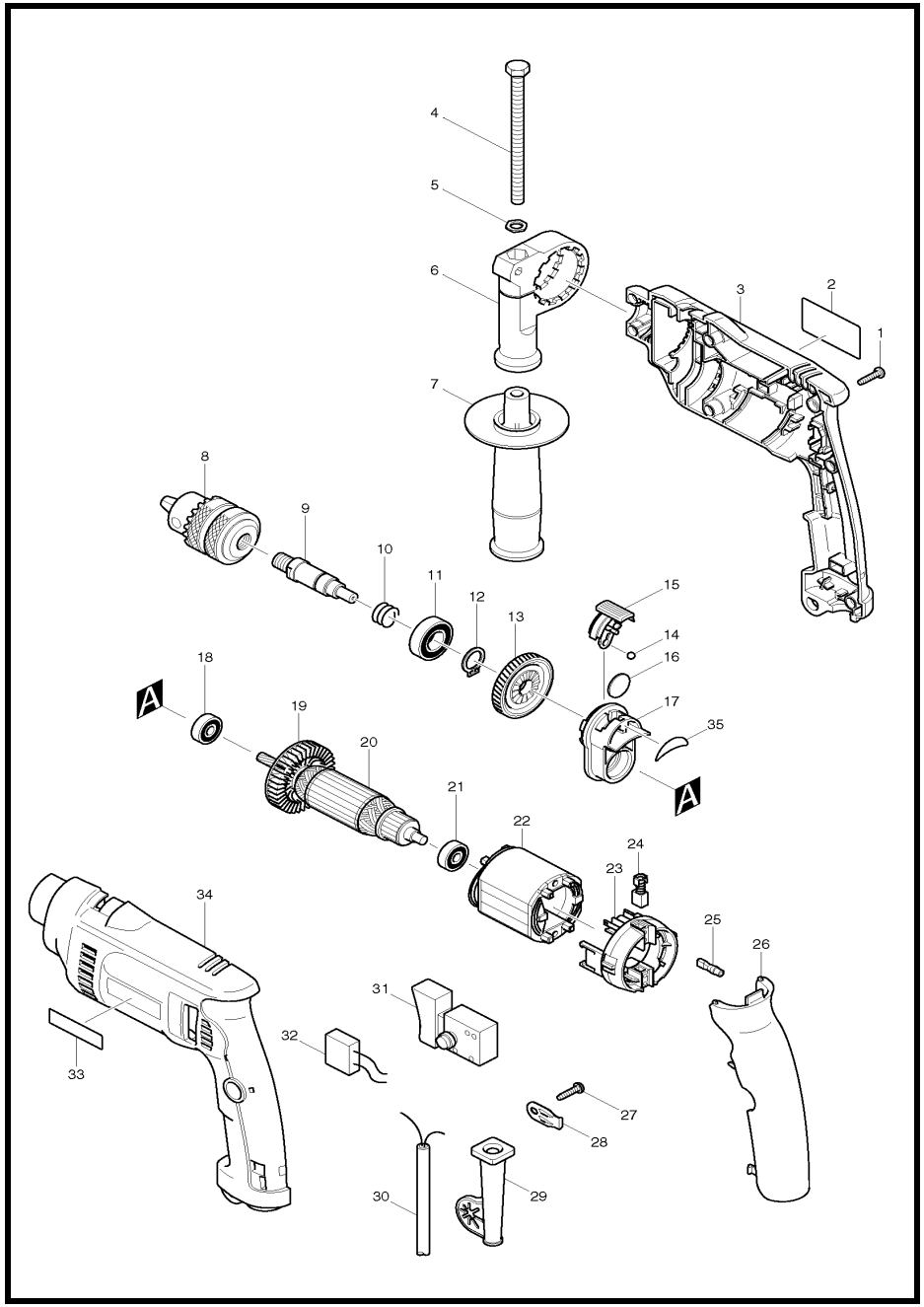

MODEL HP1620

ITEM	PARTS ID	DESCRIPTION	PRICE/BAHT
001	265995-6	TAPPING SCREW 4X18	40
002	850755-5	NAME PLATE HP1620	80
003	183711-3	HOUSING SET	1,270
004	265583-9	HEX. BOLT M8X120	160
005	345280-4	HEX. WASHER	30
006	417630-4	GRIP BASE	190
007	152489-9	GRIP 36 COMPLETE	230
008	196008-1	DRILL CHUCK S13	
009	324397-6	SPINDLE	350
010	233389-3	COMPRESSION SPRING 15	50
011	211201-7	BALL BEARING 6002LLB	560
012	961055-9	RETAINING RING S-15	50
013	226579-5	HELICAL GEAR 45	460
014	216018-3	STEEL BALL 5.0	20
015	418319-7	CHANGE LEVER	110
016	345354-1	PLATE 19	170
017	141165-0	CAM HOLDER COMPLETE	720
018	210023-2	BALL BEARING 627DDW	210
020	517458-1	ARMATURE ASS'Y 220-240V	
021	211028-5	BALL BEARING 627LB	290
022	633568-7	FIELD 220-240V	
023	638237-5	BRUSH HOLDER UNIT	880
024	B-80422	CARBON BRUSH SET CB-419A	
025	686038-5	RECEPTACLE SLEEVE	20
026	418320-2	HANDLE COVER	270
027	265995-6	TAPPING SCREW 4X18	40
028	687169-3	STRAIN RELIEF	60
029	682549-8	CORD GUARD 8-85	170
030	666053-5	POWER SUPPLY CORD 1.0-2-2.0	410
031	650543-8	SWITCH TG843TB-1	1,210
034	183711-3	HOUSING SET	1,270
035	345400-0	SPACER	170
A01	763448-4	CHUCK KEY S13	

SERVICE DRAWING

MODEL NO. HP1630

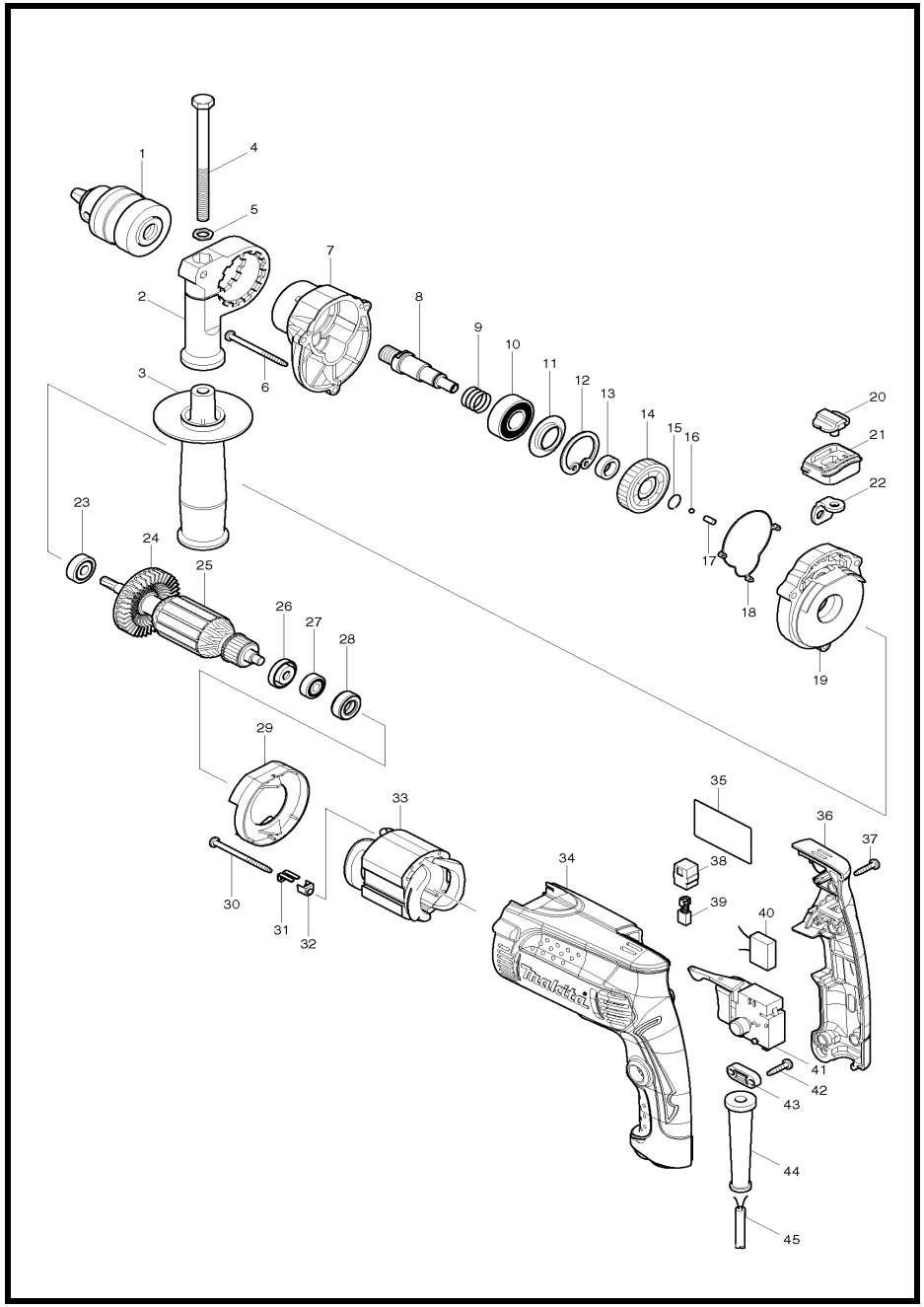

MODEL HP1630

ITEM	PARTS ID	DESCRIPTION	PRICE/BAHT
001	763161-4	DRILL CHUCK S13	700
002	417630-4	GRIP BASE	190
003	153503-4	GRIP 36 COMPLETE	170
004	265495-6	HEX. BOLT M8X110	110
005	345280-4	HEX. WASHER	30
006	266361-0	TAPPING SCREW 4X30	70
007	450619-9	GEAR HOUSING	160
008	324223-9	SPINDLE	350
009	233330-6	COMPRESSION SPRING 16	110
010	211241-5	BALL BEARING 6202DDW	180
011	257246-1	RING 19	100
012	962153-2	RETAINING RING R-35	80
013	257173-2	RING 12	80
014	226589-2	HELICAL GEAR 37	230
015	233938-6	RING SPRING 12	20
016	216001-0	STEEL BALL 3.5	20
017	256251-5	PIN 4	60
018	424112-9	SEAL RING	50
019	158676-8	GEAR HOUSING COVER COMPLETE	490
020	417819-4	CHANGE LEVER	60
021	450621-2	LEVER CASE	100
022	345944-0	CHANGE PLATE	80
023	211031-6	BALL BEARING 608LLB	190
025	515308-4	ARMATURE ASS'Y 220V	
026	681636-0	INSULATION WASHER	60
027	211021-9	BALL BEARING 607LLB	240
028	421808-3	RUBBER RING 19	100
029	450620-4	BAFFLE PLATE	80
030	266415-3	TAPPING SCREW 4X55	40
031	344871-8	RETAINER	80
032	417237-6	INSULATION COVER	100
033	626603-8	FIELD 220V	
034	450617-3	MOTOR HOUSING	660
036	158677-6	HANDLE COVER COMPLETE	320
037	266326-2	TAPPING SCREW 4X18	30
038	643563-9	BRUSH HOLDER 5X8	90
039	B-80282	CARBON BRUSH SET CB-85A	
041	650695-5	SWITCH C3GA-2L	820
042	266326-2	TAPPING SCREW 4X18	30
043	687124-5	STRAIN RELIEF	70
044	682569-2	CORD GUARD 8-85	110
045	691055-2	POWER SUPPLY CORD 0.75-2-2.0	1,100
A01	418163-2	KEY HOLDER 10	60
A02	763441-8	CHUCK KEY S13	180

SERVICE DRAWING

MODEL NO. HP2050/HP2051

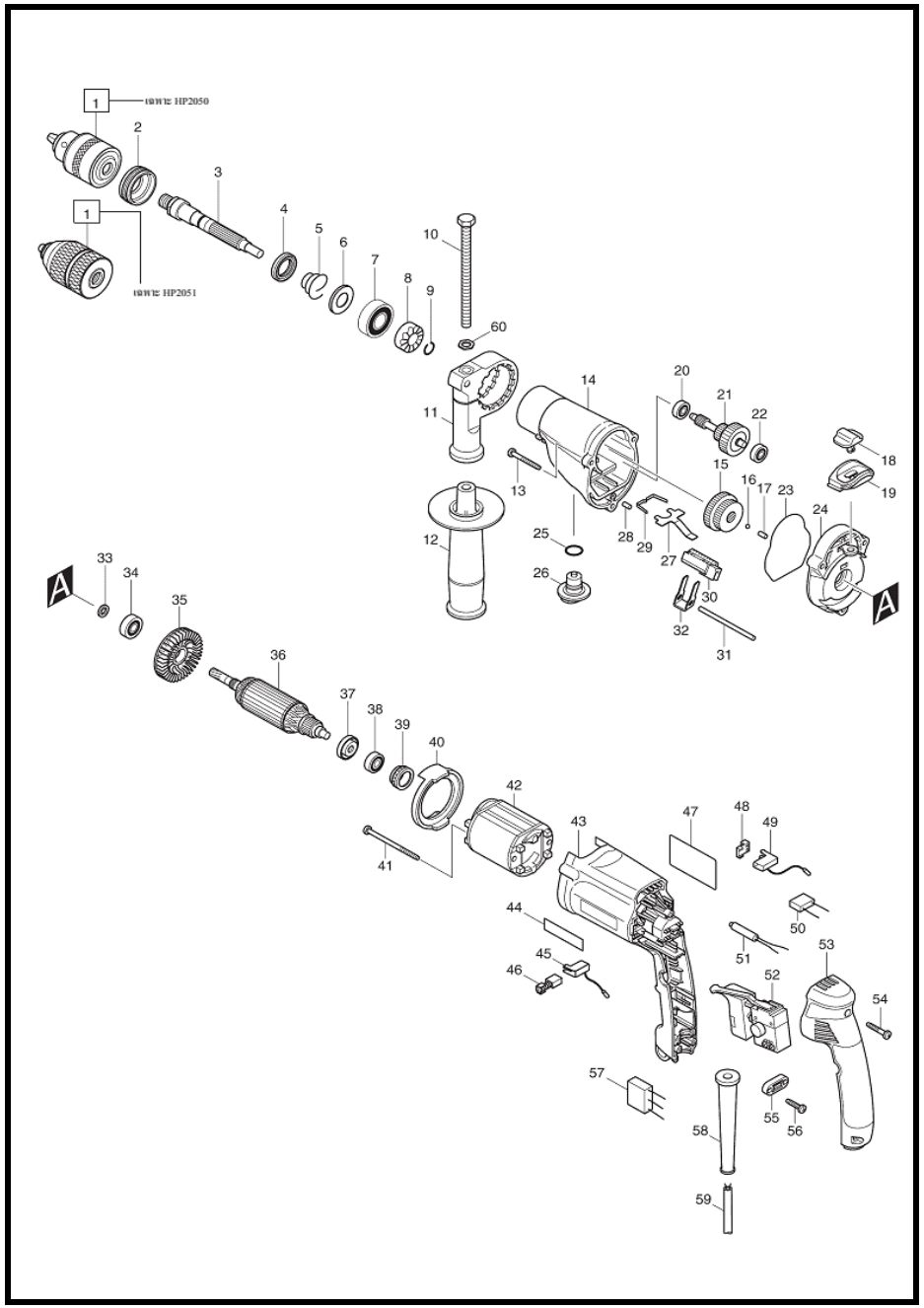

MODEL HP2050/HP2051

ITEM	PARTS ID	DESCRIPTION	PRICE/BAHT
001	193067-6	DRILL CHUCK & KEY SET (HP2050)	2,090
001	194254-0	KEYLESS DRILL CHUCK SET (HP2051)	3,870
002	285839-4	BEARING RETAINER	310
003	324247-5	SPINDLE	1,100
004	213314-0	OIL SEAL 19	310
005	233921-3	CONICAL COMPRESSION SPRING	40
006	345224-4	CUP WASHER 15	70
007	211206-7	BALL BEARING 6202LLB	460
008	223137-8	CAM A	250
009	233920-5	RING SPRING 11	60
010	921923-8	HEX. BOLT M8X120	80
011	417630-4	GRIP BASE	190
012	135302-6	GRIP 36 ASS'Y	290
013	266053-1	TAPPING SCREW 4X35	40
014	153379-9	GEAR HOUSING COMPLETE	1,920
015	227030-8	SPUR GEAR 29-37	240
016	216001-0	STEEL BALL 3.5	20
017	256251-5	PIN 4	60
018	418083-0	CHANGE LEVER A	70
019	417802-1	LEVER CASE	100
020	211012-0	BALL BEARING 606ZZ	230
021	153622-6	GEAR COMPLETE	1,290
022	211012-0	BALL BEARING 606ZZ	230
023	421810-6	SEAL RING	100
024	153620-0	GEAR HOUSING COVER COMPLETE	840
025	213122-9	O RING 12	30
026	417805-5	CHANGE LEVER B	120
027	345225-2	LOCK PLATE	80
028	256251-5	PIN 4	60
029	232143-2	LEAF SPRING	80
030	417804-7	RACK 12	110
031	268092-7	PIN 4	50
032	345223-6	CHANGE PLATE B	80
033	262087-2	RING 8	360
034	210005-4	BALL BEARING 608DDW	240
036	517413-3	ARMATURE ASS'Y 220V	
037	681636-0	INSULATION WASHER	60
038	211021-9	BALL BEARING 607LLB	240
039	421494-0	RUBBER RING 19	250
040	417803-9	BAFFLE PLATE	110
041	266060-4	TAPPING SCREW 4X65	120
042	633528-9	FIELD 220-240V	
043	417807-1	MOTOR HOUSING	710
045	643989-5	BRUSH HOLDER	150
048	689111-0	SPACER	90
049	643988-7	BRUSH HOLDER	150
052	650524-2	SWITCH TG813ALB-2	1,950
053	153284-0	HANDLE COVER COMPLETE	720
054	265999-8	TAPPING SCREW 4X25	30
055	687053-2	STRAIN RELIEF	70
056	265995-6	TAPPING SCREW 4X18	40
058	682566-8	CORD GUARD 10	80
059	691015-4	POWER SUPPLY CORD 0.75-2-2.5	740
060	345280-4	HEX. WASHER	30
061	263002-9	RUBBER PIN 4	30
A01	324219-0	DEPTH GAUGE	100
A02	410102-8	KEY HOLDER	80
A04	763430-3	CHUCK KEY S13 (HP2050)	150

SERVICE DRAWING

MODEL NO. HP330D

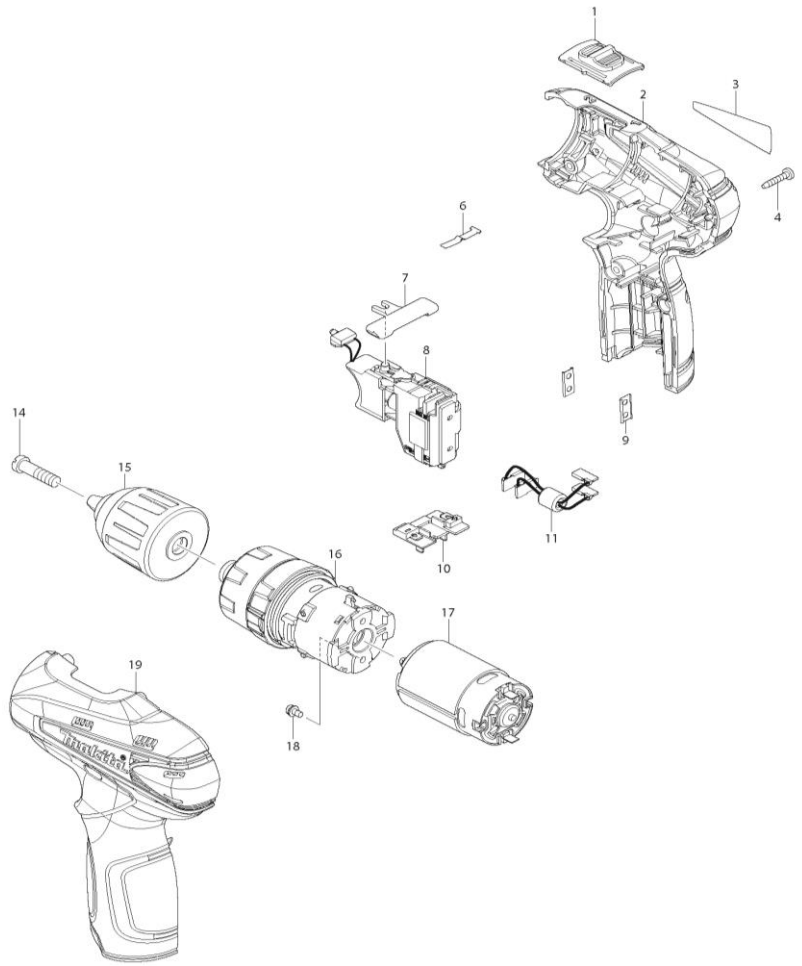

MODEL HP330D

ITEM	PARTS ID	DESCRIPTION	PRICE/BAHT
001	231433-0	COMPRESSION SPRING 4	50
001	126233-0	SPEED CHANGE LEVER ASSEMBLY	90
002	187359-3	HOUSING SET	660
004	266429-2	TAPPING SCREW 3X16	50
006	232239-9	LEAF SPRING	50
007	450504-6	F/R CHANGE LEVER	50
008	650691-3	SWITCH C3HW-3A-EF1M	2,170
009	345998-7	SET PLATE	50
010	643830-2	TERMINAL	130
014	251468-5	- FLAT HEAD SCREW M6X22	100
015	766003-1	KEYLESS DRILL CHUCK 10	960
016	126148-1	GEAR ASSEMBLY	2,670
017	629962-9	DC MOTOR	730
018	911003-8	PAN HEAD SCREW M3X6	100
019	187359-3	HOUSING SET	660
A01	168467-9	HOLSTER	270
A02	194588-1	DC10WA BATTERY CHARGER	3,150
A03	194550-6	BATTERY BL1013 SET	5,450
A04	784203-1	PHILLIPS BIT 2-65	190
A06	417724-5	LATCH	100

SERVICE DRAWING

MODEL NO. HP457D

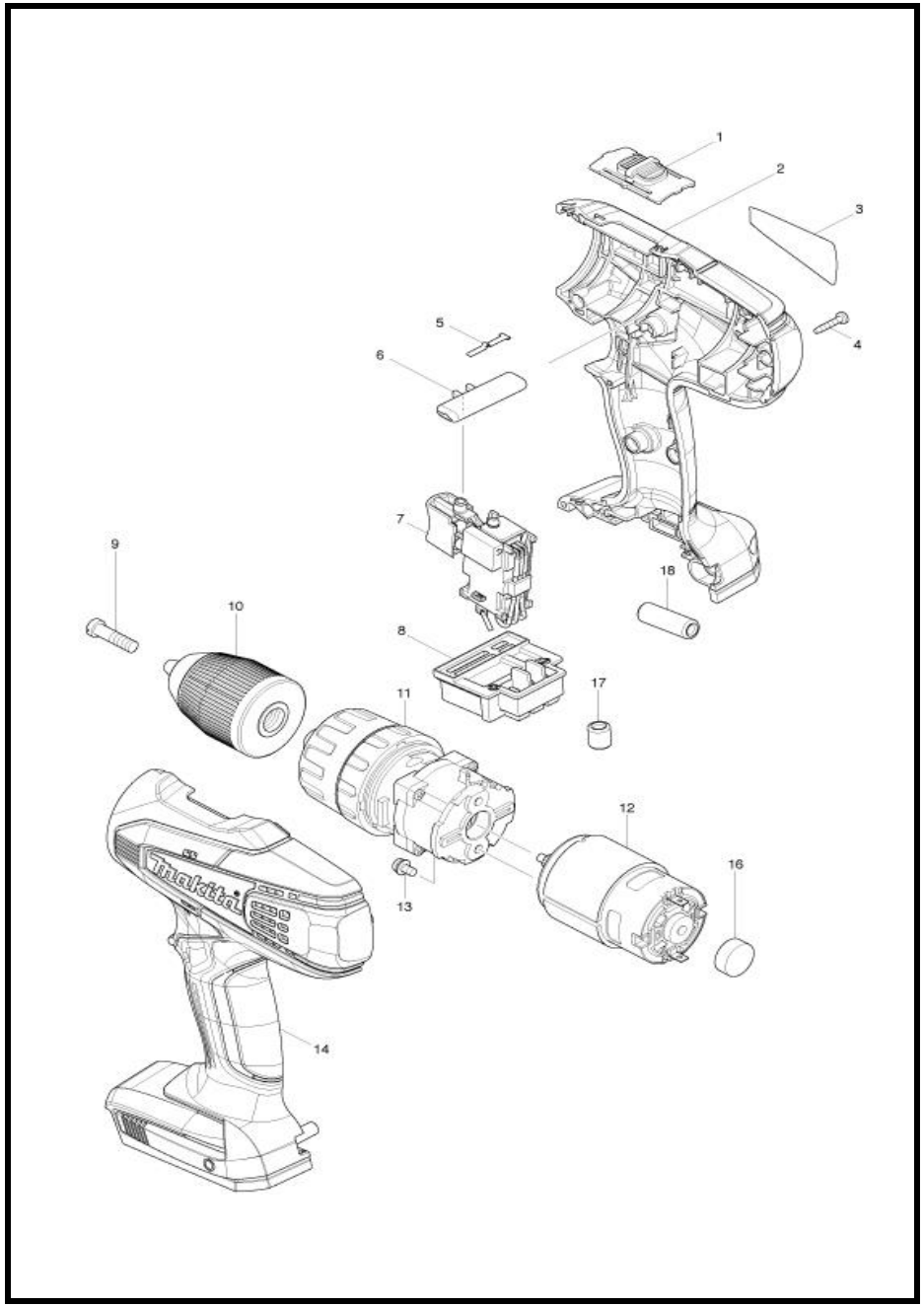

MODEL HP457D

ITEM	PARTS ID	DESCRIPTION	PRICE/BAHT
001	125310-5	SPEED CHANGE LEVER ASS'Y	130
001	231433-0	COMPRESSION SPRING 4	50
002	187026-0	HOUSING SET	930
004	266429-2	TAPPING SCREW 3X16	50
005	232182-2	LEAF SPRING	80
006	452399-3	F/R CHANGE LEVER	90
007	638887-6	SWITCH UNIT	1,310
008	643862-9	TERMINAL	250
009	251468-5	- FLAT HEAD SCREW M6X22	100
010	766004-9	KEYLESS DRILL CHUCK 13	1,230
011	125485-0	GEAR ASS'Y	2,280
012	629937-8	DC MOTOR	1,180
013	911108-4	PAN HEAD SCREW M4X8	20
014	187026-0	HOUSING SET	930
016	421940-3	CAP	50
A01	784636-0	+- BIT 2-65	160
A02	195423-6	DC18WA BATTRY CHARGER	
A03	196366-5	BATTERY BL1813G SET	4,240
A04	452652-7	BATTERY COVER	90
A05	452137-3	HANDLE	170
A05	162315-4	LATCH	170

SERVICE DRAWING

MODEL NO. HR1830

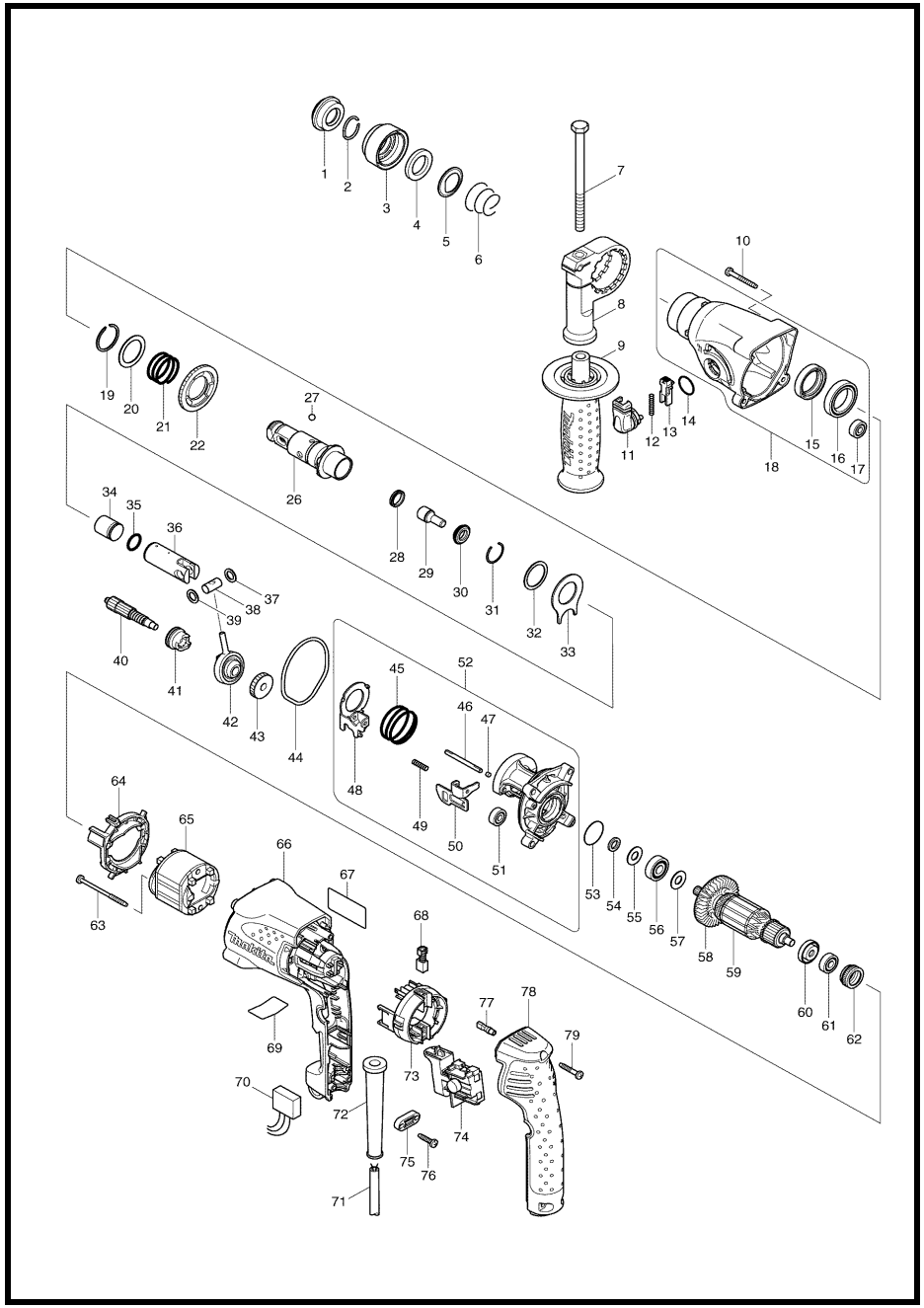

MODEL HR1830

ITEM	PARTS ID	DESCRIPTION	PRICE/BAHT
001	286263-4	CAP 35	110
002	233940-9	RING SPRING 19	60
003	419220-9	CHUCK COVER	170
004	257241-1	RING 21	130
005	345187-4	GUIDE WASHER	90
006	233916-6	CONICAL COMP. SPRING 21-29	30
007	921923-8	HEX. BOLT M8X120	80
008	417911-6	GRIP BASE	190
009	158057-6	GRIP 36 COMPLETE	350
010	266053-1	TAPPING SCREW 4X35	40
011	162242-5	CHANGE LEVER COMPLETE	130
012	233459-8	COMPRESSION SPRING 3	30
013	419192-8	LOCK BUTTON	80
014	213278-8	O RING 17	40
015	213535-4	OIL SEAL 25	120
016	211375-4	BALL BEARING 6805LLB	630
017	211012-0	BALL BEARING 606ZZ	230
018	154840-9	GEAR HOUSING COMPLETE	730
019	961135-1	RETAINING(EXT) WR-25	70
020	267304-5	FLAT WASHER 25	80
021	233457-2	COMPRESSION SPRING 25	60
022	331707-0	SPUR GEAR 46	790
026	154843-3	TOOL HOLDER COMPLETE	670
027	216022-2	STEEL BALL 7.0	20
028	213183-9	X RING 13	110
029	324611-0	IMPACT BOLT	150
030	257275-4	RING 11	180
031	233942-5	RING SPRING 22	90
032	267175-0	FLAT WASHER 24	60
033	345681-6	JOINT PLATE	90
034	324613-6	STRIKER	150
035	213182-1	O RING 14	110
036	331708-8	PISTON CYLINDER	550
037	267130-2	FLAT WASHER 9	40
038	324612-8	PISTON JOINT	130
039	267130-2	FLAT WASHER 9	40
040	227152-4	SPUR GEAR 10	490
041	331706-2	CLUTCH CAM	230
042	219019-0	SWASH BEARING 9	1,520
043	226620-4	HELICAL GEAR 23	320
044	423346-1	SEAL RING	80
045	233458-0	COMPRESSION SPRING 32	70
046	268147-8	PIN 4	110
047	443123-5	FELT 4X3	30
048	345645-0	CHANGE PLATE	230
049	233460-3	COMPRESSION SPRING 3	30
050	345654-9	STOPPER PLATE	180
051	211012-0	BALL BEARING 606ZZ	230
052	154841-7	INNER HOUSING COMPLETE	810
053	213953-6	O RING 24	40
054	267302-9	FLAT WASHER 9	50
055	267231-6	FLAT WASHER 9	30
056	210060-6	BALL BEARING 609LLU	300
057	267231-6	FLAT WASHER 9	30
059	515648-0	ARMATURE ASS'Y 220V	
060	681636-0	INSULATION WASHER	60
061	210017-7	BALL BEARING 607DDW	250
062	421868-5	LABYRINTH RUBBER RING 19	100
063	266091-3	TAPPING SCREW 4X50	40
064	419196-0	BAFFLE PLATE	130
065	633623-5	FIELD 220V	
066	419198-6	MOTOR HOUSING	610
068	B-80422	CARBON BRUSH SET CB-419A	
071	691015-4	POWER SUPPLY CORD 0.75-2-2.5	740
072	682566-8	CORD GUARD 10	80
073	638236-7	BRUSH HOLDER UNIT	420
074	650570-5	SWITCH TG843TB-2	1,150
075	687053-2	STRAIN RELIEF	70
076	265995-6	TAPPING SCREW 4X18	40
077	686038-5	RECEPTACLE SLEEVE	20
078	419197-8	HANDLE COVER	390
079	265999-8	TAPPING SCREW 4X25	30
A01	415486-9	DEPTH GAUGE	80

SERVICE DRAWING

MODEL NO. HR2021

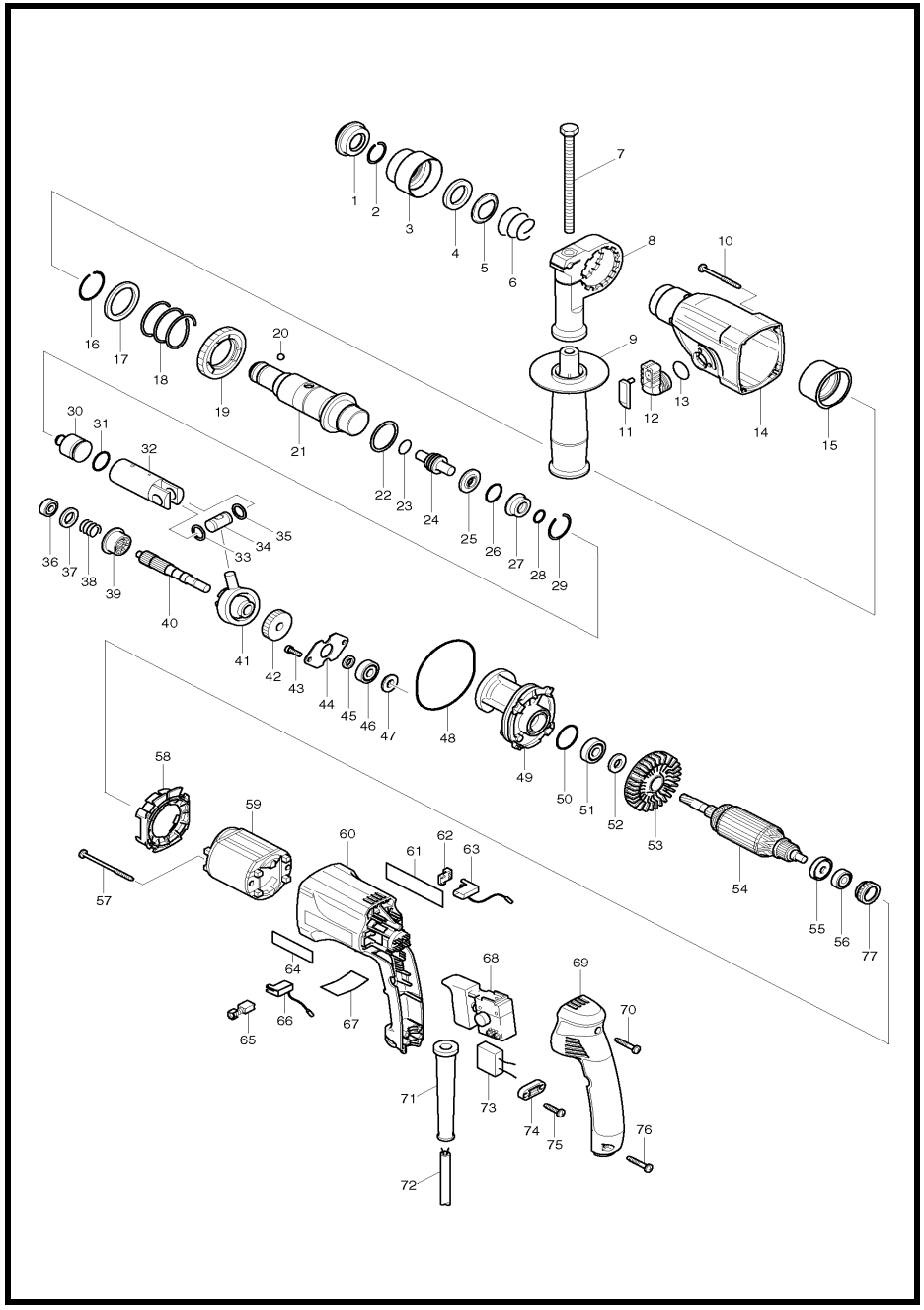

MODEL HR2021

ITEM	PARTS ID	DESCRIPTION	PRICE/BAHT
001	286263-4	CAP 35	110
002	233940-9	RING SPRING 19	60
003	417629-9	CHUCK COVER	110
004	257241-1	RING 21	130
005	345187-4	GUIDE WASHER	90
006	233916-6	CONICAL COMP. SPRING 21-29	30
007	921923-8	HEX. BOLT M8X120	80
008	417630-4	GRIP BASE	190
009	135302-6	GRIP 36 ASS'Y	290
010	266069-6	TAPPING SCREW 4X45	80
011	417628-1	CAP	80
012	184678-8	CHANGE LEVER ASS'Y	1,350
013	213278-8	O RING 17	40
014	183442-4	GEAR HOUSING SET	1,270
015	153290-5	NEEDLE BEARING COMPLETE	250
016	233918-2	RING SPRING 28	20
017	267228-5	WASHER 30	100
018	233328-3	COMPRESSION SPRING 31	80
019	227019-6	SPUR GEAR 51	460
020	216022-2	STEEL BALL 7.0	20
021	153288-2	TOOL HOLDER COMPLETE	3,200
022	267229-3	FLAT WASHER 28	70
023	213128-7	O RING 12	110
024	324278-4	IMPACT BOLT	500
025	324218-2	RING 9	200
026	213232-2	O RING 15	150
027	324216-6	O RING CASE	280
028	213073-6	O RING 9	110
029	233917-4	RING SPRING 28	40
030	324214-0	STRIKER	160
031	213227-5	O RING 16	100
032	317517-9	PISTON CYLINDER	460
033	267104-3	FLAT WASHER 12	40
034	324215-8	PISTON JOINT	180
035	267104-3	FLAT WASHER 12	40
036	211012-0	BALL BEARING 606ZZ	230
037	253744-3	FLAT WASHER 12	50
038	233347-9	COMPRESSION SPRING 12	40
039	324469-7	CLUTCH CAM	1,140
040	227029-3	SPUR GEAR 10	550
041	219014-0	SWASH BEARING 10	1,370
042	226550-9	HELICAL GEAR 26	360
043	266273-7	HEX. SOCKET HEAD BOLT M4X12	60
044	345179-3	BEARING RETAINER	70
045	267234-0	FLAT WASHER 8	40
046	211032-4	BALL BEARING 608ZZ	200
047	324212-4	RING 8	180
048	213725-9	O RING 68	130
049	153686-0	INNER HOUSING COMPLETE	620
050	213380-7	O RING 24	50
051	210060-6	BALL BEARING 609LLU	300
052	267231-6	FLAT WASHER 9	30
054	515668-4	ARMATURE ASS'Y 220-240V	

ITEM	PARTS ID	DESCRIPTION	PRICE/BAHT
055	681636-0	INSULATION WASHER	60
056	211021-9	BALL BEARING 607LLB	240
057	266052-3	TAPPING SCREW 4X60	100
058	419201-3	BAFFLE PLATE	80
059	633488-5	FIELD 220-240V	
060	418084-8	MOTOR HOUSING	690
062	689111-0	SPACER	90
063	643992-6	BRUSH HOLDER	500
064	819063-3	MAKITA LABEL	30
065	B-80422	CARBON BRUSH SET CB-419A	
066	643991-8	BRUSH HOLDER	150
068	651299-6	SWITCH TG813TB-1	1,380
069	153285-8	HANDLE COVER COMPLETE	590
070	265999-8	TAPPING SCREW 4X25	30
071	682566-8	CORD GUARD 10	80
072	691015-4	POWER SUPPLY CORD 0.75-2-2.5	740
074	687053-2	STRAIN RELIEF	70
075	265995-6	TAPPING SCREW 4X18	40
076	265999-8	TAPPING SCREW 4X25	30
077	421494-0	RUBBER RING 19	250
078	345280-4	HEX. WASHER	30
079	267271-4	FLAT WASHER 9	50
080	345362-2	STOPPER PLATE	180
080	345519-5	STOPPER PLATE	110
081	233388-5	COMPRESSION SPRING 5	30
082	961011-9	STOP RING E-4	20
A01	324219-0	DEPTH GAUGE	100

SERVICE DRAWING

MODEL NO. HR2230

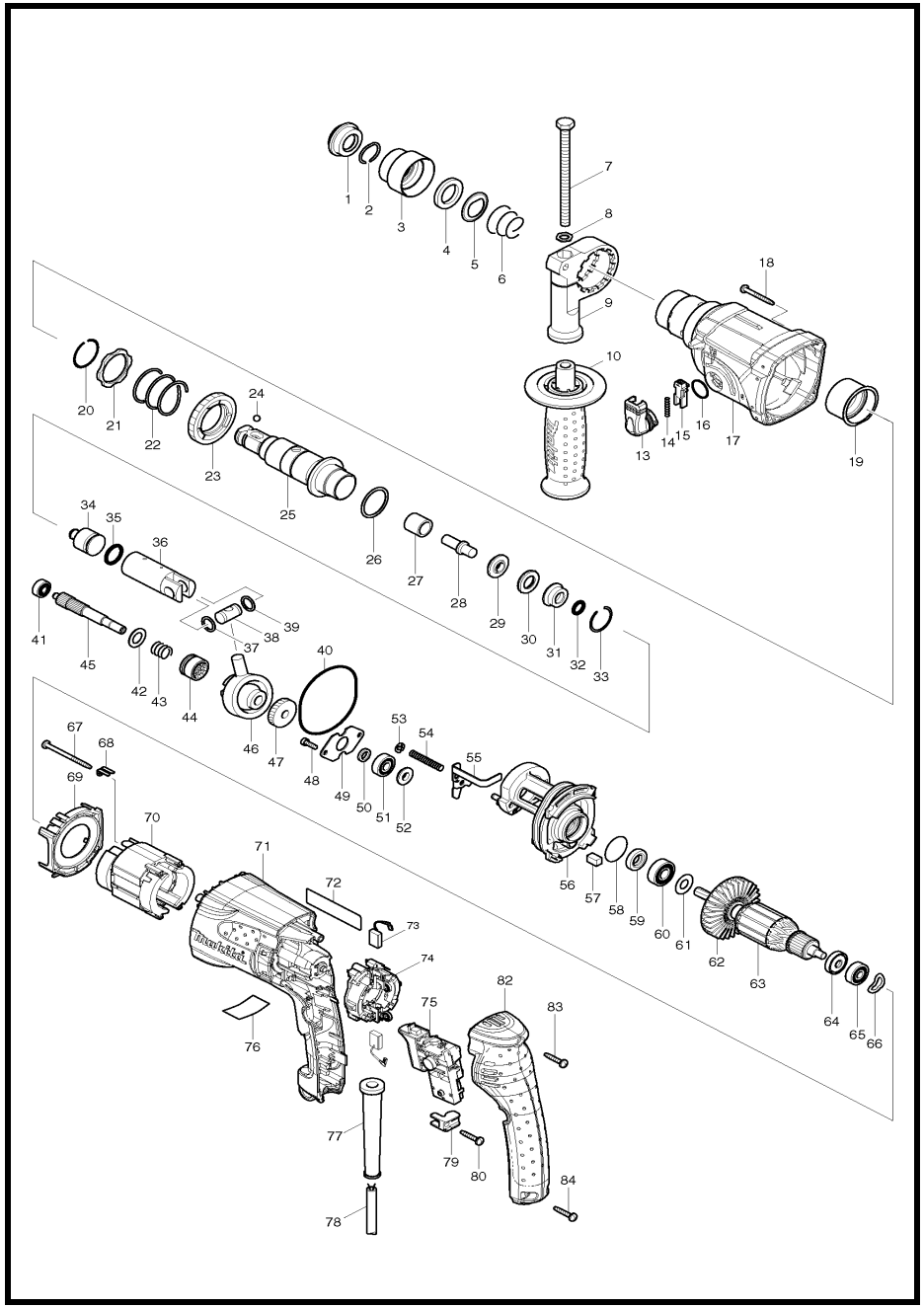

MODEL HR2230

ITEM	PARTS ID	DESCRIPTION	PRICE/BAHT
001	286263-4	CAP 35	110
002	233940-9	RING SPRING 19	60
003	417629-9	CHUCK COVER	110
004	257241-1	RING 21	130
005	345187-4	GUIDE WASHER	90
006	233916-6	CONICAL COMP. SPRING 21-29	30
007	921923-8	HEX. BOLT M8X120	80
008	345280-4	HEX. WASHER	30
009	417630-4	GRIP BASE	190
010	158057-6	GRIP 36 COMPLETE	350
013	162244-1	CHANGE LEVER	110
014	233459-8	COMPRESSION SPRING 3	30
015	419192-8	LOCK BUTTON	80
016	213278-8	O RING 17	40
017	158305-3	GEAR HOUSING COMPLETE	550
018	266351-3	TAPPING SCREW 4X35	30
019	153290-5	NEEDLE BEARING COMPLETE	250
020	233918-2	RING SPRING 28	20
021	267805-3	WASHER 30	80
022	233328-3	COMPRESSION SPRING 31	80
023	227019-6	SPUR GEAR 51	460
024	216022-2	STEEL BALL 7.0	20
025	158575-4	TOOL HOLDER COMPLETE	1,230
026	267229-3	FLAT WASHER 28	70
027	331769-8	SLEEVE 9	170
028	324669-9	IMPACT BOLT	160
029	324402-9	RING 10	150
030	421955-0	CUSHION RING 13	100
031	324216-6	O RING CASE	280
032	213073-6	O RING 9	110
033	233917-4	RING SPRING 28	40
034	324214-0	STRIKER	160
035	213227-5	O RING 16	100
036	317517-9	PISTON CYLINDER	460
037	267104-3	FLAT WASHER 12	40
038	324215-8	PISTON JOINT	180
039	267104-3	FLAT WASHER 12	40
040	213727-5	O-RING 63	200
041	211012-0	BALL BEARING 606ZZ	230
042	267212-0	FLAT WASHER 12	30
043	233347-9	COMPRESSION SPRING 12	40
044	331734-7	CLUTCH CAM	230
045	227182-5	SPUR GEAR 10	980
046	219014-0	SWASH BEARING 10	1,370
047	226656-3	HELICAL GEAR 26	300
048	266273-7	HEX. SOCKET HEAD BOLT M4X12	60
049	345179-3	BEARING RETAINER	70
050	267234-0	FLAT WASHER 8	40
051	211032-4	BALL BEARING 608ZZ	200
052	324212-4	RING 8	180
053	961011-9	STOP RING E-4	20
054	233388-5	COMPRESSION SPRING 5	30
055	346035-0	CHANGE PLATE	130
056	141575-1	INNER HOUSING COMPLETE	380
057	443126-9	FELT	40
058	213407-3	O RING 26	40
059	213077-8	OIL SEAL 10	200
060	210059-1	BALL BEARING 6000DDW	300
061	267213-8	FLAT WASHER 10	50
063	515283-4	ARMATURE ASS'Y 220V	
065	210023-2	BALL BEARING 627DDW	210
066	267804-5	WAVE WASHER 15	40
067	266415-3	TAPPING SCREW 4X55	40
068	344871-8	RETAINER	80
069	419716-0	BUFFLE PLATE	90
070	626573-1	FIELD 220V	
071	419720-9	MOTOR HOUSING	460
073	195001-2	CARBON BRUSH SET CB-325	
074	638500-6	BRUSH HOLDER UNIT	440
075	650589-4	SWITCH C3VA-2L	900
077	682566-8	CORD GUARD 10	80
078	691015-4	POWER SUPPLY CORD 0.75-2-2.5	740
079	687261-5	STRAIN RELIEF	70
080	266324-6	TAPPING SCREW 4X22	30
082	419717-8	HANDLE COVER	310
083	266324-6	TAPPING SCREW 4X22	30
084	266324-6	TAPPING SCREW 4X22	30
A01	324219-0	DEPTH GAUGE	100

SERVICE DRAWING

MODEL NO. HR2441

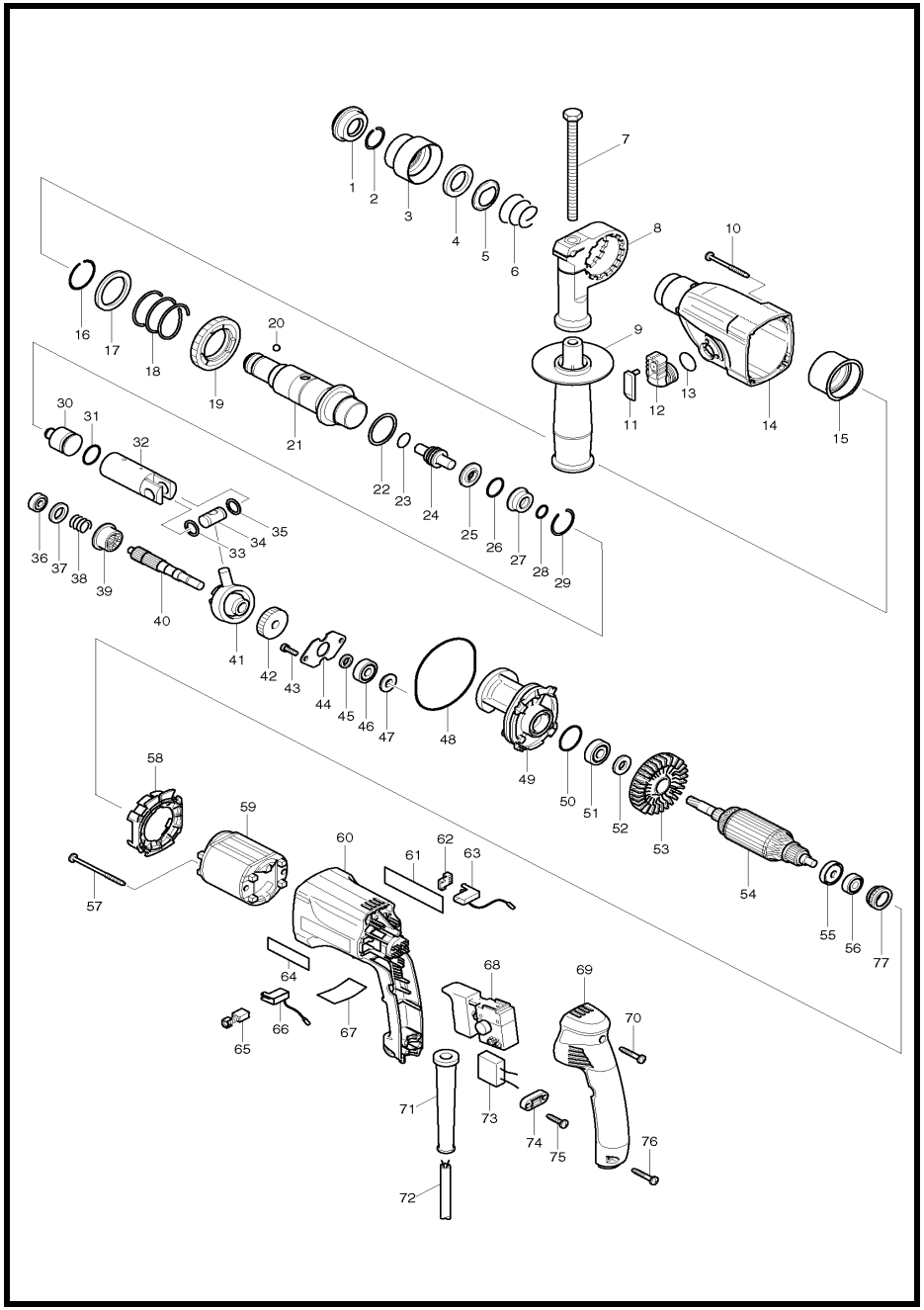

MODEL HR2441

ITEM	PARTS ID	DESCRIPTION	PRICE/BAHT
001	286263-4	CAP 35	110
002	233940-9	RING SPRING 19	60
003	417629-9	CHUCK COVER	110
004	257241-1	RING 21	130
005	345187-4	GUIDE WASHER	90
006	233916-6	CONICAL COMP. SPRING 21-29	30
007	921923-8	HEX. BOLT M8X120	80
008	417630-4	GRIP BASE	190
009	135302-6	GRIP 36 ASS'Y	290
010	266069-6	TAPPING SCREW 4X45	80
011	417628-1	CAP	80
012	184678-8	CHANGE LEVER ASS'Y	1,350
013	213278-8	O RING 17	40
014	183442-4	GEAR HOUSING SET	1,270
015	153290-5	NEEDLE BEARING COMPLETE	250
016	233918-2	RING SPRING 28	20
017	267228-5	WASHER 30	100
018	233328-3	COMPRESSION SPRING 31	80
019	227019-6	SPUR GEAR 51	460
020	216022-2	STEEL BALL 7.0	20
021	153288-2	TOOL HOLDER COMPLETE	3,200
022	267229-3	FLAT WASHER 28	70
023	213128-7	O RING 12	110
024	324278-4	IMPACT BOLT	500
025	324218-2	RING 9	200
026	213232-2	O RING 15	150
027	324216-6	O RING CASE	280
028	213073-6	O RING 9	110
029	233917-4	RING SPRING 28	40
030	324214-0	STRIKER	160
031	213227-5	O RING 16	100
032	317517-9	PISTON CYLINDER	460
033	267104-3	FLAT WASHER 12	40
034	324215-8	PISTON JOINT	180
035	267104-3	FLAT WASHER 12	40
036	211012-0	BALL BEARING 606ZZ	230
037	253744-3	FLAT WASHER 12	50
038	233347-9	COMPRESSION SPRING 12	40
039	324469-7	CLUTCH CAM	1,140
040	227029-3	SPUR GEAR 10	550
041	219014-0	SWASH BEARING 10	1,370
042	226550-9	HELICAL GEAR 26	360
043	266273-7	HEX. SOCKET HEAD BOLT M4X12	60
044	345179-3	BEARING RETAINER	70
045	267234-0	FLAT WASHER 8	40
046	211032-4	BALL BEARING 608ZZ	200
047	324212-4	RING 8	180
048	213725-9	O RING 68	130
049	153686-0	INNER HOUSING COMPLETE	620
050	213380-7	O RING 24	50
051	210060-6	BALL BEARING 609LLU	300
052	267231-6	FLAT WASHER 9	30
054	515663-4	ARMATURE ASS'Y 220V	
055	681636-0	INSULATION WASHER	60
056	211021-9	BALL BEARING 607LLB	240
057	266052-3	TAPPING SCREW 4X60	100
058	419201-3	BAFFLE PLATE	80
059	633493-2	FIELD 220V	
060	418084-8	MOTOR HOUSING	690
062	689111-0	SPACER	90
063	643992-6	BRUSH HOLDER	500
065	B-80422	CARBON BRUSH SET CB-419A	
066	643991-8	BRUSH HOLDER	150
068	651299-6	SWITCH TG813TB-1	1,380
069	153284-0	HANDLE COVER COMPLETE	720
070	265999-8	TAPPING SCREW 4X25	30
071	682566-8	CORD GUARD 10	80
072	691015-4	POWER SUPPLY CORD 0.75-2-2.5	740
074	687053-2	STRAIN RELIEF	70
075	265995-6	TAPPING SCREW 4X18	40
076	265999-8	TAPPING SCREW 4X25	30
077	421494-0	RUBBER RING 19	250
078	345280-4	HEX. WASHER	30
079	267271-4	FLAT WASHER 9	50
080	345519-5	STOPPER PLATE	110
081	233388-5	COMPRESSION SPRING 5	30
082	961011-9	STOP RING E-4	20
A01	324219-0	DEPTH GAUGE	100

SERVICE DRAWING

MODEL NO. HR2450T

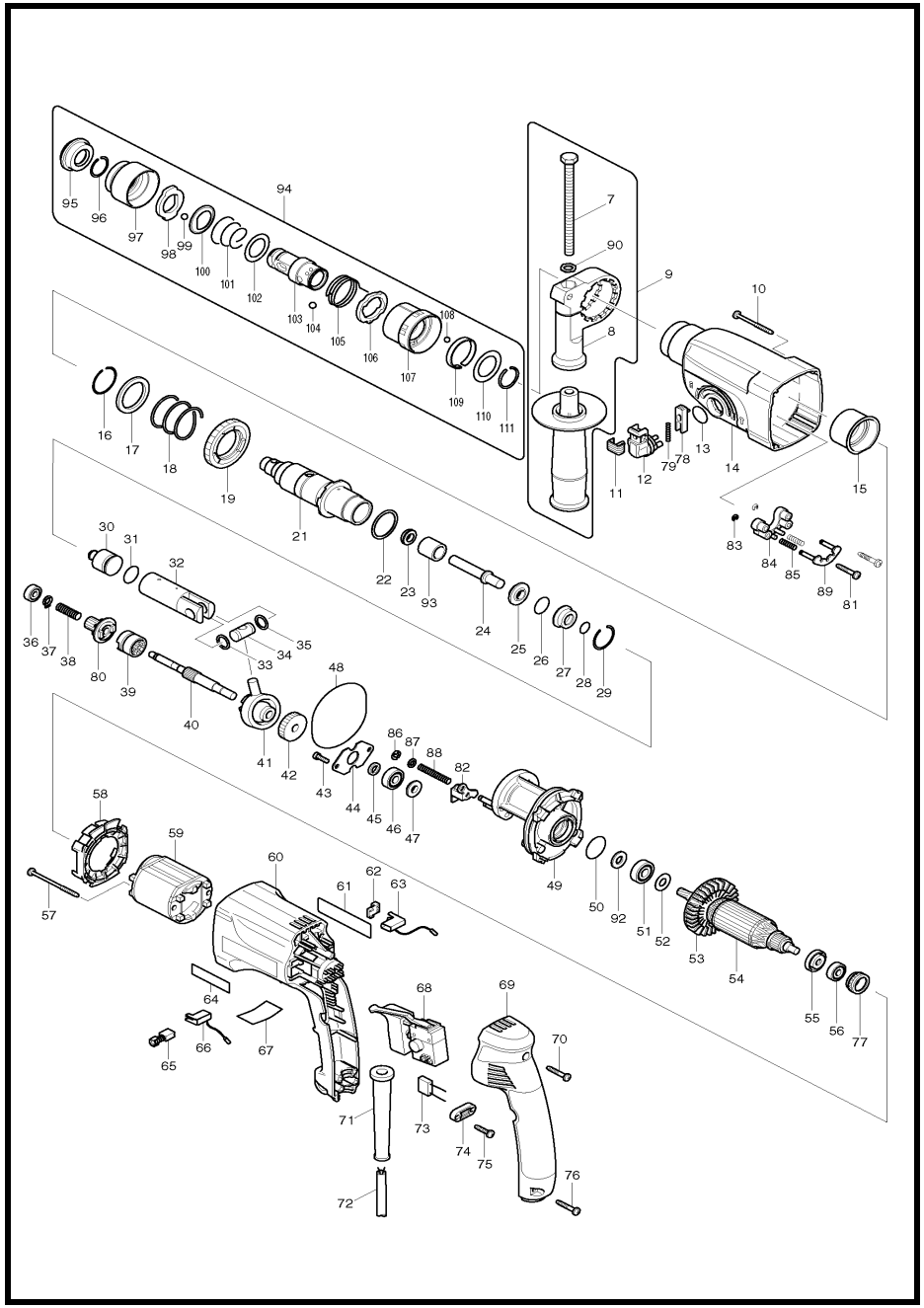

MODEL HR2450T

ITEM	PARTS ID	DESCRIPTION	PRICE/BAHT
007	921923-8	HEX. BOLT M8X120	80
008	417630-4	GRIP BASE	190
009	135302-6	GRIP 36 ASS'Y	290
010	266069-6	TAPPING SCREW 4X45	80
011	417794-4	CAP	60
012	162229-7	CHANGE LEVER COMPLETE	170
013	213278-8	O RING 17	40
014	183441-6	GEAR HOUSING SET	1,330
015	153290-5	NEEDLE BEARING COMPLETE	250
016	233929-7	RING SPRING 29	40
017	267782-9	WASHER 31	90
018	233401-9	COMPRESSION SPRING 32	100
019	227109-5	SPUR GEAR 51	730
021	153696-7	TOOL HOLDER GUIDE COMPLETE	1,630
022	267229-3	FLAT WASHER 28	70
023	213074-4	X RING 9	100
024	324400-3	IMPACT BOLT	190
025	324402-9	RING 10	150
026	213232-2	O RING 15	150
027	324216-6	O RING CASE	280
028	213073-6	O RING 9	110
029	233917-4	RING SPRING 28	40
030	324214-0	STRIKER	160
031	213227-5	O RING 16	100
032	331632-5	PISTON CYLINDER	1,540
033	267104-3	FLAT WASHER 12	40
034	324215-8	PISTON JOINT	180
035	267104-3	FLAT WASHER 12	40
036	211012-0	BALL BEARING 606ZZ	230
037	961003-8	RETAINING RING S-7	20
038	233343-7	COMPRESSION SPRING 7	40
039	331993-3	CLUTCH CAM	500
040	324248-3	CAM SHAFT	820
041	219014-0	SWASH BEARING 10	1,370
042	226550-9	HELICAL GEAR 26	360
043	266273-7	HEX. SOCKET HEAD BOLT M4X12	60
044	345179-3	BEARING RETAINER	70
045	267234-0	FLAT WASHER 8	40
046	211032-4	BALL BEARING 608ZZ	200
047	324212-4	RING 8	180
048	213725-9	O RING 68	130
049	153687-8	INNER HOUSING COMPLETE	640
050	213380-7	O RING 24	50
051	210060-6	BALL BEARING 609LLU	300
052	267231-6	FLAT WASHER 9	30
054	515663-4	ARMATURE ASS'Y 220V	
055	681636-0	INSULATION WASHER	60
056	211021-9	BALL BEARING 607LLB	240
057	266052-3	TAPPING SCREW 4X60	100
058	419201-3	BAFFLE PLATE	80
059	633493-2	FIELD 220V	
060	418084-8	MOTOR HOUSING	690
062	689111-0	SPACER	90

ITEM	PARTS ID	DESCRIPTION	PRICE/BAHT
063	643988-7	BRUSH HOLDER	150
065	B-80422	CARBON BRUSH SET CB-419A	
066	643989-5	BRUSH HOLDER	150
068	650508-0	SWITCH TG813TLB-1	1,440
069	153284-0	HANDLE COVER COMPLETE	720
070	265999-8	TAPPING SCREW 4X25	30
071	682566-8	CORD GUARD 10	80
072	691015-4	POWER SUPPLY CORD 0.75-2-2.5	740
074	687053-2	STRAIN RELIEF	70
075	265995-6	TAPPING SCREW 4X18	40
076	265999-8	TAPPING SCREW 4X25	30
077	421494-0	RUBBER RING 19	250
078	417795-2	LOCK BUTTON	60
079	233341-1	COMPRESSION SPRING 3	50
080	226399-7	SPUR GEAR 10	1,520
081	265999-8	TAPPING SCREW 4X25	30
082	345363-0	CHANGE PLATE	150
083	961017-7	STOP RING E-3	20
084	417796-0	GUIDE BASE	90
085	233344-5	COMPRESSION SPRING 4	40
086	961011-9	STOP RING E-4	20
087	941102-2	FLAT WASHER 5	30
088	233342-9	COMPRESSION SPRING 6	40
089	163430-7	LOCK PLATE COMPLETE	150
090	345280-4	HEX. WASHER	30
092	267271-4	FLAT WASHER 9	50
093	324401-1	SLEEVE 9	160
094	194080-7	TOOL HOLDER SET	3,060
095	286263-4	CAP 35	110
096	233940-9	RING SPRING 19	60
097	418217-5	CHUCK COVER	140
098	345333-9	STOPPER	110
099	216022-2	STEEL BALL 7.0	20
100	345187-4	GUIDE WASHER	90
101	233916-6	CONICAL COMP. SPRING 21-29	30
102	267279-8	FLAT WASHER 21	50
103	324355-2	TOOL HOLDER	1,780
104	216013-3	STEEL BALL 6	50
105	231669-1	TORSION SPRING 31	60
106	345334-7	CHANGE RING	160
107	418218-3	CHANGE COVER	130
108	216018-3	STEEL BALL 5.0	20
109	345335-5	LEAF SPRING	80
110	267270-6	FLAT WASHER 24	80
111	233924-7	RING SPRING 21	50
A01	324219-0	DEPTH GAUGE	100

SERVICE DRAWING

MODEL NO. HR2451

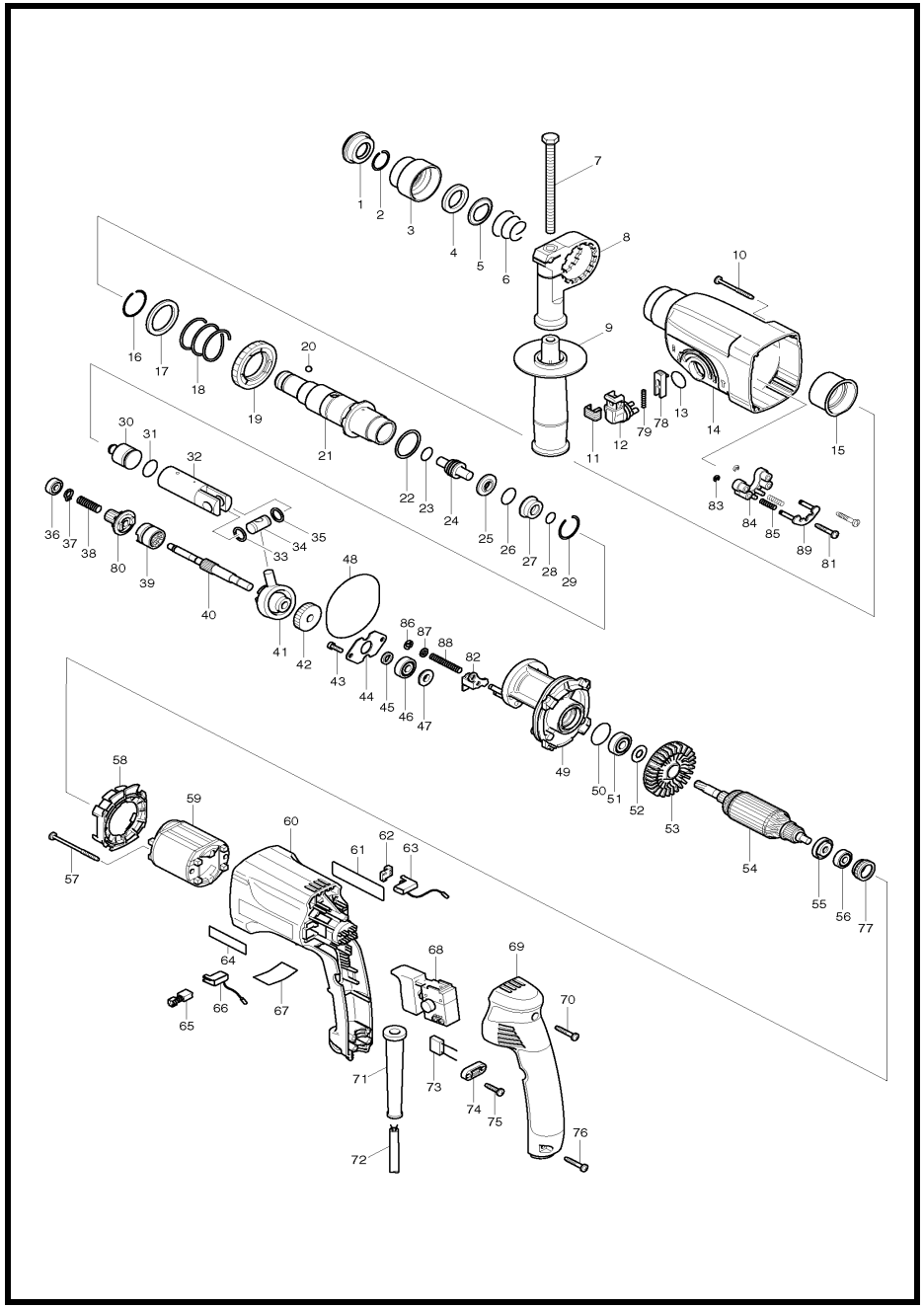

MODEL HR2451

ITEM	PARTS ID	DESCRIPTION	PRICE/BAHT
001	286263-4	CAP 35	110
002	233940-9	RING SPRING 19	60
003	417629-9	CHUCK COVER	110
004	257241-1	RING 21	130
005	345187-4	GUIDE WASHER	90
006	233916-6	CONICAL COMP. SPRING 21-29	30
007	921923-8	HEX. BOLT M8X120	80
008	417630-4	GRIP BASE	190
009	135302-6	GRIP 36 ASS'Y	290
010	266069-6	TAPPING SCREW 4X45	80
011	417794-4	CAP	60
012	162229-7	CHANGE LEVER COMPLETE	170
013	213278-8	O RING 17	40
014	183441-6	GEAR HOUSING SET	1,330
015	153290-5	NEEDLE BEARING COMPLETE	250
016	233918-2	RING SPRING 28	20
017	267228-5	WASHER 30	100
018	233328-3	COMPRESSION SPRING 31	80
019	227028-5	SPUR GEAR 51	720
020	216022-2	STEEL BALL 7.0	20
021	153365-0	TOOL HOLDER COMPLETE	3,370
022	267229-3	FLAT WASHER 28	70
023	213128-7	O RING 12	110
024	324396-8	IMPACT BOLT	560
025	324218-2	RING 9	200
026	213232-2	O RING 15	150
027	324216-6	O RING CASE	280
028	213073-6	O RING 9	110
029	233917-4	RING SPRING 28	40
030	324214-0	STRIKER	160
031	213227-5	O RING 16	100
032	331632-5	PISTON CYLINDER	1,540
033	267104-3	FLAT WASHER 12	40
034	324215-8	PISTON JOINT	180
035	267104-3	FLAT WASHER 12	40
036	211012-0	BALL BEARING 606ZZ	230
037	961003-8	RETAINING RING S-7	20
038	233343-7	COMPRESSION SPRING 7	40
039	331993-3	CLUTCH CAM	500
040	324248-3	CAM SHAFT	820
041	219014-0	SWASH BEARING 10	1,370
042	226550-9	HELICAL GEAR 26	360
043	266273-7	HEX. SOCKET HEAD BOLT M4X12	60
044	345179-3	BEARING RETAINER	70
045	267234-0	FLAT WASHER 8	40
046	211032-4	BALL BEARING 608ZZ	200
047	324212-4	RING 8	180
048	213725-9	O RING 68	130
049	153687-8	INNER HOUSING COMPLETE	640
050	213380-7	O RING 24	50
051	210060-6	BALL BEARING 609LLU	300
052	267231-6	FLAT WASHER 9	30
054	515663-4	ARMATURE ASS'Y 220V	
055	681636-0	INSULATION WASHER	60
056	211021-9	BALL BEARING 607LLB	240
057	266052-3	TAPPING SCREW 4X60	100
058	417631-2	BAFFLE PLATE	100
058	419201-3	BAFFLE PLATE	80
059	633493-2	FIELD 220V	
060	418084-8	MOTOR HOUSING	690
062	689111-0	SPACER	90
063	643991-8	BRUSH HOLDER	150
065	B-80422	CARBON BRUSH SET CB-419A	
066	643992-6	BRUSH HOLDER	500
068	651299-6	SWITCH TG813TB-1	1,380
069	153284-0	HANDLE COVER COMPLETE	720
070	265999-8	TAPPING SCREW 4X25	30
071	682566-8	CORD GUARD 10	80
072	691015-4	POWER SUPPLY CORD 0.75-2-2.5	740
074	687053-2	STRAIN RELIEF	70
075	265995-6	TAPPING SCREW 4X18	40
076	265999-8	TAPPING SCREW 4X25	30
077	421494-0	RUBBER RING 19	250
078	417795-2	LOCK BUTTON	60
079	233341-1	COMPRESSION SPRING 3	50
080	226399-7	SPUR GEAR 10	1,520
081	265999-8	TAPPING SCREW 4X25	30
082	345363-0	CHANGE PLATE	150
083	961017-7	STOP RING E-3	20
084	417796-0	GUIDE BASE	90
085	233344-5	COMPRESSION SPRING 4	40
086	961011-9	STOP RING E-4	20
087	941102-2	FLAT WASHER 5	30
088	233342-9	COMPRESSION SPRING 6	40
089	163430-7	LOCK PLATE COMPLETE	150
090	345280-4	HEX. WASHER	30
091	267271-4	FLAT WASHER 9	50
A01	324219-0	DEPTH GAUGE	100
A03	194041-7	DRILL CHUCK SET	870

SERVICE DRAWING

MODEL NO. HR2453

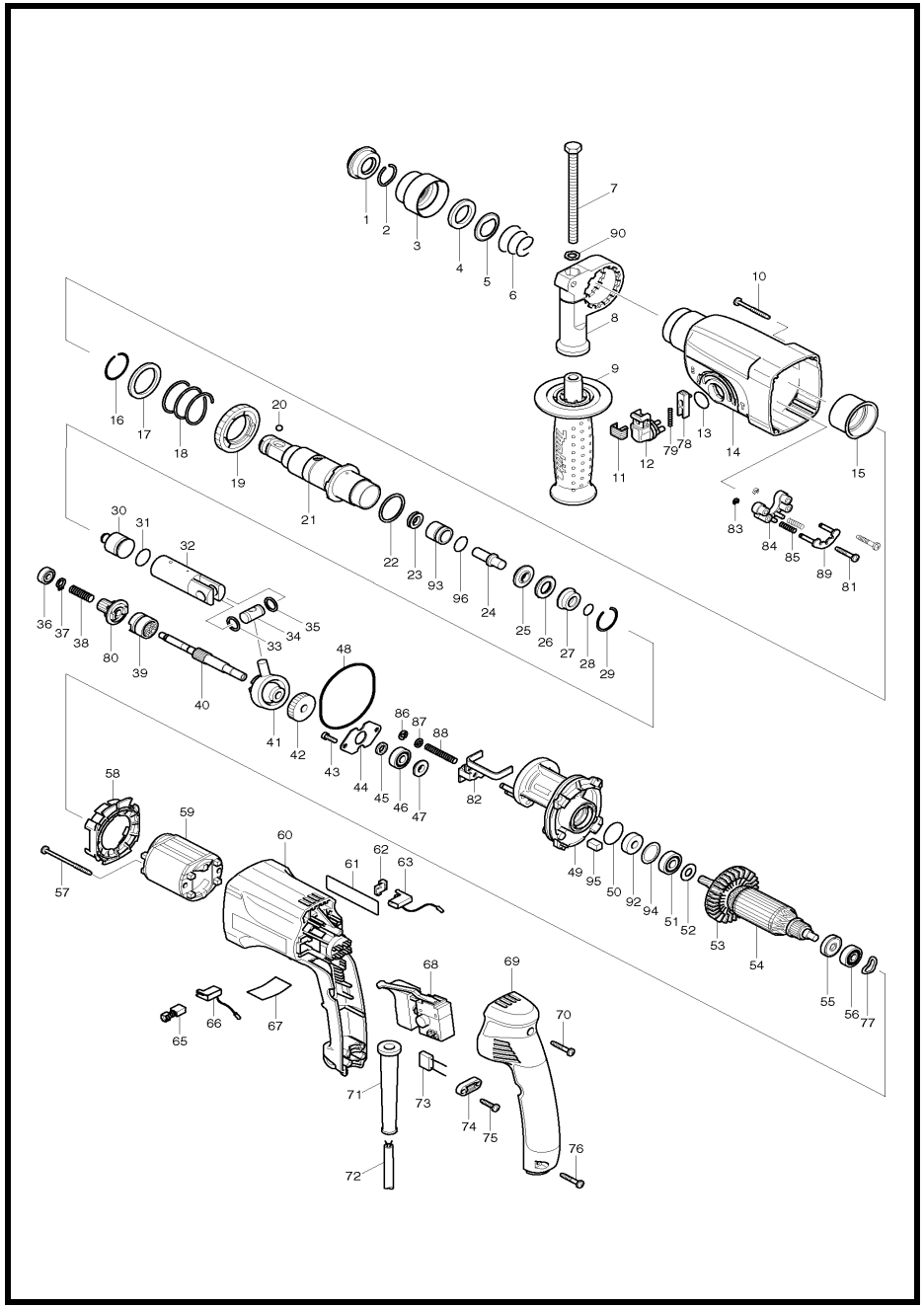

MODEL HR2453

ITEM	PARTS ID	DESCRIPTION	PRICE/BAHT
001	286263-4	CAP 35	110
002	233940-9	RING SPRING 19	60
003	417629-9	CHUCK COVER	110
004	257241-1	RING 21	130
005	345187-4	GUIDE WASHER	90
006	233916-6	CONICAL COMP. SPRING 21-29	30
007	921923-8	HEX. BOLT M8X120	80
008	417630-4	GRIP BASE	190
009	158057-6	GRIP 36 COMPLETE	350
010	266048-4	TAPPING SCREW 4X40	60
011	417794-4	CAP	60
012	162229-7	CHANGE LEVER COMPLETE	170
013	213278-8	O RING 17	40
014	154880-7	GEAR HOUSING COMPLETE	700
015	153290-5	NEEDLE BEARING COMPLETE	250
016	233929-7	RING SPRING 29	40
017	267460-1	WASHER 31	140
018	233401-9	COMPRESSION SPRING 32	100
019	227109-5	SPUR GEAR 51	730
020	216022-2	STEEL BALL 7.0	20
021	154890-4	TOOL HOLDER COMPLETE	1,660
022	267229-3	FLAT WASHER 28	70
023	213075-2	X-RING 9	90
024	324669-9	IMPACT BOLT	160
025	324402-9	RING 10	150
026	421955-0	CUSHION RING 13	100
027	324216-6	O RING CASE	280
028	213073-6	O RING 9	110
029	233917-4	RING SPRING 28	40
030	324214-0	STRIKER	160
031	213227-5	O RING 16	100
032	331632-5	PISTON CYLINDER	1,540
033	267104-3	FLAT WASHER 12	40
034	324215-8	PISTON JOINT	180
035	267104-3	FLAT WASHER 12	40
036	211012-0	BALL BEARING 606ZZ	230
037	961003-8	RETAINING RING S-7	20
038	233343-7	COMPRESSION SPRING 7	40
039	331993-3	CLUTCH CAM	500
040	324668-1	CAM SHAFT	380
041	219014-0	SWASH BEARING 10	1,370
042	226550-9	HELICAL GEAR 26	360
043	266273-7	HEX. SOCKET HEAD BOLT M4X12	60
044	345179-3	BEARING RETAINER	70
045	267234-0	FLAT WASHER 8	40
046	211032-4	BALL BEARING 608ZZ	200
047	324212-4	RING 8	180
048	213727-5	O-RING 63	200
049	141705-4	INNER HOUSING COMPLETE	950
050	213380-7	O RING 24	50
051	210051-7	BALL BEARING 609LLB	340
052	267231-6	FLAT WASHER 9	30
054	515683-8	ARMATURE ASS'Y 220V	
055	681652-2	INSULATION WASHER	60
056	210023-2	BALL BEARING 627DDW	210
057	266052-3	TAPPING SCREW 4X60	100
058	419201-3	BAFFLE PLATE	80
059	633493-2	FIELD 220V	
060	418084-8	MOTOR HOUSING	690
061	862275-7	HR2453 NAME PLATE	60
062	689111-0	SPACER	90
063	643988-7	BRUSH HOLDER	150
065	B-80422	CARBON BRUSH SET CB-419A	
066	643989-5	BRUSH HOLDER	150
068	650508-0	SWITCH TG813TLB-1	1,440
069	153284-0	HANDLE COVER COMPLETE	720
070	265999-8	TAPPING SCREW 4X25	30
071	682566-8	CORD GUARD 10	80
072	691015-4	POWER SUPPLY CORD 0.75-2-2.5	740
074	687053-2	STRAIN RELIEF	70
075	265995-6	TAPPING SCREW 4X18	40
076	265999-8	TAPPING SCREW 4X25	30
077	267721-9	WAVE WASHER 15	100
078	417795-2	LOCK BUTTON	60
079	233341-1	COMPRESSION SPRING 3	50
080	226399-7	SPUR GEAR 10	1,520
081	265999-8	TAPPING SCREW 4X25	30
082	345363-0	CHANGE PLATE	150
083	961017-7	STOP RING E-3	20
084	417796-0	GUIDE BASE	90
085	233344-5	COMPRESSION SPRING 4	40
086	961011-9	STOP RING E-4	20
087	941102-2	FLAT WASHER 5	30
088	233342-9	COMPRESSION SPRING 6	40
089	163430-7	LOCK PLATE COMPLETE	150
090	345280-4	HEX. WASHER	30
092	213964-1	OIL SEAL 8	480
093	324686-9	SLEEVE 9	300
094	253349-9	THIN WASHER 18	90
095	443126-9	FELT	40
096	213226-7	O RING 16	130
A01	324219-0	DEPTH GAUGE	100

SERVICE DRAWING

MODEL NO. HR2454

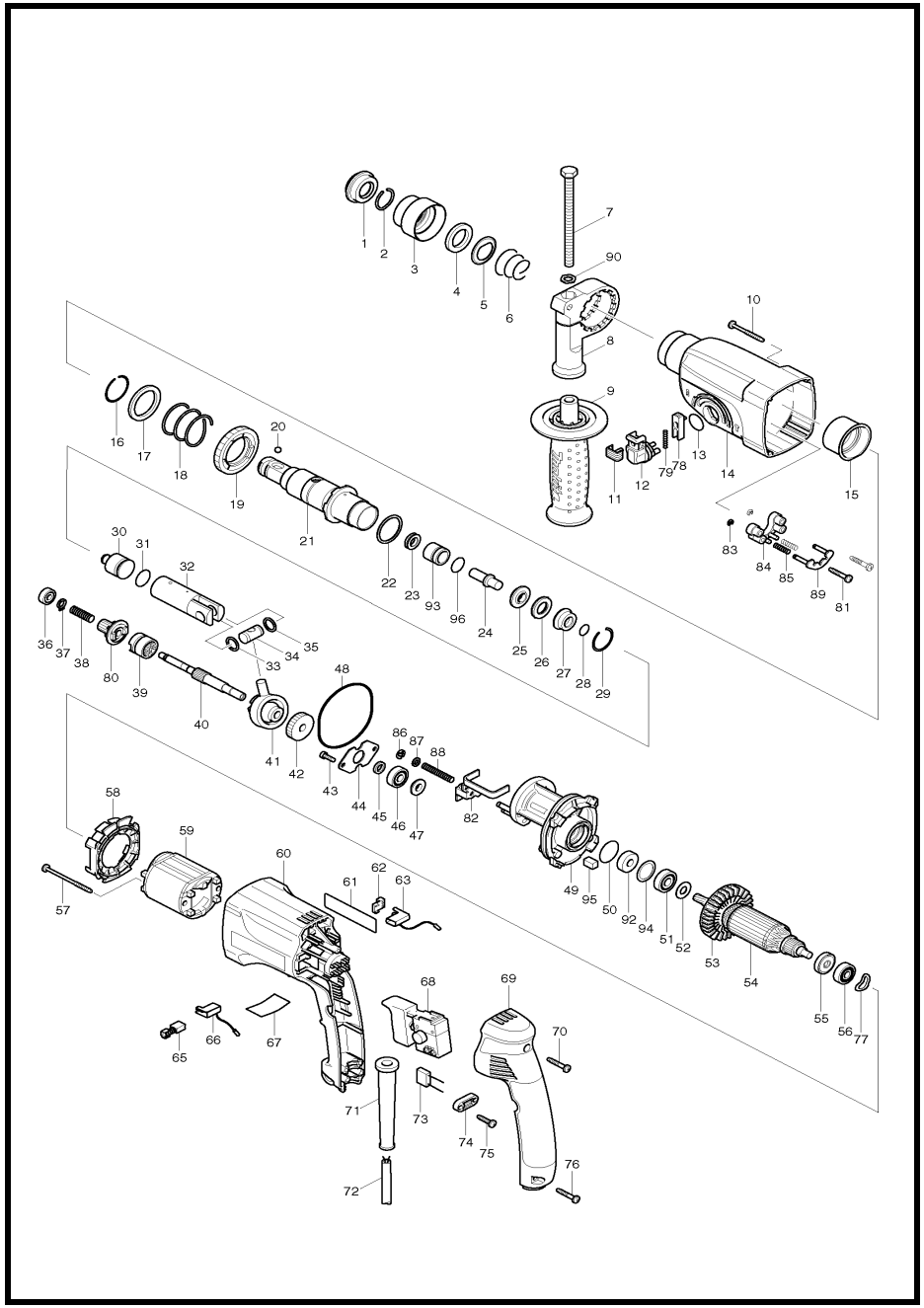

MODEL HR2454

ITEM	PARTS ID	DESCRIPTION	PRICE/BAHT
001	286263-4	CAP 35	110
002	233940-9	RING SPRING 19	60
003	417629-9	CHUCK COVER	110
004	257241-1	RING 21	130
005	345187-4	GUIDE WASHER	90
006	233916-6	CONICAL COMP. SPRING 21-29	30
007	921923-8	HEX. BOLT M8X120	80
008	417630-4	GRIP BASE	190
009	158057-6	GRIP 36 COMPLETE	350
010	266048-4	TAPPING SCREW 4X40	60
011	417794-4	CAP	60
012	162229-7	CHANGE LEVER COMPLETE	170
013	213278-8	O RING 17	40
014	154880-7	GEAR HOUSING COMPLETE	700
015	153290-5	NEEDLE BEARING COMPLETE	250
016	233929-7	RING SPRING 29	40
017	267460-1	WASHER 31	140
018	233401-9	COMPRESSION SPRING 32	100
019	227109-5	SPUR GEAR 51	730
020	216022-2	STEEL BALL 7.0	20
021	154890-4	TOOL HOLDER COMPLETE	1,660
022	267229-3	FLAT WASHER 28	70
023	213075-2	X-RING 9	90
024	324669-9	IMPACT BOLT	160
025	324402-9	RING 10	150
026	421955-0	CUSHION RING 13	100
027	324216-6	O RING CASE	280
028	213073-6	O RING 9	110
029	233917-4	RING SPRING 28	40
030	324214-0	STRIKER	160
031	213227-5	O RING 16	100
032	331632-5	PISTON CYLINDER	1,540
033	267104-3	FLAT WASHER 12	40
034	324215-8	PISTON JOINT	180
035	267104-3	FLAT WASHER 12	40
036	211012-0	BALL BEARING 606ZZ	230
037	961003-8	RETAINING RING S-7	20
038	233343-7	COMPRESSION SPRING 7	40
039	331993-3	CLUTCH CAM	500
040	324668-1	CAM SHAFT	380
041	219014-0	SWASH BEARING 10	1,370
042	226550-9	HELICAL GEAR 26	360
043	266273-7	HEX. SOCKET HEAD BOLT M4X12	60
044	345179-3	BEARING RETAINER	70
045	267234-0	FLAT WASHER 8	40
046	211032-4	BALL BEARING 608ZZ	200
047	324212-4	RING 8	180
048	213727-5	O-RING 63	200
049	141705-4	INNER HOUSING COMPLETE	950
050	213380-7	O RING 24	50
051	210051-7	BALL BEARING 609LLB	340
052	267231-6	FLAT WASHER 9	30
054	515683-8	ARMATURE ASS'Y 220V	
055	681652-2	INSULATION WASHER	60
056	210023-2	BALL BEARING 627DDW	210
057	266052-3	TAPPING SCREW 4X60	100
058	419201-3	BAFFLE PLATE	80
059	633493-2	FIELD 220V	
060	418084-8	MOTOR HOUSING	690
062	689111-0	SPACER	90
063	643992-6	BRUSH HOLDER	500
065	B-80422	CARBON BRUSH SET CB-419A	
066	643991-8	BRUSH HOLDER	150
068	651299-6	SWITCH TG813TB-1	1,380
069	153284-0	HANDLE COVER COMPLETE	720
070	265999-8	TAPPING SCREW 4X25	30
071	682566-8	CORD GUARD 10	80
072	691015-4	POWER SUPPLY CORD 0.75-2-2.5	740
074	687053-2	STRAIN RELIEF	70
075	265995-6	TAPPING SCREW 4X18	40
076	265999-8	TAPPING SCREW 4X25	30
077	267721-9	WAVE WASHER 15	100
078	417795-2	LOCK BUTTON	60
079	233341-1	COMPRESSION SPRING 3	50
080	226399-7	SPUR GEAR 10	1,520
081	265999-8	TAPPING SCREW 4X25	30
082	345363-0	CHANGE PLATE	150
083	961017-7	STOP RING E-3	20
084	417796-0	GUIDE BASE	90
085	233344-5	COMPRESSION SPRING 4	40
086	961011-9	STOP RING E-4	20
087	941102-2	FLAT WASHER 5	30
088	233342-9	COMPRESSION SPRING 6	40
089	163430-7	LOCK PLATE COMPLETE	150
090	345280-4	HEX. WASHER	30
092	213964-1	OIL SEAL 8	480
093	324686-9	SLEEVE 9	300
094	253349-9	THIN WASHER 18	90
095	443126-9	FELT	40
096	213226-7	O RING 16	130
A01	324219-0	DEPTH GAUGE	100

SERVICE DRAWING

MODEL NO. HR2460F

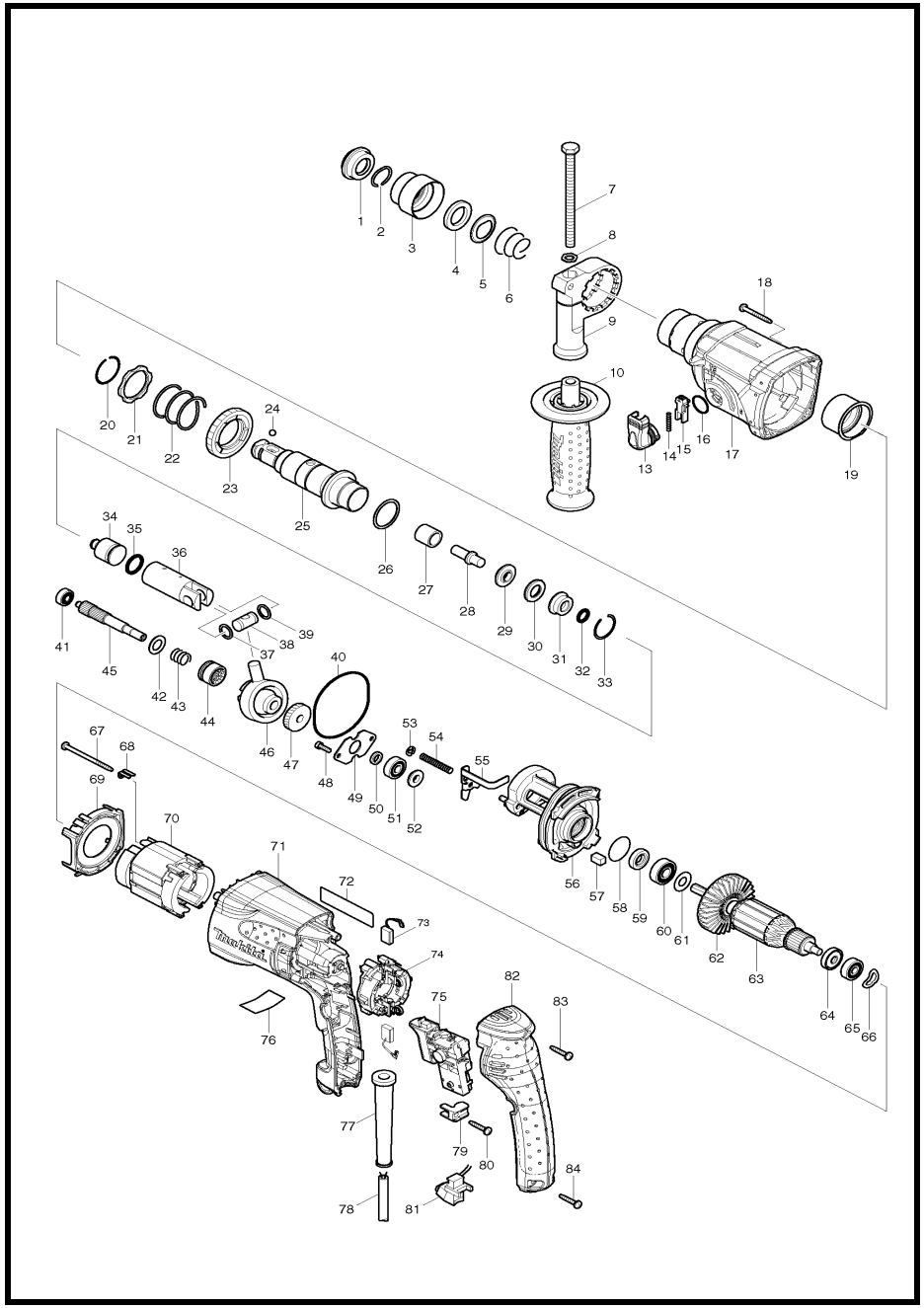

MODEL HR2460F

ITEM	PARTS ID	DESCRIPTION	PRICE/BAHT
001	286263-4	CAP 35	110
002	233940-9	RING SPRING 19	60
003	417629-9	CHUCK COVER	110
004	257241-1	RING 21	130
005	345187-4	GUIDE WASHER	90
006	233916-6	CONICAL COMP. SPRING 21-29	30
007	921923-8	HEX. BOLT M8X120	80
008	345280-4	HEX. WASHER	30
009	417630-4	GRIP BASE	190
010	158057-6	GRIP 36 COMPLETE	350
013	162244-1	CHANGE LEVER	110
014	233459-8	COMPRESSION SPRING 3	30
015	419192-8	LOCK BUTTON	80
016	213278-8	O RING 17	40
017	158305-3	GEAR HOUSING COMPLETE	550
018	266351-3	TAPPING SCREW 4X35	30
019	153290-5	NEEDLE BEARING COMPLETE	250
020	233918-2	RING SPRING 28	20
021	267805-3	WASHER 30	80
022	233328-3	COMPRESSION SPRING 31	80
023	227019-6	SPUR GEAR 51	460
024	216022-2	STEEL BALL 7.0	20
025	158575-4	TOOL HOLDER COMPLETE	1,230
026	267229-3	FLAT WASHER 28	70
027	331769-8	SLEEVE 9	170
028	324669-9	IMPACT BOLT	160
029	324402-9	RING 10	150
030	421955-0	CUSHION RING 13	100
031	324216-6	O RING CASE	280
032	213073-6	O RING 9	110
033	233917-4	RING SPRING 28	40
034	324733-6	STRIKER	160
035	213227-5	O RING 16	100
036	317517-9	PISTON CYLINDER	460
037	267104-3	FLAT WASHER 12	40
038	324215-8	PISTON JOINT	180
039	267104-3	FLAT WASHER 12	40
040	213727-5	O-RING 63	200
041	211012-0	BALL BEARING 606ZZ	230
042	267212-0	FLAT WASHER 12	30
043	233347-9	COMPRESSION SPRING 12	40
044	331734-7	CLUTCH CAM	230
045	227182-5	SPUR GEAR 10	980
046	219014-0	SWASH BEARING 10	1,370
047	226656-3	HELICAL GEAR 26	300
048	266273-7	HEX. SOCKET HEAD BOLT M4X12	60
049	345179-3	BEARING RETAINER	70
050	267234-0	FLAT WASHER 8	40
051	211032-4	BALL BEARING 608ZZ	200
052	324212-4	RING 8	180
053	961011-9	STOP RING E-4	20
054	233388-5	COMPRESSION SPRING 5	30
055	346035-0	CHANGE PLATE	130
056	158308-7	INNER HOUSING COMPLETE	380
057	443126-9	FELT	40
058	213407-3	O RING 26	40
059	213077-8	OIL SEAL 10	200
060	210059-1	BALL BEARING 6000DDW	300
061	267213-8	FLAT WASHER 10	50
063	515288-4	ARMATURE ASS'Y 220V	
064	681670-0	INSULATION WASHER	40
065	210023-2	BALL BEARING 627DDW	210
066	267804-5	WAVE WASHER 15	40
067	266334-3	TAPPING SCREW 4X60	30
068	344871-8	RETAINER	80
069	419716-0	BUFFLE PLATE	90
070	626578-1	FIELD 220V	
071	419718-6	MOTOR HOUSING	460
073	195001-2	CARBON BRUSH SET CB-325	
074	638500-6	BRUSH HOLDER UNIT	440
075	650589-4	SWITCH C3VA-2L	900
077	682566-8	CORD GUARD 10	80
078	691015-4	POWER SUPPLY CORD 0.75-2-2.5	740
079	687261-5	STRAIN RELIEF	70
080	266324-6	TAPPING SCREW 4X22	30
081	631746-3	LIGHT CIRCUIT	310
082	419717-8	HANDLE COVER	310
083	266324-6	TAPPING SCREW 4X22	30
084	266324-6	TAPPING SCREW 4X22	30
A01	324219-0	DEPTH GAUGE	100

SERVICE DRAWING

MODEL NO. HR2470F

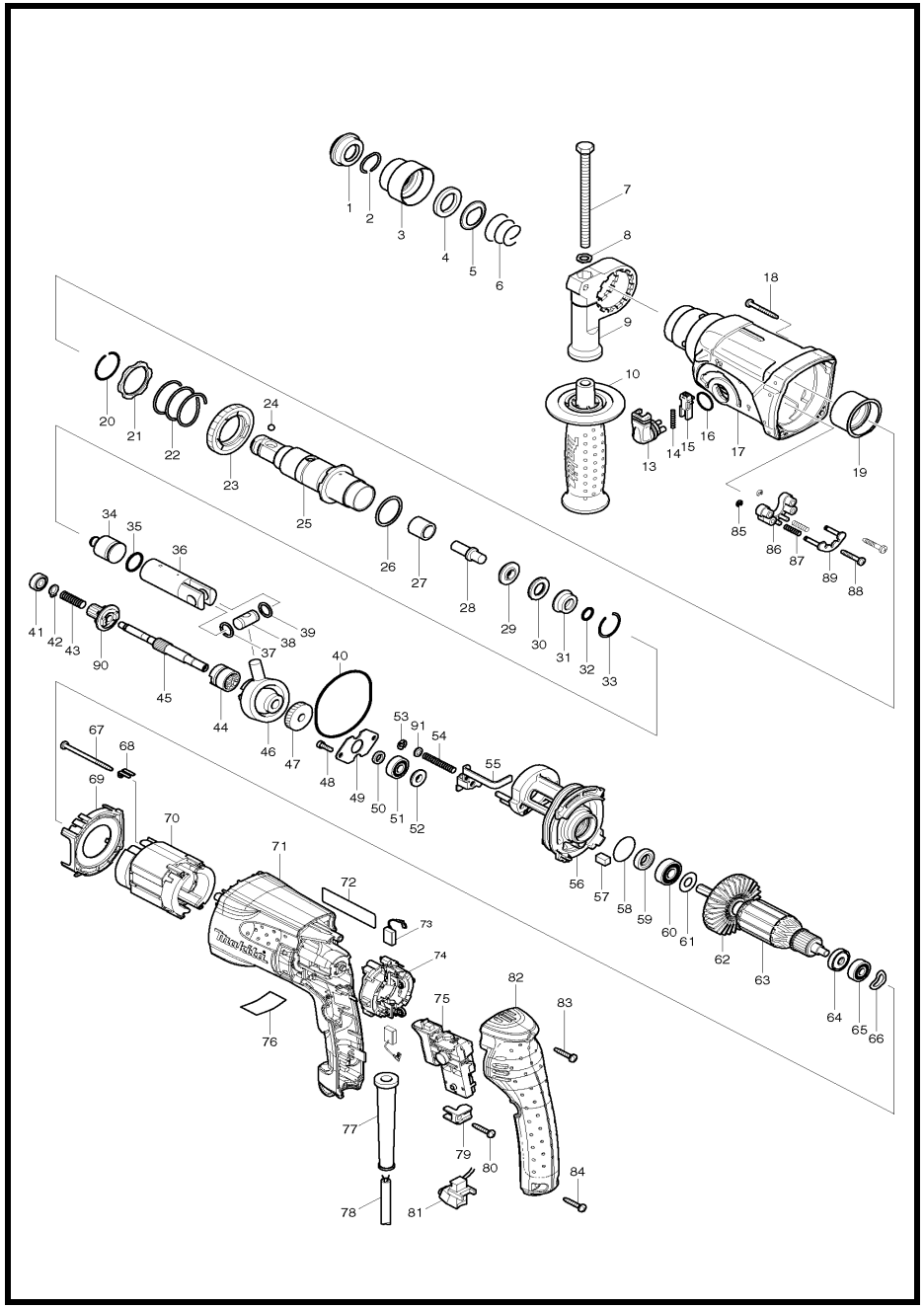

MODEL HR2470F

ITEM	PARTS ID	DESCRIPTION	PRICE/BAHT
001	286263-4	CAP 35	110
002	233940-9	RING SPRING 19	60
003	417629-9	CHUCK COVER	110
004	257241-1	RING 21	130
005	345187-4	GUIDE WASHER	90
006	233916-6	CONICAL COMP. SPRING 21-29	30
007	921923-8	HEX. BOLT M8X120	80
008	345280-4	HEX. WASHER	30
009	417630-4	GRIP BASE	190
010	158057-6	GRIP 36 COMPLETE	350
013	162245-9	CHANGE LEVER	130
014	233459-8	COMPRESSION SPRING 3	30
015	419192-8	LOCK BUTTON	80
016	213278-8	O RING 17	40
017	158216-2	GEAR HOUSING COMPLETE	610
018	266351-3	TAPPING SCREW 4X35	30
019	153290-5	NEEDLE BEARING COMPLETE	250
020	233929-7	RING SPRING 29	40
021	267460-1	WASHER 31	140
022	233401-9	COMPRESSION SPRING 32	100
023	227109-5	SPUR GEAR 51	730
024	216022-2	STEEL BALL 7.0	20
025	158574-6	TOOL HOLDER COMPLETE	
026	267229-3	FLAT WASHER 28	70
027	331769-8	SLEEVE 9	170
028	324669-9	IMPACT BOLT	160
029	324402-9	RING 10	150
030	421955-0	CUSHION RING 13	100
031	324216-6	O RING CASE	280
032	213073-6	O RING 9	110
033	233917-4	RING SPRING 28	40
034	324733-6	STRIKER	160
035	213227-5	O RING 16	100
036	318132-2	PISTON CYLINDER	460
037	267104-3	FLAT WASHER 12	40
038	324215-8	PISTON JOINT	180
039	267104-3	FLAT WASHER 12	40
040	213727-5	O-RING 63	200
041	211012-0	BALL BEARING 606ZZ	230
042	961003-8	RETAINING RING S-7	20
043	233343-7	COMPRESSION SPRING 7	40
044	331992-5	CLUTCH CAM	260
045	324668-1	CAM SHAFT	380
046	219014-0	SWASH BEARING 10	1,370
047	226656-3	HELICAL GEAR 26	300
048	266273-7	HEX. SOCKET HEAD BOLT M4X12	60
049	345179-3	BEARING RETAINER	70
050	267234-0	FLAT WASHER 8	40
051	211032-4	BALL BEARING 608ZZ	200
052	324212-4	RING 8	180
053	961011-9	STOP RING E-4	20
054	233342-9	COMPRESSION SPRING 6	40
055	345363-0	CHANGE PLATE	150
056	141574-3	INNER HOUSING COMPLETE	710
057	443126-9	FELT	40
058	213407-3	O RING 26	40
059	213077-8	OIL SEAL 10	200
060	210059-1	BALL BEARING 6000DDW	300
061	267213-8	FLAT WASHER 10	50
063	515288-4	ARMATURE ASS'Y 220V	
064	681670-0	INSULATION WASHER	40
065	210023-2	BALL BEARING 627DDW	210
066	267804-5	WAVE WASHER 15	40
067	266334-3	TAPPING SCREW 4X60	30
068	344871-8	RETAINER	80
069	419716-0	BUFFLE PLATE	90
070	626578-1	FIELD 220V	
071	419718-6	MOTOR HOUSING	460
073	195001-2	CARBON BRUSH SET CB-325	
074	638500-6	BRUSH HOLDER UNIT	440
075	650589-4	SWITCH C3VA-2L	900
077	682566-8	CORD GUARD 10	80
078	691015-4	POWER SUPPLY CORD 0.75-2-2.5	740
079	687261-5	STRAIN RELIEF	70
080	266324-6	TAPPING SCREW 4X22	30
081	631746-3	LIGHT CIRCUIT	310
082	419717-8	HANDLE COVER	310
083	266324-6	TAPPING SCREW 4X22	30
084	266324-6	TAPPING SCREW 4X22	30
085	961017-7	STOP RING E-3	20
086	417796-0	GUIDE BASE	90
087	233344-5	COMPRESSION SPRING 4	40
088	266374-1	TAPPING SCREW 4X25	30
089	163430-7	LOCK PLATE COMPLETE	150
090	227179-4	SPUR GEAR 10	900
091	941102-2	FLAT WASHER 5	30
A01	324219-0	DEPTH GAUGE	100

SERVICE DRAWING

MODEL NO. HR2470FT

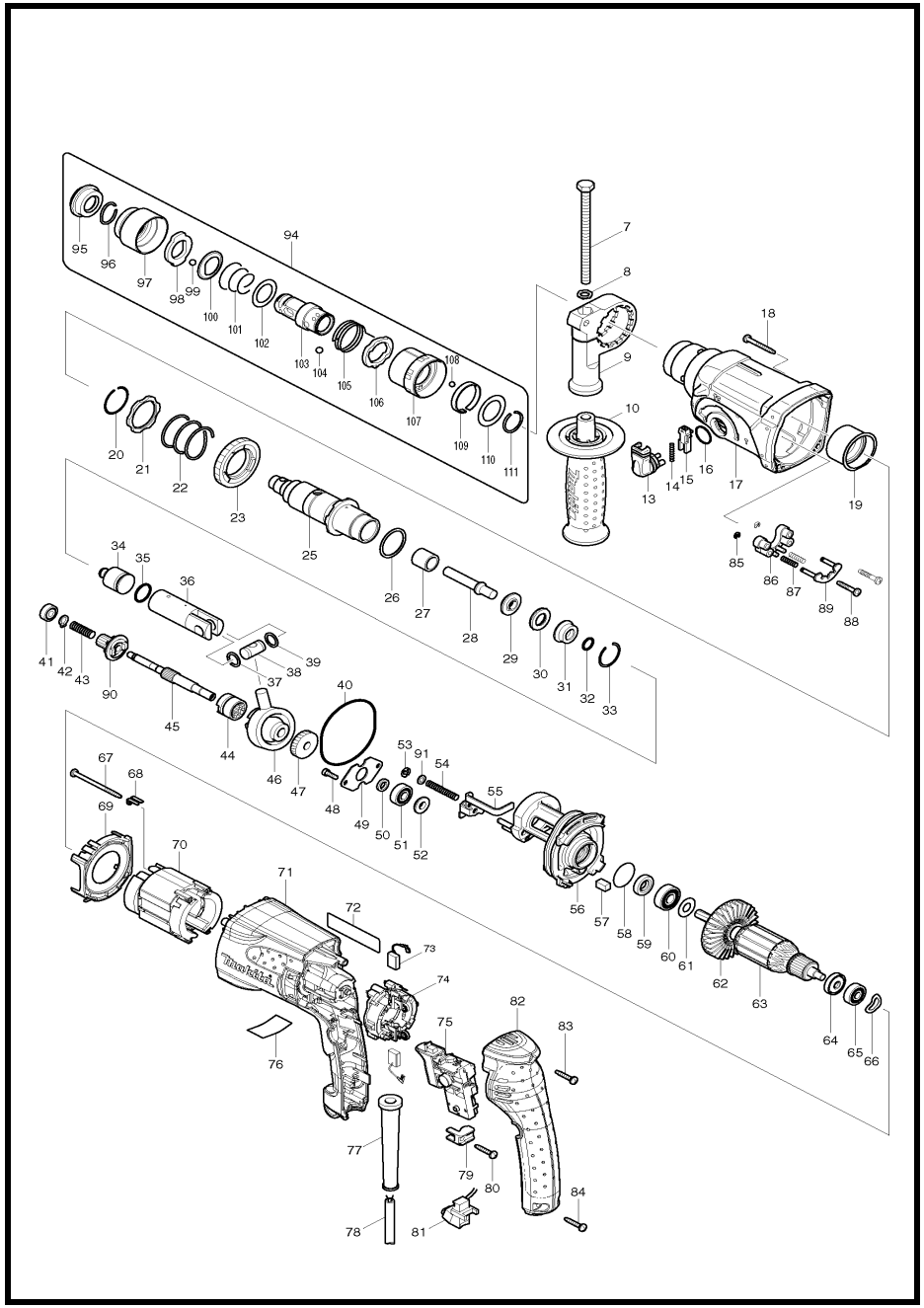

MODEL HR2470FT

ITEM	PARTS ID	DESCRIPTION	PRICE/BAHT
007	921923-8	HEX. BOLT M8X120	80
008	345280-4	HEX. WASHER	30
009	417630-4	GRIP BASE	190
010	158057-6	GRIP 36 COMPLETE	350
013	162245-9	CHANGE LEVER	130
014	233459-8	COMPRESSION SPRING 3	30
015	419192-8	LOCK BUTTON	80
016	213278-8	O RING 17	40
017	158216-2	GEAR HOUSING COMPLETE	610
018	266351-3	TAPPING SCREW 4X35	30
019	153290-5	NEEDLE BEARING COMPLETE	250
020	233929-7	RING SPRING 29	40
021	267460-1	WASHER 31	140
022	233401-9	COMPRESSION SPRING 32	100
023	227109-5	SPUR GEAR 51	730
025	158307-9	TOOL HOLDER GUIDE COMPLETE	1,620
026	267229-3	FLAT WASHER 28	70
027	331769-8	SLEEVE 9	170
028	324796-2	IMPACT BOLT	200
029	324402-9	RING 10	150
030	421955-0	CUSHION RING 13	100
031	324216-6	O RING CASE	280
032	213073-6	O RING 9	110
033	233917-4	RING SPRING 28	40
034	324733-6	STRIKER	160
035	213227-5	O RING 16	100
036	318132-2	PISTON CYLINDER	460
037	267104-3	FLAT WASHER 12	40
038	324215-8	PISTON JOINT	180
039	267104-3	FLAT WASHER 12	40
040	213727-5	O-RING 63	200
041	211012-0	BALL BEARING 606ZZ	230
042	961003-8	RETAINING RING S-7	20
043	233343-7	COMPRESSION SPRING 7	40
044	331992-5	CLUTCH CAM	260
045	324668-1	CAM SHAFT	380
046	219014-0	SWASH BEARING 10	1,370
047	226656-3	HELICAL GEAR 26	300
048	266273-7	HEX. SOCKET HEAD BOLT M4X12	60
049	345179-3	BEARING RETAINER	70
050	267234-0	FLAT WASHER 8	40
051	211032-4	BALL BEARING 608ZZ	200
052	324212-4	RING 8	180
053	961011-9	STOP RING E-4	20
054	233342-9	COMPRESSION SPRING 6	40
055	345363-0	CHANGE PLATE	150
056	141574-3	INNER HOUSING COMPLETE	710
057	443126-9	FELT	40
058	213407-3	O RING 26	40
059	213077-8	OIL SEAL 10	200
060	210059-1	BALL BEARING 6000DDW	300
061	267213-8	FLAT WASHER 10	50
063	515288-4	ARMATURE ASS'Y 220V	
064	681670-0	INSULATION WASHER	40
065	210023-2	BALL BEARING 627DDW	210
066	267804-5	WAVE WASHER 15	40
067	266334-3	TAPPING SCREW 4X60	30
068	344871-8	RETAINER	80
069	419716-0	BUFFLE PLATE	90
070	626578-1	FIELD 220V	
071	419718-6	MOTOR HOUSING	460
073	195001-2	CARBON BRUSH SET CB-325	
074	638500-6	BRUSH HOLDER UNIT	440
075	650589-4	SWITCH C3VA-2L	900
077	682566-8	CORD GUARD 10	80
078	691015-4	POWER SUPPLY CORD 0.75-2-2.5	740
079	687261-5	STRAIN RELIEF	70
080	266324-6	TAPPING SCREW 4X22	30
081	631746-3	LIGHT CIRCUIT	310
082	419717-8	HANDLE COVER	310
083	266324-6	TAPPING SCREW 4X22	30
084	266324-6	TAPPING SCREW 4X22	30
085	961017-7	STOP RING E-3	20
086	417796-0	GUIDE BASE	90
087	233344-5	COMPRESSION SPRING 4	40
088	266374-1	TAPPING SCREW 4X25	30
089	163430-7	LOCK PLATE COMPLETE	150
090	227179-4	SPUR GEAR 10	900
091	941102-2	FLAT WASHER 5	30
094	194080-7	TOOL HOLDER SET	3,060
095	286263-4	CAP 35	110
096	233940-9	RING SPRING 19	60
097	418217-5	CHUCK COVER	140
098	345333-9	STOPPER	110
099	216022-2	STEEL BALL 7.0	20
100	345187-4	GUIDE WASHER	90
101	233916-6	CONICAL COMP. SPRING 21-29	30
102	267279-8	FLAT WASHER 21	50
103	324355-2	TOOL HOLDER	1,780
104	216013-3	STEEL BALL 6	50
105	231669-1	TORSION SPRING 31	60
106	345334-7	CHANGE RING	160
107	418218-3	CHANGE COVER	130
108	216018-3	STEEL BALL 5.0	20
109	345335-5	LEAF SPRING	80
110	267270-6	FLAT WASHER 24	80
111	233924-7	RING SPRING 21	50
A01	194079-2	DRILL CHUCK SET	6,560
A02	324219-0	DEPTH GAUGE	100

SERVICE DRAWING

MODEL NO. HR2475

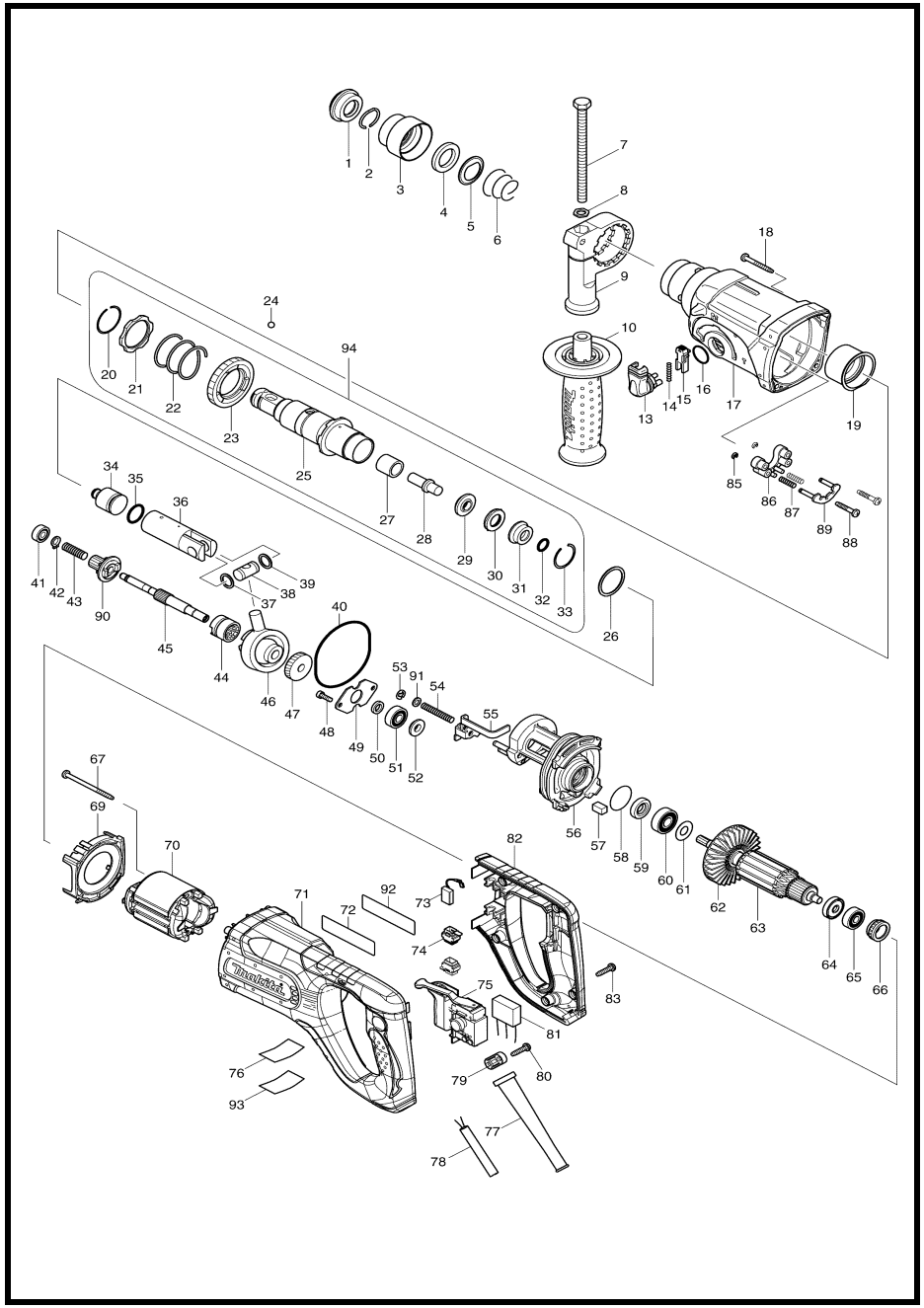

MODEL HR2475

ITEM	PARTS ID	DESCRIPTION	PRICE/BAHT
001	286263-4	CAP 35	110
002	233940-9	RING SPRING 19	60
003	417629-9	CHUCK COVER	110
004	257241-1	RING 21	130
005	345187-4	GUIDE WASHER	90
006	233916-6	CONICAL COMP. SPRING 21-29	30
007	921923-8	HEX. BOLT M8X120	80
008	345280-4	HEX. WASHER	30
009	417630-4	GRIP BASE	190
010	158057-6	GRIP 36 COMPLETE	350
013	162245-9	CHANGE LEVER	130
014	233459-8	COMPRESSION SPRING 3	30
015	419192-8	LOCK BUTTON	80
016	213278-8	O RING 17	40
017	158216-2	GEAR HOUSING COMPLETE	610
018	266351-3	TAPPING SCREW 4X35	30
019	153290-5	NEEDLE BEARING COMPLETE	250
020	233929-7	RING SPRING 29	40
021	267460-1	WASHER 31	140
022	233401-9	COMPRESSION SPRING 32	100
023	227109-5	SPUR GEAR 51	730
024	216022-2	STEEL BALL 7.0	20
025	158574-6	TOOL HOLDER COMPLETE	1,000
026	267229-3	FLAT WASHER 28	70
027	331769-8	SLEEVE 9	170
028	324669-9	IMPACT BOLT	160
029	324402-9	RING 10	150
030	421955-0	CUSHION RING 13	100
031	324216-6	O RING CASE	280
032	213073-6	O RING 9	110
033	233917-4	RING SPRING 28	40
034	324733-6	STRIKER	160
035	213227-5	O RING 16	100
036	318132-2	PISTON CYLINDER	460
037	267104-3	FLAT WASHER 12	40
038	324215-8	PISTON JOINT	180
039	267104-3	FLAT WASHER 12	40
040	213727-5	O-RING 63	200
041	211012-0	BALL BEARING 606ZZ	230
042	961003-8	RETAINING RING S-7	20
043	233343-7	COMPRESSION SPRING 7	40
044	331992-5	CLUTCH CAM	260
045	324668-1	CAM SHAFT	380
046	219014-0	SWASH BEARING 10	1,370
047	226550-9	HELICAL GEAR 26	360
048	266273-7	HEX. SOCKET HEAD BOLT M4X12	60
049	345179-3	BEARING RETAINER	70
050	267234-0	FLAT WASHER 8	40
051	211032-4	BALL BEARING 608ZZ	200
052	324212-4	RING 8	180
053	961011-9	STOP RING E-4	20
054	233342-9	COMPRESSION SPRING 6	40
055	345363-0	CHANGE PLATE	150
056	141574-3	INNER HOUSING COMPLETE	710
057	443126-9	FELT	40
058	213407-3	O RING 26	40
059	213077-8	OIL SEAL 10	200
060	210059-1	BALL BEARING 6000DDW	300
061	267213-8	FLAT WASHER 10	50
063	515788-4	ARMATURE ASS'Y 220V	
064	681636-0	INSULATION WASHER	60
065	211021-9	BALL BEARING 607LLB	240
066	421494-0	RUBBER RING 19	250
067	266334-3	TAPPING SCREW 4X60	30
069	419716-0	BUFFLE PLATE	90
070	633713-4	FIELD 220V	
071	451246-5	MOTOR HOUSING	480
073	B-80422	CARBON BRUSH SET CB-419A	
074	643936-6	BRUSH HOLDER	230
075	650508-0	SWITCH TG813TLB-1	1,440
077	682566-8	CORD GUARD 10	80
078	691015-4	POWER SUPPLY CORD 0.75-2-2.5	740
079	687140-7	STRAIN RELIEF	40
080	265995-6	TAPPING SCREW 4X18	40
082	451247-3	HANDLE COVER	250
083	265995-6	TAPPING SCREW 4X18	40
085	961017-7	STOP RING E-3	20
086	417796-0	GUIDE BASE	90
087	233344-5	COMPRESSION SPRING 4	40
088	266374-1	TAPPING SCREW 4X25	30
089	163430-7	LOCK PLATE COMPLETE	150
090	227179-4	SPUR GEAR 10	900
091	941102-2	FLAT WASHER 5	30
094	123100-0	TOOL HOLDER ASS'Y	2,490
A01	324219-0	DEPTH GAUGE	100
A03	D-17784	SDS-PLUS BIT SET	570

SERVICE DRAWING

MODEL NO. HR2510

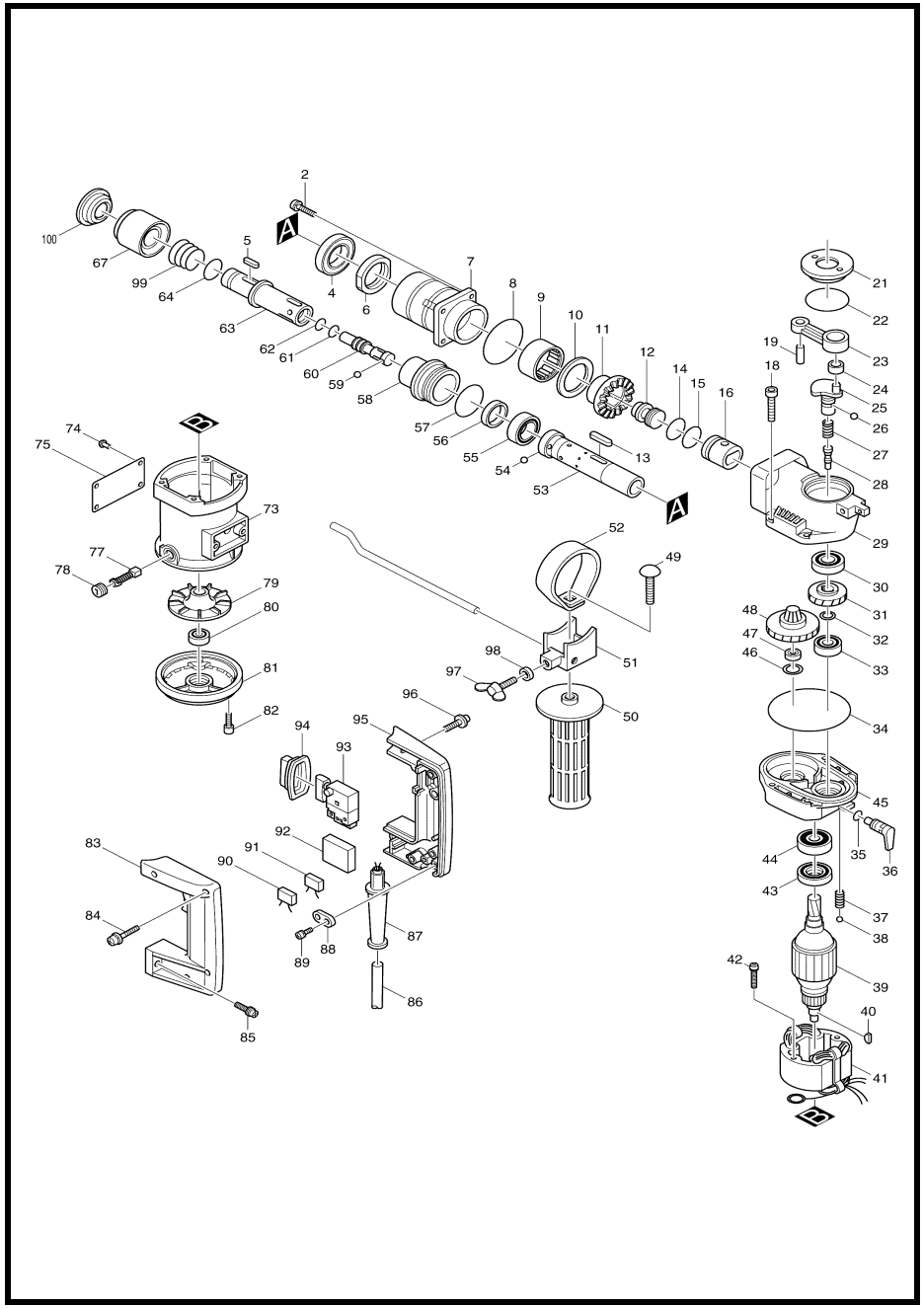

MODEL HR2510

ITEM	PARTS ID	DESCRIPTION	PRICE/BAHT
002	922341-3	HEX. SOCKET HEAD BOLT M6X25	90
004	211441-7	BALL BEARING 3009	880
005	322255-0	ROLLER 6.5	190
006	252214-9	NUT M30.3-36	880
007	315606-4	BARREL	3,540
008	213606-7	O RING 48	80
009	212455-9	NEEDLE BEARING 3516	920
010	253802-5	FLAT WASHER 35	370
011	221333-2	SPIRAL BEVEL GEAR 33	2,930
012	322505-3	STRIKER	670
013	254231-5	KEY 4	100
014	213308-5	O RING 19	170
015	213308-5	O RING 19	170
016	321685-2	PISTON	700
018	922366-7	HEX. SOCKET HEAD BOLT M6X45	110
019	256099-5	PIN 6	80
021	411662-3	CRANK CAP	390
022	213554-0	O RING 44	80
023	315146-2	ROD	800
024	212025-4	NEEDLE BEARING 810	490
025	321615-3	CRANK SHAFT	2,090
026	216011-7	STEEL BALL 5.6	20
027	231327-9	COMPRESSION SPRING 6	50
028	321618-7	CHANGE PIN 8	210
029	159504-0	CRANK HOUSING	3,280
030	211204-1	BALL BEARING 6002	490
031	221719-0	HELICAL GEAR 36	1,200
032	253147-1	FLAT WASHER 15	50
033	211221-1	BALL BEARING 6902	830
034	213806-9	O RING 90	120
035	213011-8	O RING 7	20
036	321614-5	CHANGE LEVER	1,100
037	231328-7	COMPRESSION SPRING 2	80
038	216008-6	STEEL BALL 4	20
039	612798-3	ARMATURE 220V	
040	254031-3	WOODRUFF KEY 3	80
041	522578-8	FIELD ASS'Y 220V	
042	265347-1	+ HEX. BOLT M5X45	120
043	213157-0	OIL SEAL 13	690
044	211069-1	BALL BEARING 6200	360
045	157166-8	GEAR HOUSING	2,430
046	253314-8	THIN WASHER 15	80
047	211034-0	BALL BEARING 608	280
048	151162-8	TORQUE LIMITER COMPLETE	7,300
049	923456-9	CAP SQUARE NECK BOLT M8X35	110
050	273496-0	GRIP 32	800
051	315145-4	GRIP BASE	320
052	342633-8	BELT	270
053	331407-2	CYLINDER LINER 24	5,240
054	216007-8	STEEL BALL 6.4	30
055	213377-6	OIL SEAL 21	670
056	443061-1	FELT RING 20	50
057	213554-0	O RING 44	80

ITEM	PARTS ID	DESCRIPTION	PRICE/BAHT
058	322096-4	SEAL HOLDER	2,230
059	216007-8	STEEL BALL 6.4	30
060	321616-1	IMPACT BOLT	1,840
061	213058-2	O RING 10	120
062	213058-2	O RING 10	120
063	322254-2	DRILL HOLDER	5,720
064	213064-7	O RING 10	170
067	414425-6	CHANGE RING	1,150
073	157523-0	MOTOR HOUSING	2,090
074	953106-2	RIVET 0-5	20
077	B-80307	CARBON BRUSH SET CB-105A	
078	643600-9	BRUSH HOLDER CAP 6-10	70
079	241819-0	FAN 65	370
080	210001-2	BALL BEARING 608LB	340
081	152229-5	BEARING BOX COMPLETE	1,020
082	911241-2	PAN HEAD SCREW M5X25	110
083	181562-8	HANDLE SET	1,150
084	911243-8	PAN HEAD SCREW M5X25	30
085	911343-4	PAN HEAD SCREW M6X25	50
086	691025-1	POWER SUPPLY CORD 0.75-2-5.0	1,070
087	682505-8	CORD GUARD 10-90	150
088	687001-1	STRAIN RELIEF	50
089	911133-5	PAN HEAD SCREW M4X18	50
093	651258-0	SWITCH SGE106CV-1A	2,190
094	421145-5	DUST COVER	170
095	181562-8	HANDLE SET	1,150
096	911328-0	PAN HEAD SCREW M6X18	50
097	924216-2	WING BOLT M5X15	80
098	261042-1	RUBBER WASHER 4.5	50
099	231946-1	CONICAL COMPR. SPRING 21-25	80
100	286220-2	CAP 34	230
400	321144-6	DEPTH GAUGE	100
407	122376-6	DUST COLLECTER ASS'Y	960
408	835263-7	INNER CASE	690
904	242021-8	OIL VESSEL	100
905	782407-9	LOCK NUT WRENCH 35	320

SERVICE DRAWING

MODEL NO. HR2601

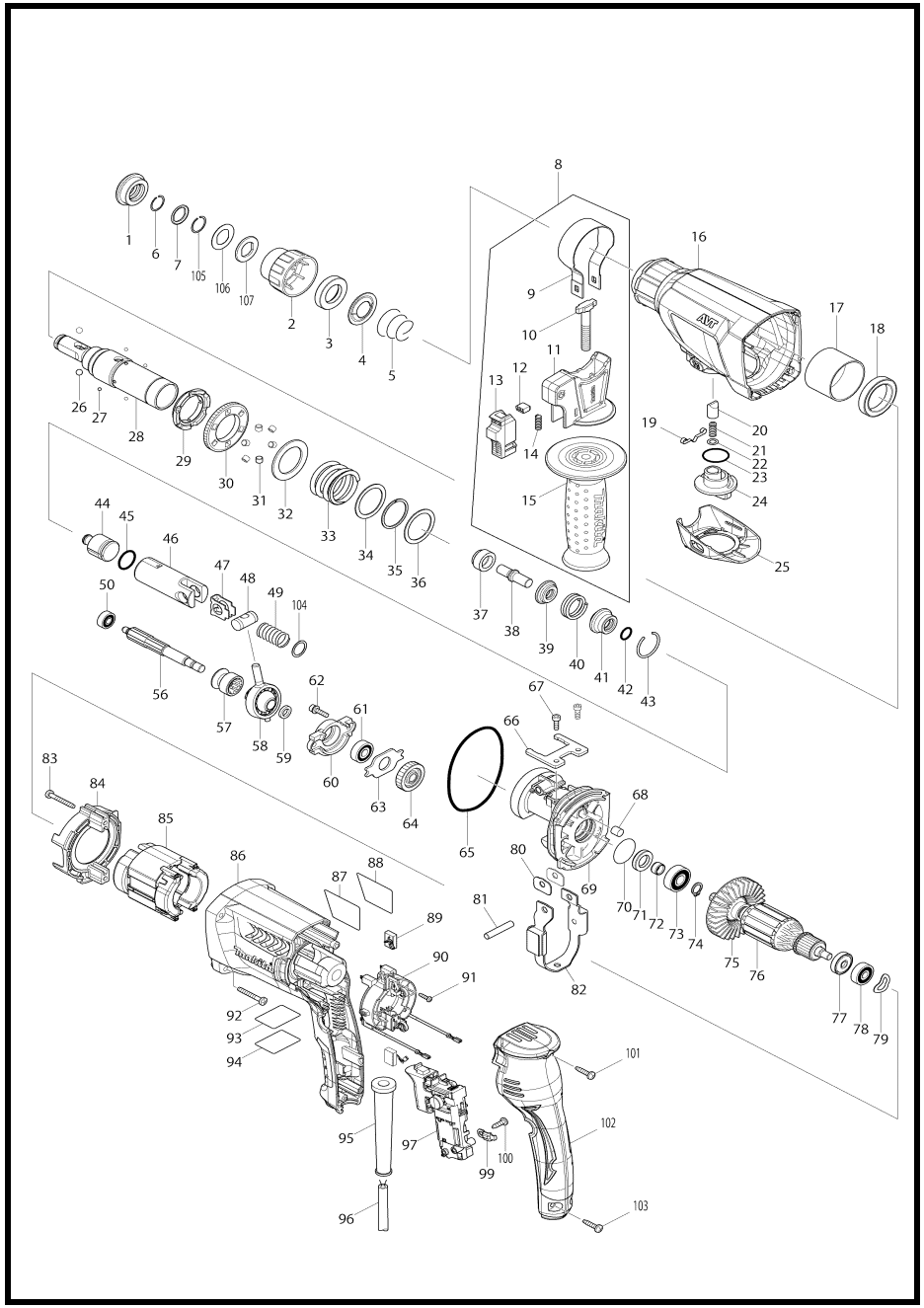

MODEL HR2601

ITEM	PARTS ID	DESCRIPTION	PRICE/BAHT
001	286288-8	CAP 35	70
002	451533-2	CHUCK COVER	70
003	325813-1	RING 21	120
004	346177-0	GUIDE WASHER	60
005	233916-6	CONICAL COMP. SPRING 21-29	30
006	233989-9	RING SPRING 14	30
007	346221-3	WASHER 16	90
008	122878-2	GRIP ASSEMBLY	430
009	346181-9	GRIP SPRING 50	130
010	266349-0	SQUARE BOLT M8X50	140
011	451539-0	GRIP BASE	90
012	313179-1	RACK	30
013	141765-6	LOCK BUTTON COMPLETE	110
014	233360-7	COMPRESSION SPRING 4	110
015	154935-8	GRIP 36 COMPLETE	210
016	140268-7	GEAR HOUSING COMPLETE	310
017	331890-3	CUP SLEEVE	160
018	211294-4	BALL BEARING 6806LLU	350
019	232152-1	LEAF SPRING	150
020	325785-0	PUSH CORN	90
021	234147-0	COMPRESSION SPRING 5	20
022	253308-3	THIN WASHER 6	30
023	213381-5	O RING 21	140
024	451531-6	CHANGE LEVER B	60
025	451532-4	CHANGE LEVER COVER B	90
026	216022-2	STEEL BALL 7.0	20
027	216019-1	STEEL BALL 3	20
028	140265-3	TOOL HOLDER COMPLETE	810
029	313149-0	DRIVING FLANGE	130
030	227232-6	SPUR GEAR 51	150
031	268226-2	PIN 6	290
032	267414-8	FLAT WASHER 30	60
033	234148-8	COMPRESSION SPRING 31	90
034	267153-0	FLAT WASHER 30	70
035	257932-4	SPIRO LOCK WASHER 30	180
036	267153-0	FLAT WASHER 30	70
037	325783-4	SLEEVE 9B	80
038	325789-2	IMPACT BOLT A	140
039	325792-3	WASHER 10	90
040	234149-6	COMPRESSION SPRING 20	70
041	325793-1	O-RING CASE B	100
042	213073-6	O RING 9	110
043	233979-2	RING SPRING 28	20
044	325784-2	STRIKER	160
045	213258-4	O RING 17.5	170
046	310345-1	PISTON CYLINDER	600
047	346036-8	GUIDE PLATE	70
048	324215-8	PISTON JOINT	180
049	234098-7	COMPRESSION SPRING 14	40
050	211012-0	BALL BEARING 606ZZ	230
056	227243-1	SPUR GEAR 10	230
057	331815-7	CLUTCH CAM B	180
058	219020-5	SWASH BEARING 10	

ITEM	PARTS ID	DESCRIPTION	PRICE/BAHT
059	267234-0	FLAT WASHER 8	40
060	310344-3	BEARING BOX	220
061	211032-4	BALL BEARING 608ZZ	200
062	266437-3	HEX. SOCKET HEAD BOLT M4X16	90
063	285735-6	BEARING RETAINER	90
064	227719-8	HELICAL GEAR 26	170
065	213728-3	O-RING 68	70
066	346222-1	PLATE	60
067	265353-6	HEX. SOCKET HEAD BOLT M4X12	100
068	443153-6	FELT	30
069	141573-5	INNER HOUSING COMPLETE	840
070	213407-3	O RING 26	40
071	213678-2	OIL SEAL 12	350
072	262569-4	SLEEVE 9	70
073	211097-6	BALL BEARING 6000LLB	330
074	961006-2	RETAINING RING S-10	20
076	515358-9	ARMATURE ASSEMBLY 220V	
077	681652-2	INSULATION WASHER	60
078	210023-2	BALL BEARING 627DDW	210
079	267804-5	WAVE WASHER 15	40
080	346180-1	WEIGHT HOLDER GUIDE	20
081	256246-8	PIN 6	90
082	165593-5	COUNTER WEIGHT	220
083	266361-0	TAPPING SCREW 4X30	70
084	451527-7	BAFFLE PLATE	70
085	626633-9	FIELD 220V	
086	451536-6	MOTOR HOUSING	360
088	819390-8	CLEAR LABEL	20
089	195001-2	CARBON BRUSH SET CB-325	
090	638655-7	BRUSH HOLDER UNIT	310
091	266556-5	TAPPING SCREW 3X12	20
092	266361-0	TAPPING SCREW 4X30	70
095	682566-8	CORD GUARD 10	80
096	691015-4	POWER SUPPLY CORD 0.75-2-2.5	740
097	650626-4	SWITCH TG853TB-1	440
099	687682-1	STRAIN RELIEF	50
100	266385-6	TAPPING SCREW 4X14	70
101	266326-2	TAPPING SCREW 4X18	30
102	451528-5	HANDLE COVER	190
103	266326-2	TAPPING SCREW 4X18	30
104	267447-3	FLAT WASHER 14	30
105	233992-0	RING SPRING 15	30
106	267437-6	FLAT WASHER 17	30
107	424364-2	RUBBER WASHER 16	30
A01	331886-4	DEPTH GAUGE	100
A04	195171-7	DUSTCUP SET	610

SERVICE DRAWING

MODEL NO. HR2611FTX

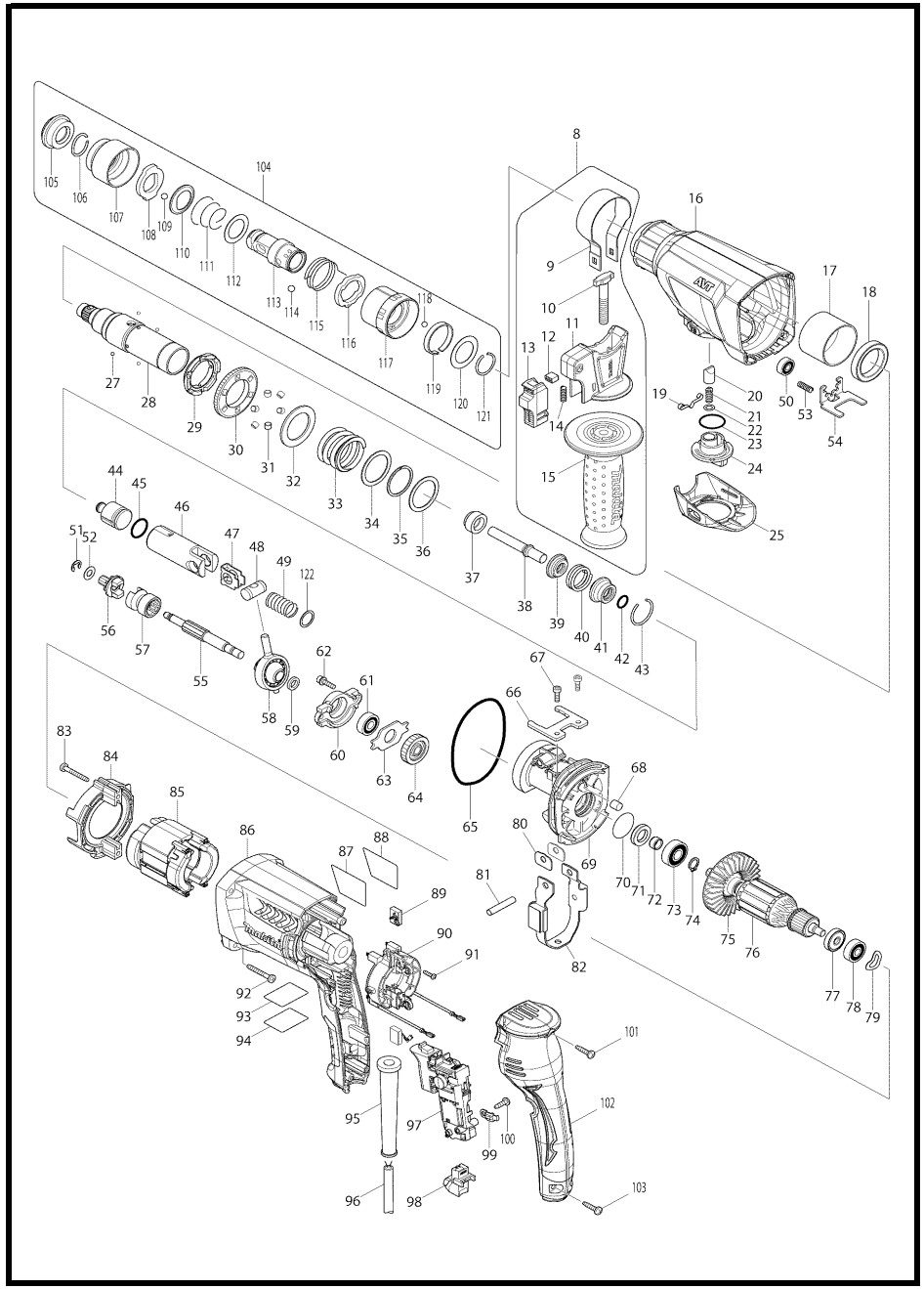

MODEL HR2611FTX

ITEM	PARTS ID	DESCRIPTION	PRICE/BAHT	ITEM	PARTS ID	DESCRIPTION	PRICE/BAHT
008	122878-2	GRIP ASSEMBLY	430	062	266437-3	HEX. SOCKET HEAD BOLT M4X16	90
009	346181-9	GRIP SPRING 50	130	063	285735-6	BEARING RETAINER	90
010	266349-0	SQUARE BOLT M8X50	140	064	227719-8	HELICAL GEAR 26	170
011	451539-0	GRIP BASE	90	065	213728-3	O-RING 68	70
012	313179-1	RACK	30	066	346222-1	PLATE	60
013	141765-6	LOCK BUTTON COMPLETE	110	067	265353-6	HEX. SOCKET HEAD BOLT M4X12	100
014	233360-7	COMPRESSION SPRING 4	110	068	443153-6	FELT	30
015	154935-8	GRIP 36 COMPLETE	210	069	141573-5	INNER HOUSING COMPLETE	840
016	140423-1	GEAR HOUSING COMPLETE	380	070	213407-3	O RING 26	40
017	331890-3	CUP SLEEVE	160	071	213678-2	OIL SEAL 12	350
018	211294-4	BALL BEARING 6806LLU	350	072	262569-4	SLEEVE 9	70
019	232152-1	LEAF SPRING	150	073	211097-6	BALL BEARING 6000LLB	330
020	325785-0	PUSH CORN	90	074	961006-2	RETAINING RING S-10	20
021	234147-0	COMPRESSION SPRING 5	20	075	240121-8	FAN 65	
022	253308-3	THIN WASHER 6	30	076	515358-9	ARMATURE ASSEMBLY 220V	
023	213381-5	O RING 21	140	077	681652-2	INSULATION WASHER	60
024	451529-3	CHANGE LEVER A	60	078	210023-2	BALL BEARING 627DDW	210
025	451530-8	CHANGE LEVER COVER A	90	079	267804-5	WAVE WASHER 15	40
027	216019-1	STEEL BALL 3	20	080	346180-1	WEIGHT HOLDER GUIDE	20
028	140266-1	TOOL HOLDERGUIDE COMPLETE	830	081	256246-8	PIN 6	90
029	313149-0	DRIVING FLANGE	130	082	165593-5	COUNTER WEIGHT	220
030	227232-6	SPUR GEAR 51	150	083	266361-0	TAPPING SCREW 4X30	70
031	268226-2	PIN 6	290	084	451527-7	BAFFLE PLATE	70
032	267414-8	FLAT WASHER 30	60	085	626633-9	FIELD 220V	
033	234148-8	COMPRESSION SPRING 31	90	086	451535-8	MOTOR HOUSING	360
034	267153-0	FLAT WASHER 30	70	089	195001-2	CARBON BRUSH SET CB-325	
035	257932-4	SPIRO LOCK WASHER 30	180	090	638655-7	BRUSH HOLDER UNIT	310
036	267153-0	FLAT WASHER 30	70	091	266556-5	TAPPING SCREW 3X12	20
037	325783-4	SLEEVE 9B	80	092	266361-0	TAPPING SCREW 4X30	70
038	325791-5	IMPACT BOLT B	110	093	867751-6	HR2611FT SERIAL NO.LABEL	
039	325792-3	WASHER 10	90	094	819389-3	CLEAR LABEL	20
040	234149-6	COMPRESSION SPRING 20	70	095	682566-8	CORD GUARD 10	80
041	325793-1	O-RING CASE B	100	096	691015-4	POWER SUPPLY CORD 0.75-2-2.5	740
042	213073-6	O RING 9	110	097	650626-4	SWITCH TG853TB-1	440
043	233979-2	RING SPRING 28	20	098	631937-6	LIGHT CIRCUIT	270
044	325784-2	STRIKER	160	099	687682-1	STRAIN RELIEF	50
045	213258-4	O RING 17.5	170	100	266385-6	TAPPING SCREW 4X14	70
046	310345-1	PISTON CYLINDER	600	101	266326-2	TAPPING SCREW 4X18	30
047	346036-8	GUIDE PLATE	70	102	451528-5	HANDLE COVER	190
048	324215-8	PISTON JOINT	180	103	266326-2	TAPPING SCREW 4X18	30
049	234098-7	COMPRESSION SPRING 14	40	104	194080-7	TOOL HOLDER SET	3,060
050	211012-0	BALL BEARING 606ZZ	230	105	286263-4	CAP 35	110
051	257336-0	STOP RING EXT U-6	20	106	233940-9	RING SPRING 19	60
052	253186-1	FLAT WASHER 7	100	107	418217-5	CHUCK COVER	140
053	233360-7	COMPRESSION SPRING 4	110	108	345333-9	STOPPER	110
054	346176-2	LOCK PLATE	50	109	216022-2	STEEL BALL 7.0	20
055	325786-8	CAM SHAFT	220	110	345187-4	GUIDE WASHER	90
056	227231-8	SPUR GEAR 10	710	111	233916-6	CONICAL COMP. SPRING 21-29	30
057	331814-9	CLUTCH CAM A	200	112	267279-8	FLAT WASHER 21	50
058	219020-5	SWASH BEARING 10	880	113	324355-2	TOOL HOLDER	1,780
059	267234-0	FLAT WASHER 8	40	114	216013-3	STEEL BALL 6	50
060	310344-3	BEARING BOX	220	115	231669-1	TORSION SPRING 31	60
061	211032-4	BALL BEARING 608ZZ	200	116	345334-7	CHANGE RING	160

SERVICE DRAWING

MODEL NO. HR2611FTX

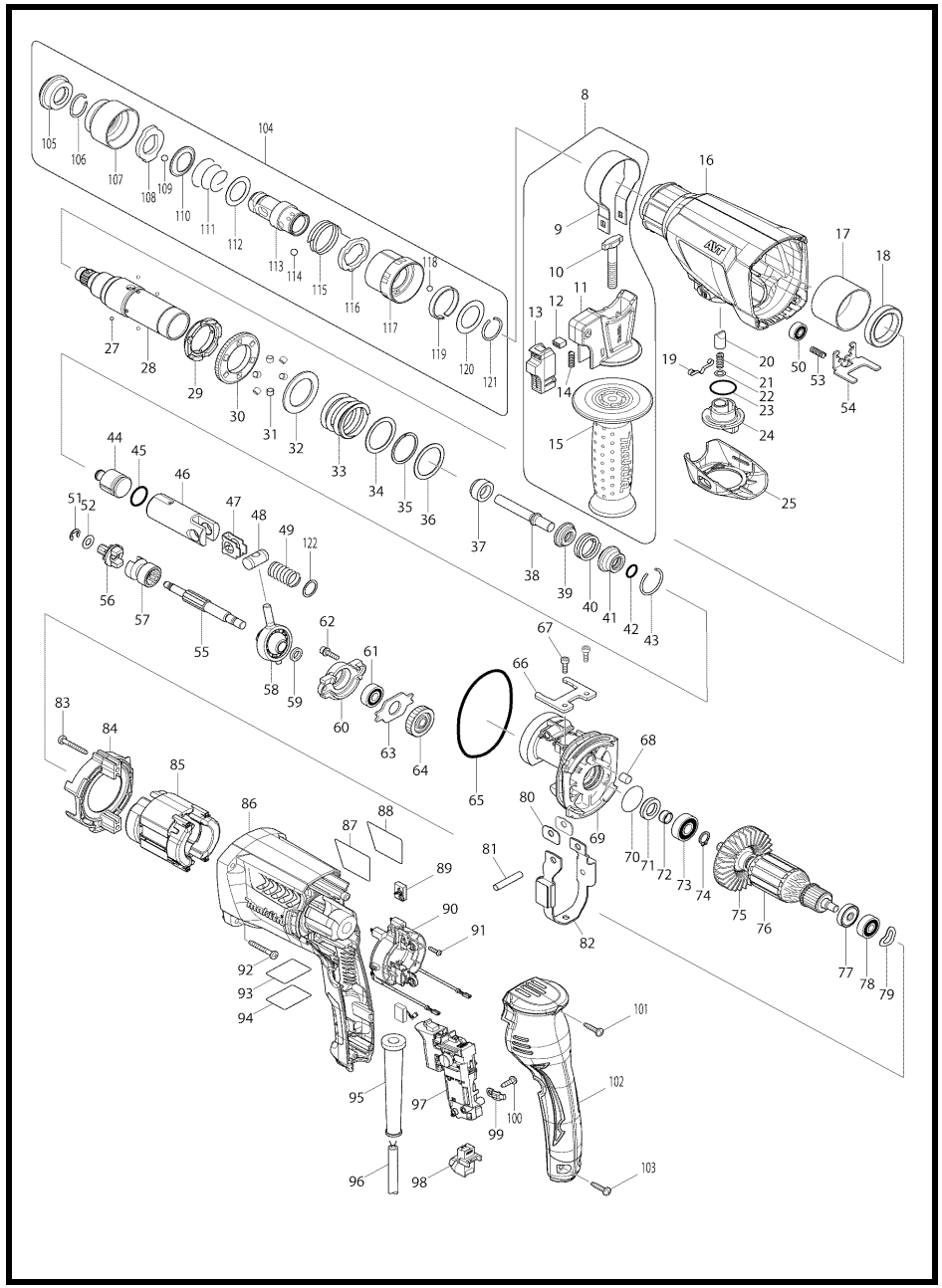

MODEL HR2611FTX

ITEM	PARTS ID	DESCRIPTION	PRICE/BAHT
117	418218-3	CHANGE COVER	130
118	216018-3	STEEL BALL 5.0	20
119	345335-5	LEAF SPRING	80
120	267270-6	FLAT WASHER 24	80
121	233924-7	RING SPRING 21	50
122	267447-3	FLAT WASHER 14	30
A01	331886-4	DEPTH GAUGE	100
A04	194079-2	DRILL CHUCK SET	6,560
A05	195179-1	DUSTCUP SET	680

SERVICE DRAWING

MODEL NO. HR2611FX

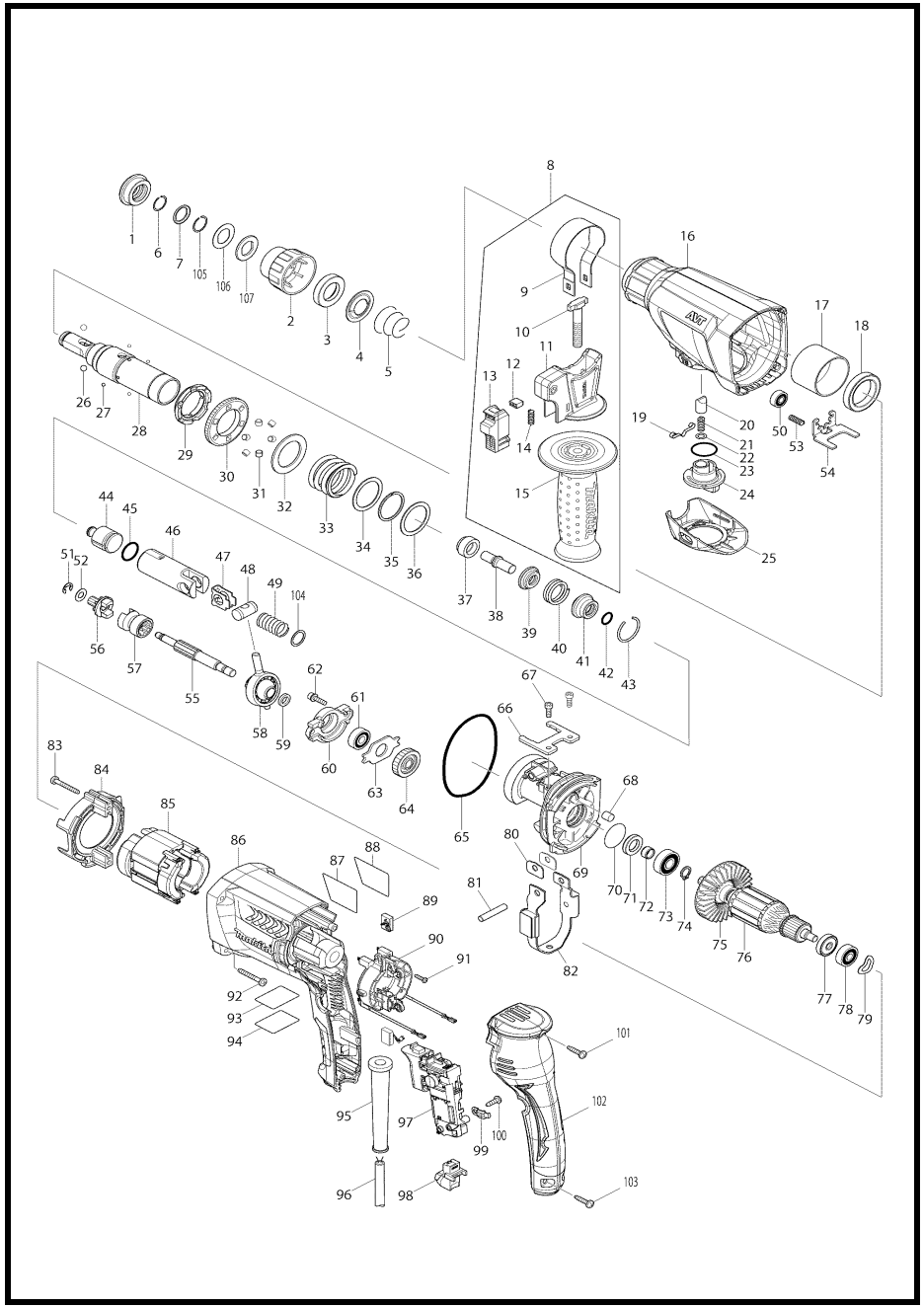

MODEL HR2611FX

ITEM	PARTS ID	DESCRIPTION	PRICE/BAHT	ITEM	PARTS ID	DESCRIPTION	PRICE/BAHT
001	286288-8	CAP 35	70	054	346176-2	LOCK PLATE	50
002	451533-2	CHUCK COVER	70	055	325786-8	CAM SHAFT	220
003	325813-1	RING 21	120	056	227231-8	SPUR GEAR 10	710
004	346177-0	GUIDE WASHER	60	057	331814-9	CLUTCH CAM A	200
005	233916-6	CONICAL COMP. SPRING 21-29	30	058	219020-5	SWASH BEARING 10	880
006	233989-9	RING SPRING 14	30	059	267234-0	FLAT WASHER 8	40
007	346221-3	WASHER 16	90	060	310344-3	BEARING BOX	220
008	122878-2	GRIP ASSEMBLY	430	061	211032-4	BALL BEARING 608ZZ	200
009	346181-9	GRIP SPRING 50	130	062	266437-3	HEX. SOCKET HEAD BOLT M4X16	90
010	266349-0	SQUARE BOLT M8X50	140	063	285735-6	BEARING RETAINER	90
011	451539-0	GRIP BASE	90	064	227719-8	HELICAL GEAR 26	170
012	313179-1	RACK	30	065	213728-3	O-RING 68	70
013	141765-6	LOCK BUTTON COMPLETE	110	066	346222-1	PLATE	60
014	233360-7	COMPRESSION SPRING 4	110	067	265353-6	HEX. SOCKET HEAD BOLT M4X12	100
015	154935-8	GRIP 36 COMPLETE	210	068	443153-6	FELT	30
016	140423-1	GEAR HOUSING COMPLETE	380	069	141573-5	INNER HOUSING COMPLETE	840
017	331890-3	CUP SLEEVE	160	070	213407-3	O RING 26	40
018	211294-4	BALL BEARING 6806LLU	350	071	213678-2	OIL SEAL 12	350
019	232152-1	LEAF SPRING	150	072	262569-4	SLEEVE 9	70
020	325785-0	PUSH CORN	90	073	211097-6	BALL BEARING 6000LLB	330
021	234147-0	COMPRESSION SPRING 5	20	074	961006-2	RETAINING RING S-10	20
022	253308-3	THIN WASHER 6	30	076	515358-9	ARMATURE ASSEMBLY 220V	
023	213381-5	O RING 21	140	077	681652-2	INSULATION WASHER	60
024	451529-3	CHANGE LEVER A	60	078	210023-2	BALL BEARING 627DDW	210
025	451530-8	CHANGE LEVER COVER A	90	079	267804-5	WAVE WASHER 15	40
026	216022-2	STEEL BALL 7.0	20	080	346180-1	WEIGHT HOLDER GUIDE	20
027	216019-1	STEEL BALL 3	20	081	256246-8	PIN 6	90
028	140265-3	TOOL HOLDER COMPLETE	810	082	165593-5	COUNTER WEIGHT	220
029	313149-0	DRIVING FLANGE	130	083	266361-0	TAPPING SCREW 4X30	70
030	227232-6	SPUR GEAR 51	150	084	451527-7	BAFFLE PLATE	70
031	268226-2	PIN 6	290	085	626633-9	FIELD 220V	
032	267414-8	FLAT WASHER 30	60	086	451535-8	MOTOR HOUSING	360
033	234148-8	COMPRESSION SPRING 31	90	089	195001-2	CARBON BRUSH SET CB-325	
034	267153-0	FLAT WASHER 30	70	090	638655-7	BRUSH HOLDER UNIT	310
035	257932-4	SPIRO LOCK WASHER 30	180	091	266556-5	TAPPING SCREW 3X12	20
036	267153-0	FLAT WASHER 30	70	092	266361-0	TAPPING SCREW 4X30	70
037	325783-4	SLEEVE 9B	80	093	867733-8	HR2611F SERIAL NO.LABEL	
038	325789-2	IMPACT BOLT A	140	094	819389-3	CLEAR LABEL	20
039	325792-3	WASHER 10	90	095	682566-8	CORD GUARD 10	80
040	234149-6	COMPRESSION SPRING 20	70	096	691015-4	POWER SUPPLY CORD 0.75-2-2.5	740
041	325793-1	O-RING CASE B	100	097	650626-4	SWITCH TG853TB-1	440
042	213073-6	O RING 9	110	098	631937-6	LIGHT CIRCUIT	270
043	233979-2	RING SPRING 28	20	099	687682-1	STRAIN RELIEF	50
044	325784-2	STRIKER	160	100	266385-6	TAPPING SCREW 4X14	70
045	213258-4	O RING 17.5	170	101	266326-2	TAPPING SCREW 4X18	30
046	310345-1	PISTON CYLINDER	600	102	451528-5	HANDLE COVER	190
047	346036-8	GUIDE PLATE	70	103	266326-2	TAPPING SCREW 4X18	30
048	324215-8	PISTON JOINT	180	104	267447-3	FLAT WASHER 14	30
049	234098-7	COMPRESSION SPRING 14	40	105	233992-0	RING SPRING 15	30
050	211012-0	BALL BEARING 606ZZ	230	106	267437-6	FLAT WASHER 17	30
051	257336-0	STOP RING EXT U-6	20	107	424364-2	RUBBER WASHER 16	30
052	253186-1	FLAT WASHER 7	100	A01	331886-4	DEPTH GAUGE	100
053	233360-7	COMPRESSION SPRING 4	110	A04	195171-7	DUSTCUP SET	610

SERVICE DRAWING

MODEL NO. HR2631F

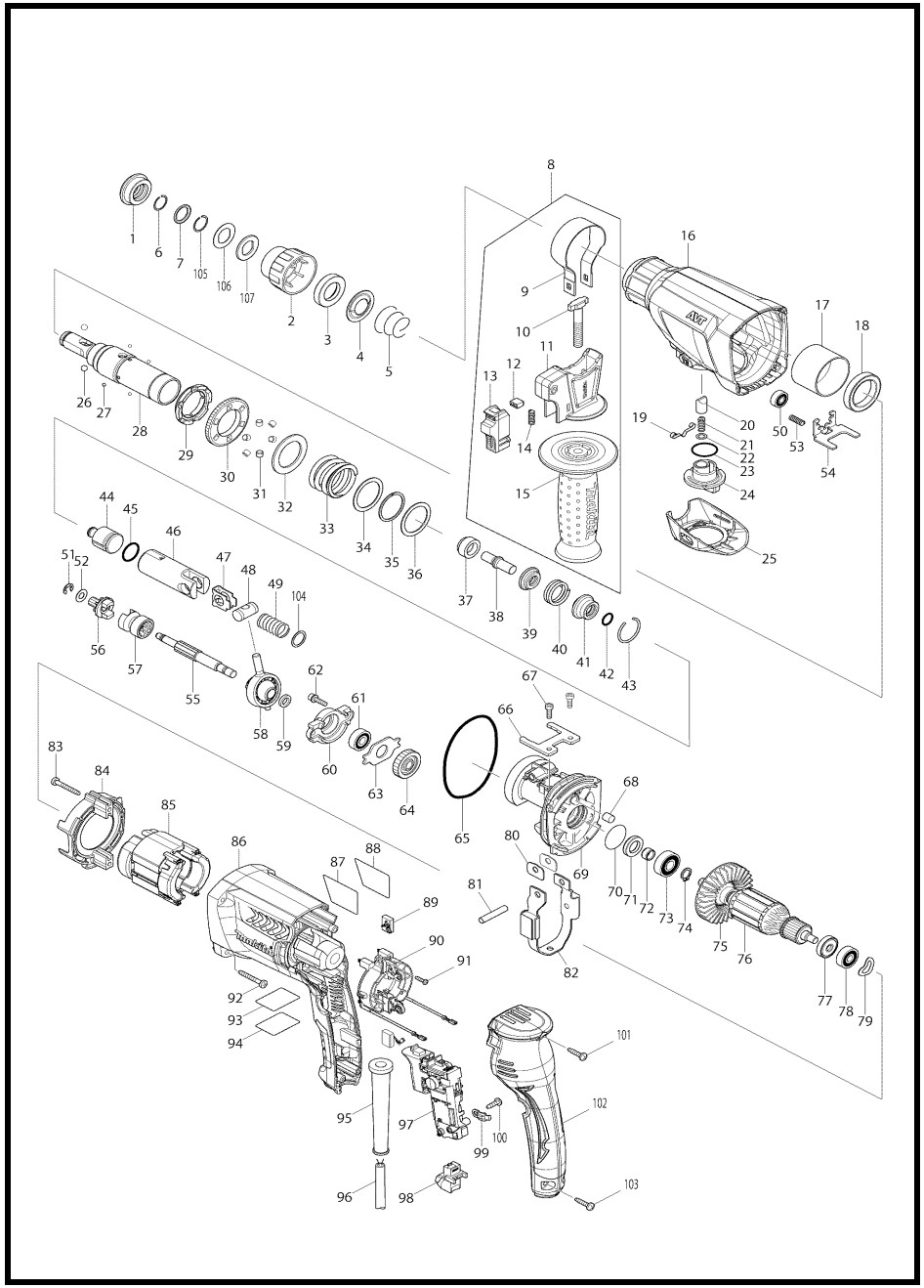

MODEL HR2631F

ITEM	PARTS ID	DESCRIPTION	PRICE/BAHT	ITEM	PARTS ID	DESCRIPTION	PRICE/BAHT
001	286288-8	CAP 35	70	054	346176-2	LOCK PLATE	50
002	455393-4	CHUCK COVER	50	055	326448-1	CAM SHAFT	230
003	325813-1	RING 21	120	056	227359-2	SPUR GEAR 10	920
004	346177-0	GUIDE WASHER	60	057	332125-5	CLUTCH CAM	220
005	233916-6	CONICAL COMP. SPRING 21-29	30	058	219023-9	SWASH BEARING 10	810
006	233989-9	RING SPRING 14	30	059	257321-3	RING 8	60
007	346834-0	WASHER 16	70	060	310344-3	BEARING BOX	220
008	122878-2	GRIP ASSEMBLY	430	061	211032-4	BALL BEARING 608ZZ	200
009	346181-9	GRIP SPRING 50	130	062	266437-3	HEX. SOCKET HEAD BOLT M4X16	90
010	266349-0	SQUARE BOLT M8X50	140	063	285735-6	BEARING RETAINER	90
011	451539-0	GRIP BASE	90	064	227719-8	HELICAL GEAR 26	170
012	141765-6	LOCK BUTTON COMPLETE	110	065	213728-3	O-RING 68	70
013	233360-7	COMPRESSION SPRING 4	110	066	346222-1	PLATE	60
014	154935-8	GRIP 36 COMPLETE	210	067	265353-6	HEX. SOCKET HEAD BOLT M4X12	100
015	142970-8	GEAR HOUSING COMPLETE	360	069	443153-6	FELT	30
016	213636-8	OIL SEAL 25	310	069	141573-5	INNER HOUSING COMPLETE	840
017	331890-3	CUP SLEEVE	160	070	213407-3	O RING 26	40
018	211294-4	BALL BEARING 6806LLU	350	071	213678-2	OIL SEAL 12	350
019	232286-0	LEAF SPRING	30	072	262569-4	SLEEVE 9	70
020	346833-2	CHANGE PLATE B	80	073	211097-6	BALL BEARING 6000LLB	450
021	346832-4	CHANGE PLATE A	100	074	961006-2	RETAINING RING S-10	20
022	213278-8	O RING 17	40	075	240121-8	FAN 65	90
023	455392-6	CHANGE LEVER	50	076	515358-9	ARMATURE ASSEMBLY 220V	
024	455394-2	CHANGE LEVER CAP	40	077	681652-2	INSULATION WASHER	60
025	455391-8	CHANGE LEVER COVER	110	078	210023-2	BALL BEARING 627DDW	210
026	216022-2	STEEL BALL 7.0	20	079	267804-5	WAVE WASHER 15	40
027	216019-1	STEEL BALL 3	20	080	346180-1	WEIGHT HOLDER GUIDE	20
028	213344-1	OIL SEAL 9	280	081	256246-8	PIN 6	90
028	142972-4	TOOL HOLDER COMPLETE	810	082	165593-5	COUNTER WEIGHT	220
029	332139-4	DRIVING FLANGE	130	083	266361-0	TAPPING SCREW 4X30	70
030	227360-7	SPUR GEAR 51	150	084	451527-7	BAFFLE PLATE	70
032	267414-8	FLAT WASHER 30	60	085	626633-9	FIELD 220V	
033	234148-8	COMPRESSION SPRING 31	90	086	451535-8	MOTOR HOUSING	360
034	267153-0	FLAT WASHER 30	70	087	850L56-3	HR2631F NAME PLATE	
035	257932-4	SPIRO LOCK WASHER 30	180	088	819390-8	CLEAR LABEL	20
036	267153-0	FLAT WASHER 30	70	089	195001-2	CARBON BRUSH SET CB-325	180
037	325783-4	SLEEVE 9B	80	090	638655-7	BRUSH HOLDER UNIT	310
038	325789-2	IMPACT BOLT A	140	091	266556-5	TAPPING SCREW 3X12	20
039	325792-3	WASHER 10	90	092	266361-0	TAPPING SCREW 4X30	70
040	234149-6	COMPRESSION SPRING 20	70	093	867733-8	HR2611F SERIAL NO.LABEL	
041	325793-1	O-RING CASE B	100	094	819389-3	CLEAR LABEL	20
042	213073-6	O RING 9	110	095	682566-8	CORD GUARD 10	80
043	233979-2	RING SPRING 28	20	096	691015-4	POWER SUPPLY CORD 0.75-2-2.5	740
044	325784-2	STRIKER	160	097	650626-4	SWITCH TG853TB-1	440
045	213258-4	O RING 17.5	170	098	631937-6	LIGHT CIRCUIT	270
046	310345-1	PISTON CYLINDER	600	099	687682-1	STRAIN RELIEF	50
047	346036-8	GUIDE PLATE	70	100	266385-6	TAPPING SCREW 4X14	70
048	324215-8	PISTON JOINT	180	101	266326-2	TAPPING SCREW 4X18	30
049	234098-7	COMPRESSION SPRING 14	40	102	451528-5	HANDLE COVER	190
050	210028-2	BALL BEARING 606ZZ	130	103	266326-2	TAPPING SCREW 4X18	30
051	257336-0	STOP RING EXT U-6	20	104	267447-3	FLAT WASHER 14	30
052	253186-1	FLAT WASHER 7	100	105	233992-0	RING SPRING 15	30
053	233360-7	COMPRESSION SPRING 4	110	106	267114-0	FLAT WASHER 17	80

SERVICE DRAWING

MODEL NO. HR2631F

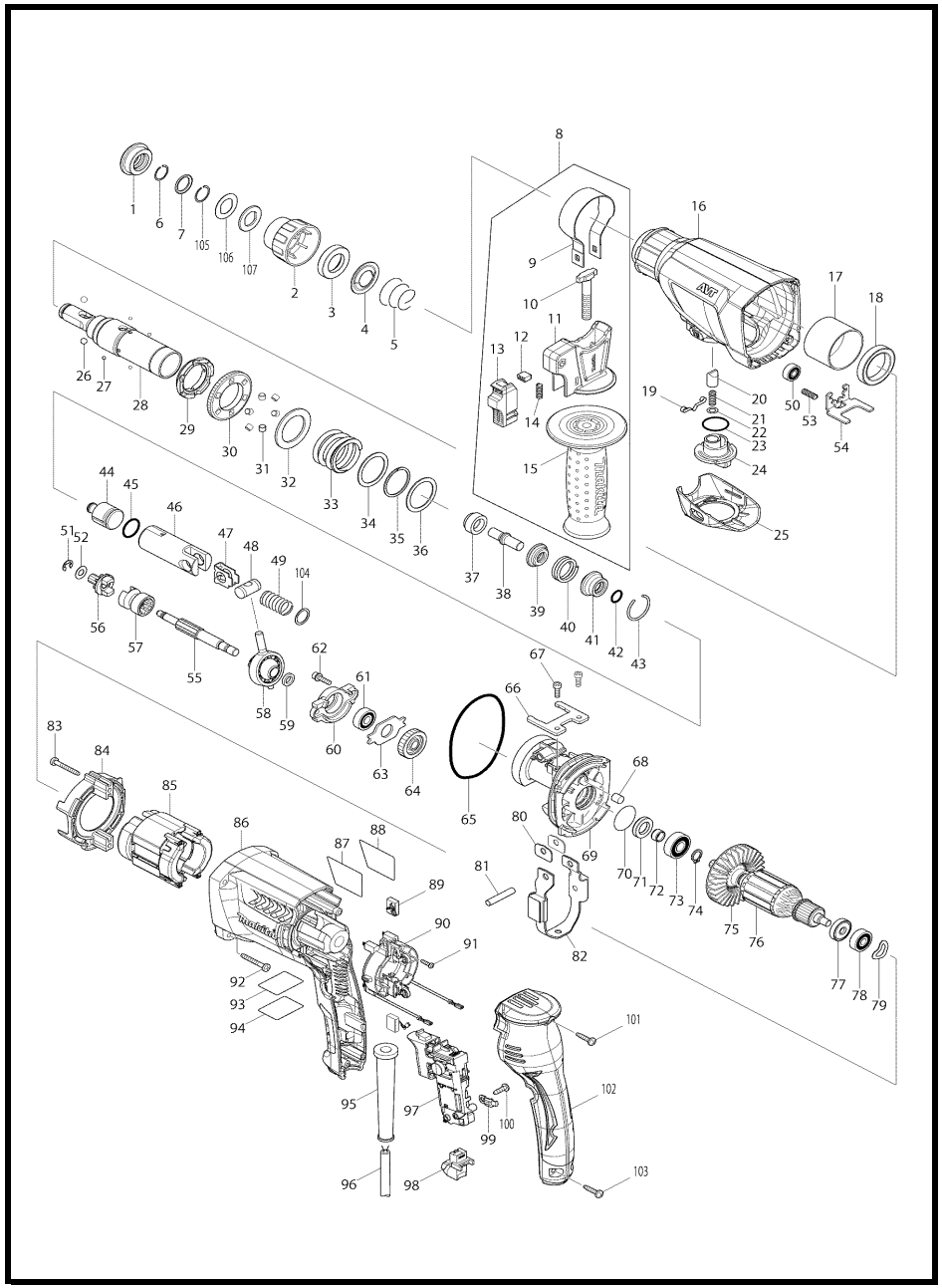

MODEL HR2631F

ITEM	PARTS ID	DESCRIPTION	PRICE/BAHT
107	234343-0	COMPRESSION SPRING 5	20
108	263005-3	RUBBER PIN 6	30
A01	331886-4	DEPTH GAUGE	100
A02	162302-3	LATCH	90
A03	824913-9	PLASTIC CARRYING CASE	
A04	195171-7	DUSTCUP SET	610

SERVICE DRAWING

MODEL NO. HR2810T

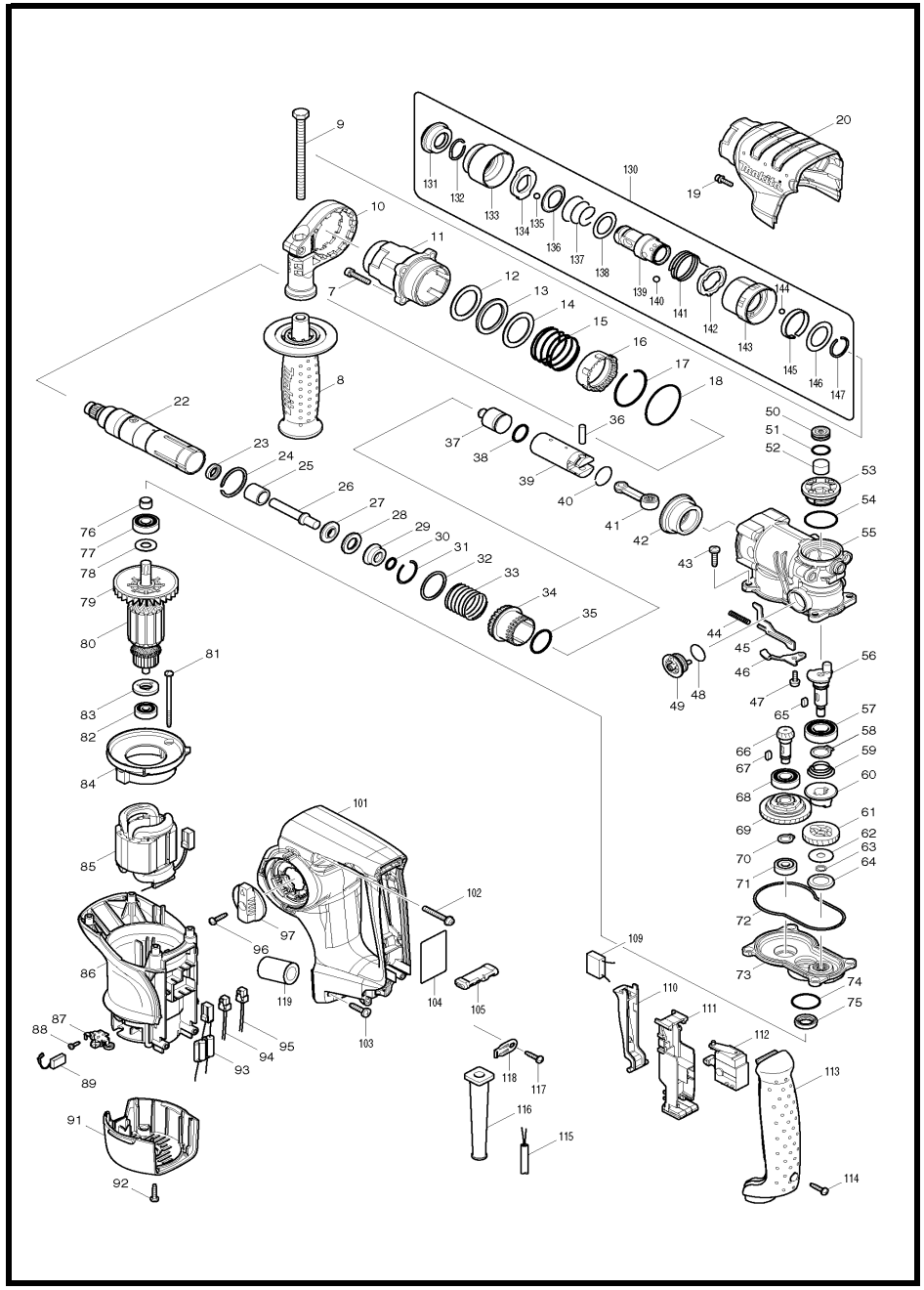

MODEL HR2810T

ITEM	PARTS ID	DESCRIPTION	PRICE/BAHT	ITEM	PARTS ID	DESCRIPTION	PRICE/BAHT
007	922241-7	HEX. SOCKET HEAD BOLT M5X25	90	061	226653-9	HELICAL GEAR 29	490
008	158057-6	GRIP 36 COMPLETE	350	062	267353-2	FLAT WASHER 8	50
009	921919-9	HEX. BOLT M8X110	210	063	961034-7	RETAINING RING	60
010	419975-6	GRIP BASE 20	210	064	345818-5	CUP WASHER 16	50
011	158288-7	BARREL COMPLETE	820	065	254239-9	KEY 4	100
012	267354-0	FLAT WASHER 31	80	066	227524-3	SPIRAL BEVEL GEAR 9	940
013	262133-1	URETHANE RING 31	300	067	254239-9	KEY 4	100
014	267354-0	FLAT WASHER 31	80	068	210105-0	BALL BEARING 6001LLU	360
015	234020-4	COMPRESSION SPRING 37	70	069	125386-2	TORQUE LIMITTER ASS'Y	2,880
016	419986-1	LOCK SLEEVE	100	070	961006-2	RETAINING RING S-10	20
017	233952-2	RING SPRING 41	40	071	210024-0	BALL BEARING 608LLU	240
018	213620-3	O RING 46	80	072	424028-8	SEAL RING	60
019	922128-3	HEX. SOCKET HEAD BOLT M4X16	30	073	158287-9	GEAR HOUSING COMPLETE	620
020	419984-5	CRANK HOUSING COVER	310	074	213445-5	O-RING 26	30
022	158286-1	TOOL HOLDER GUIDE COMPLETE	4,490	075	213133-4	OIL SEAL 12	360
023	213344-1	OIL SEAL 9	280	076	331775-3	SLEEVE 10	120
024	961140-8	RETAINING RING	90	077	210054-1	BALL BEARING 6000LLU	370
025	331769-8	SLEEVE 9	170	078	253171-4	FLAT WASHER 10	50
026	324796-2	IMPACT BOLT	200	080	515293-1	ARMATURE ASS'Y 220V	
027	324402-9	RING 10	150	081	266325-4	TAPPING SCREW 4X70	30
028	421955-0	CUSHION RING 13	100	082	210023-2	BALL BEARING 627DDW	210
029	324216-6	O RING CASE	280	083	681656-4	INSULATION WASHER	60
030	213073-6	O RING 9	110	084	419989-5	BUFFLE PLATE	130
031	233917-4	RING SPRING 28	40	085	526583-7	FIELD ASS'Y 220V	
032	267105-1	FLAT WASHER 29	120	086	419981-1	MOTOR HOUSING	570
033	234021-2	COMPRESSION SPRING 30	70	087	643766-5	BRUSH HOLDER	180
034	331770-3	DRIVING SLEEVE	1,490	088	266421-8	TAPPING SCREW 3X10	30
035	213435-8	O RING 26	60	089	195001-2	CARBON BRUSH SET CB-325	
036	256099-5	PIN 6	80	091	419983-7	REAR COVER	390
037	324733-6	STRIKER	160	092	266326-2	TAPPING SCREW 4X18	30
038	213227-5	O RING 16	100	093	638565-8	LEAD UNIT	190
039	331776-1	PISTON CYLINDER	1,120	094	638567-4	LEAD UNIT	130
040	233954-8	RING SPRING 21	30	095	638566-6	LEAD UNIT	130
041	158282-9	CONNECTING ROD COMPLETE	300	096	266326-2	TAPPING SCREW 4X18	30
042	227532-4	SPIRAL BEVEL GEAR 31	1,800	097	158284-5	CHANGE LEVER COMPLETE	150
043	266420-0	TAPPING SCREW 5X20	30	101	419976-4	HANDLE	870
044	234019-9	COMPRESSION SPRING 4	30	102	911258-5	PAN HEAD SCREW M5X35	30
045	345814-3	LINK PLATE	80	103	266420-0	TAPPING SCREW 5X20	30
046	345815-1	GUIDE PLATE	80	104	863921-5	HR2810T NAME PLATE	
047	911118-1	PAN HEAD SCREW M4X12	30	105	419992-6	F/R CHANGE LEVER	80
048	213262-3	O RING 18	40	110	419990-0	SWITCH LEVER	110
049	162256-4	LINK LEVER COMPLETE	120	111	158281-1	SWITCH HOLDER COMPLETE	140
050	419988-7	FILTER CAP	80	112	650591-7	SWITCH	1,240
051	213218-6	O RING 16	20	113	419980-3	HANDLE COVER	540
052	443129-3	FILTER	90	114	266326-2	TAPPING SCREW 4X18	30
053	419987-9	CRANK CAP	100	115	691015-4	POWER SUPPLY CORD 0.75-2-2.5	740
054	213406-5	O RING 30	30	116	682573-1	CORD GUARD 10	80
055	158289-5	CRANK HOUSING COMPLETE	1,870	117	266326-2	TAPPING SCREW 4X18	30
056	324793-8	CRANK SHAFT	700	118	687169-3	STRAIN RELIEF	60
057	211232-6	BALL BEARING 6002LLU	510	130	194080-7	TOOL HOLDER SET	3,060
058	961055-9	RETAINING RING S-15	50	131	286263-4	CAP 35	110
059	233951-4	C. C. SPRING 16-26	60	132	233940-9	RING SPRING 19	60
060	223167-9	CLUTCH	250	133	418217-5	CHUCK COVER	140

SERVICE DRAWING

MODEL NO. HR2810T

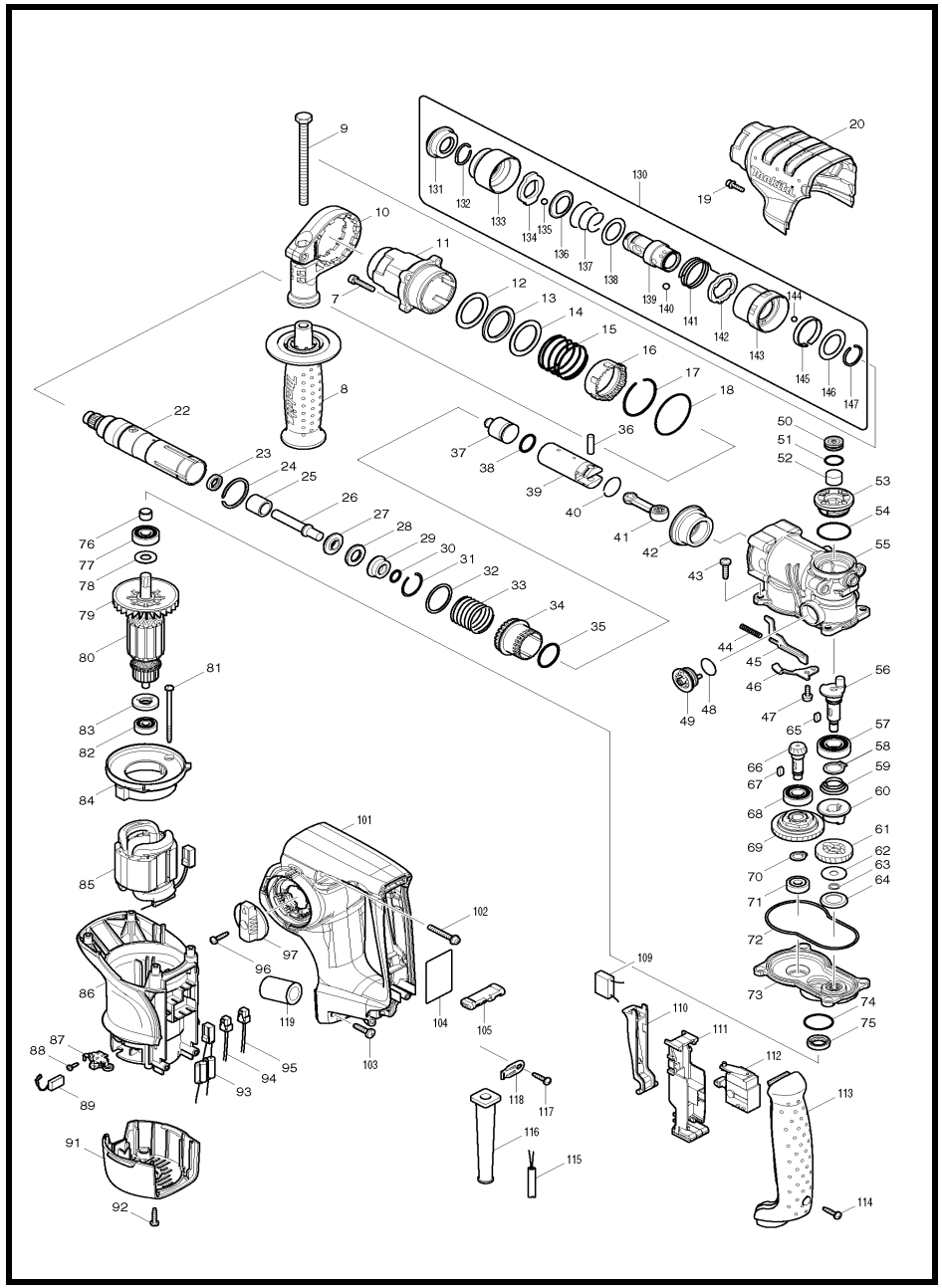

MODEL HR2810T

ITEM	PARTS ID	DESCRIPTION	PRICE/BAHT
134	345333-9	STOPPER	110
135	216022-2	STEEL BALL 7.0	20
136	345187-4	GUIDE WASHER	90
137	233916-6	CONICAL COMP. SPRING 21-29	30
138	267279-8	FLAT WASHER 21	50
139	324355-2	TOOL HOLDER	1,780
140	216013-3	STEEL BALL 6	50
141	231669-1	TORSION SPRING 31	60
142	345334-7	CHANGE RING	160
143	418218-3	CHANGE COVER	130
144	216018-3	STEEL BALL 5.0	20
145	345335-5	LEAF SPRING	80
146	267270-6	FLAT WASHER 24	80
147	233924-7	RING SPRING 21	50
A01	324219-0	DEPTH GAUGE	100
A04	194079-2	DRILL CHUCK SET	6,560

SERVICE DRAWING

MODEL NO. HR2811F

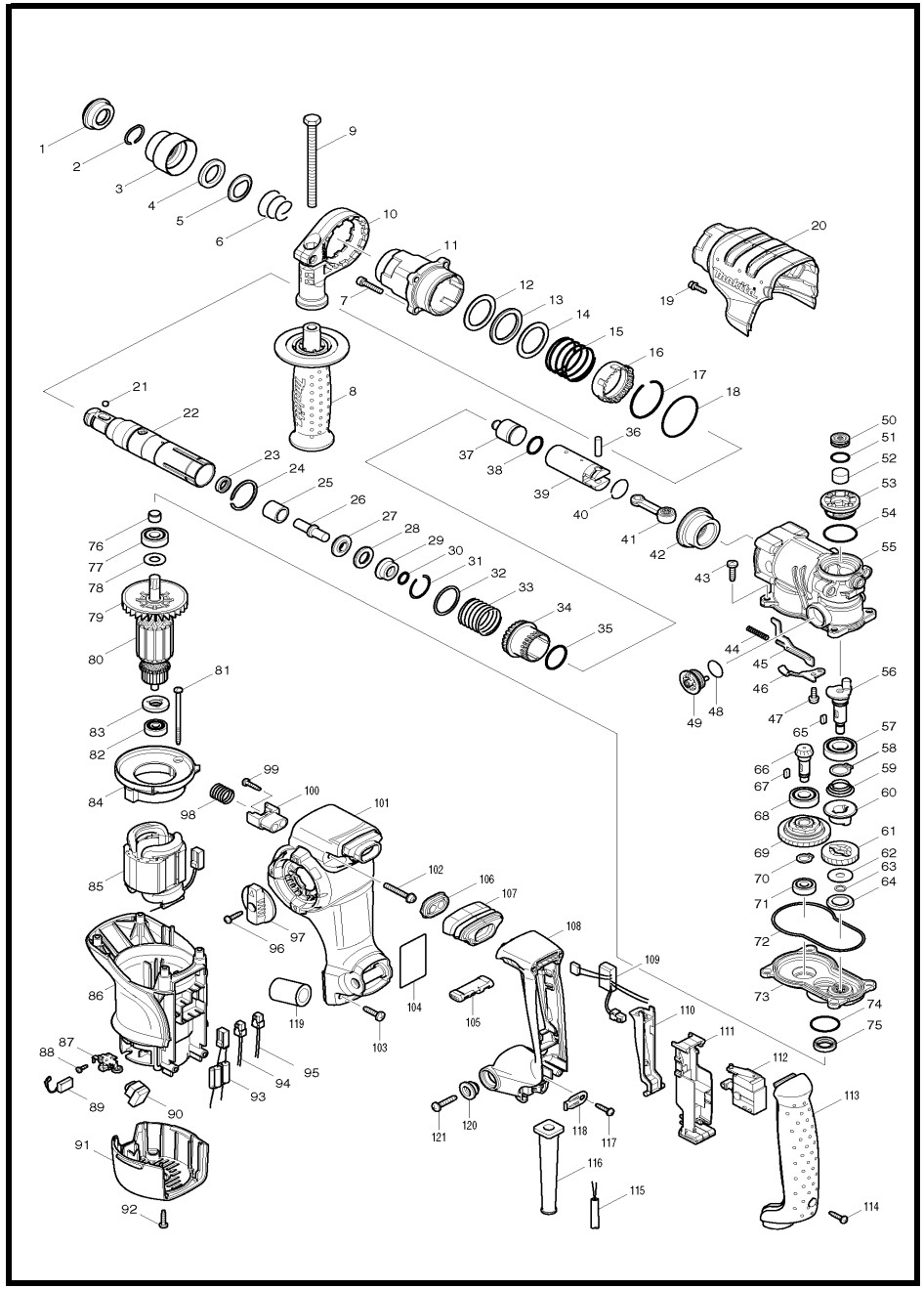

MODEL HR2811F

ITEM	PARTS ID	DESCRIPTION	PRICE/BAHT	ITEM	PARTS ID	DESCRIPTION	PRICE/BAHT
001	286263-4	CAP 35	110	054	213406-5	O RING 30	30
002	233940-9	RING SPRING 19	60	055	158289-5	CRANK HOUSING COMPLETE	1,870
003	417629-9	CHUCK COVER	110	056	324793-8	CRANK SHAFT	700
004	257241-1	RING 21	130	057	211232-6	BALL BEARING 6002LLU	510
005	345187-4	GUIDE WASHER	90	058	961055-9	RETAINING RING S-15	50
006	233916-6	CONICAL COMP. SPRING 21-29	30	059	233951-4	C. C. SPRING 16-26	60
007	922241-7	HEX. SOCKET HEAD BOLT M5X25	90	060	223167-9	CLUTCH	250
008	158057-6	GRIP 36 COMPLETE	350	061	226653-9	HELICAL GEAR 29	490
009	921919-9	HEX. BOLT M8X110	210	062	267353-2	FLAT WASHER 8	50
010	419975-6	GRIP BASE 20	210	063	961034-7	RETAINING RING	60
011	158288-7	BARREL COMPLETE	820	064	345818-5	CUP WASHER 16	50
012	267354-0	FLAT WASHER 31	80	065	254239-9	KEY 4	100
013	262133-1	URETHANE RING 31	300	066	227524-3	SPIRAL BEVEL GEAR 9	940
014	267354-0	FLAT WASHER 31	80	067	254239-9	KEY 4	100
015	234020-4	COMPRESSION SPRING 37	70	068	210105-0	BALL BEARING 6001LLU	360
016	419986-1	LOCK SLEEVE	100	069	125386-2	TORQUE LIMITTER ASS'Y	2,880
017	233952-2	RING SPRING 41	40	070	961006-2	RETAINING RING S-10	20
018	213620-3	O RING 46	80	071	210024-0	BALL BEARING 608LLU	240
019	922128-3	HEX. SOCKET HEAD BOLT M4X16	30	072	424028-8	SEAL RING	60
020	419984-5	CRANK HOUSING COVER	310	073	158287-9	GEAR HOUSING COMPLETE	620
021	216022-2	STEEL BALL 7.0	20	074	213445-5	O-RING 26	30
022	123191-1	TOOL HOLDER ASSEMBLY	3,100	075	213133-4	OIL SEAL 12	360
023	213344-1	OIL SEAL 9	280	076	331775-3	SLEEVE 10	120
024	961140-8	RETAINING RING	90	077	210054-1	BALL BEARING 6000LLU	370
025	331769-8	SLEEVE 9	170	078	253171-4	FLAT WASHER 10	50
026	324669-9	IMPACT BOLT	160	080	515293-1	ARMATURE ASS'Y 220V	
027	324402-9	RING 10	150	081	266325-4	TAPPING SCREW 4X70	30
028	421955-0	CUSHION RING 13	100	082	210023-2	BALL BEARING 627DDW	210
029	324216-6	O RING CASE	280	083	681656-4	INSULATION WASHER	60
030	213073-6	O RING 9	110	084	419989-5	BUFFLE PLATE	130
031	233917-4	RING SPRING 28	40	085	526583-7	FIELD ASS'Y 220V	
032	267105-1	FLAT WASHER 29	120	086	419982-9	MOTOR HOUSING	580
033	234021-2	COMPRESSION SPRING 30	70	087	643766-5	BRUSH HOLDER	180
034	331770-3	DRIVING SLEEVE	1,490	088	266421-8	TAPPING SCREW 3X10	30
035	213435-8	O RING 26	60	089	195001-2	CARBON BRUSH SET CB-325	
036	256099-5	PIN 6	80	090	631754-4	LED CIRCUIT	400
037	324733-6	STRIKER	160	091	419983-7	REAR COVER	390
038	213227-5	O RING 16	100	092	266326-2	TAPPING SCREW 4X18	30
039	331776-1	PISTON CYLINDER	1,120	094	638567-4	LEAD UNIT	130
040	233954-8	RING SPRING 21	30	095	638566-6	LEAD UNIT	130
041	158282-9	CONNECTING ROD COMPLETE	300	096	266326-2	TAPPING SCREW 4X18	30
042	227532-4	SPIRAL BEVEL GEAR 31	1,800	097	158284-5	CHANGE LEVER COMPLETE	150
043	266420-0	TAPPING SCREW 5X20	30	098	234022-0	COMPRESSION SPRING 14	70
044	234019-9	COMPRESSION SPRING 4	30	099	266326-2	TAPPING SCREW 4X18	30
045	345814-3	LINK PLATE	80	100	419995-0	SPRING GUIDE	130
046	345815-1	GUIDE PLATE	80	101	419979-8	HANDLE BASE	1,010
047	911118-1	PAN HEAD SCREW M4X12	30	102	911258-5	PAN HEAD SCREW M5X35	30
048	213262-3	O RING 18	40	103	266420-0	TAPPING SCREW 5X20	30
049	162256-4	LINK LEVER COMPLETE	120	104	863925-7	HR2811F NAME PLATE	90
050	419988-7	FILTER CAP	80	105	419992-6	F/R CHANGE LEVER	80
051	213218-6	O RING 16	20	106	419994-2	DUST COVER SUPPORT	100
052	443129-3	FILTER	90	107	424029-6	DUST COVER	110
053	419987-9	CRANK CAP	100	108	419978-0	HANDLE	390

SERVICE DRAWING

MODEL NO. HR2811F

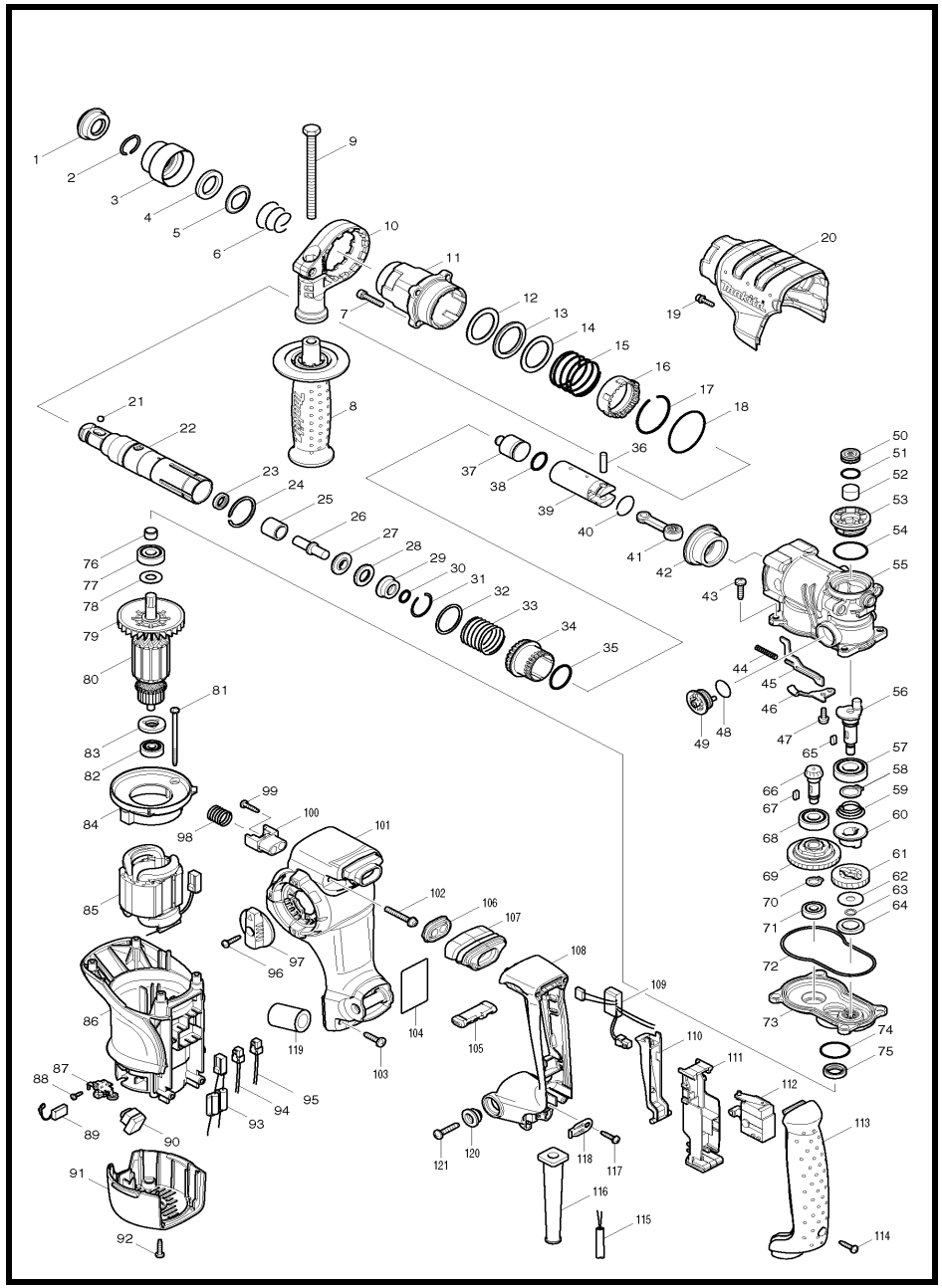

MODEL HR2811F

ITEM	PARTS ID	DESCRIPTION	PRICE/BAHT
109	631753-6	POWER SUPPLY CIRCUIT	410
110	419990-0	SWITCH LEVER	110
111	158281-1	SWITCH HOLDER COMPLETE	140
112	650591-7	SWITCH	1,240
113	419980-3	HANDLE COVER	540
114	266326-2	TAPPING SCREW 4X18	30
115	691015-4	POWER SUPPLY CORD 0.75-2-2.5	740
116	682573-1	CORD GUARD 10	80
117	266326-2	TAPPING SCREW 4X18	30
118	687169-3	STRAIN RELIEF	60
119	685722-9	SPONGE	50
120	313139-3	SHOULDER SLEEVE 6	150
121	266041-8	TAPPING SCREW 5X25	60
A01	324219-0	DEPTH GAUGE	100

SERVICE DRAWING

MODEL NO. HR2811FT

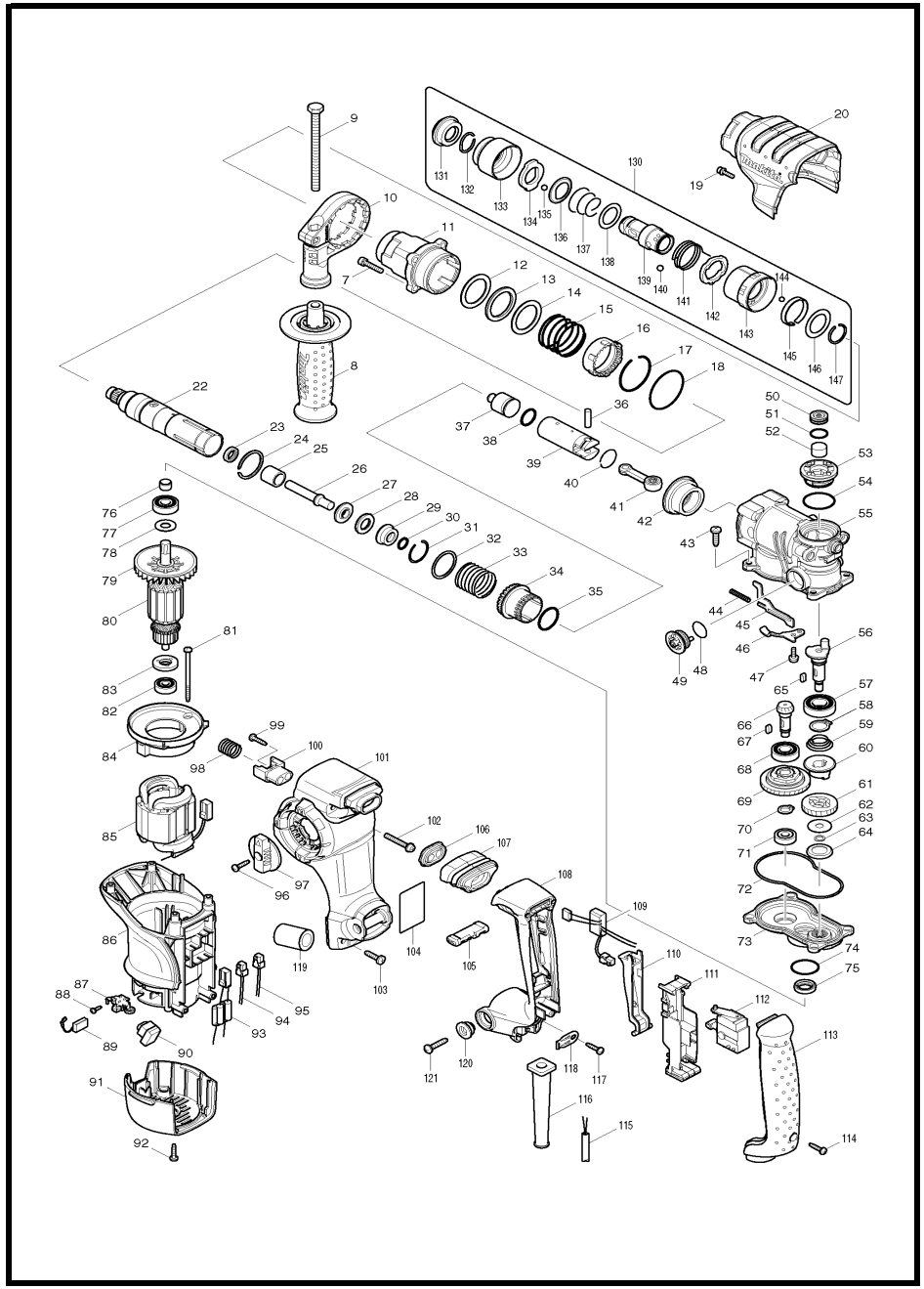

MODEL HR2811FT

ITEM	PARTS ID	DESCRIPTION	PRICE/BAHT	ITEM	PARTS ID	DESCRIPTION	PRICE/BAHT
007	922241-7	HEX. SOCKET HEAD BOLT M5X25	90	061	226653-9	HELICAL GEAR 29	490
008	158057-6	GRIP 36 COMPLETE	350	062	267353-2	FLAT WASHER 8	50
009	921919-9	HEX. BOLT M8X110	210	063	961034-7	RETAINING RING	60
010	419975-6	GRIP BASE 20	210	064	345818-5	CUP WASHER 16	50
011	158288-7	BARREL COMPLETE	820	065	254239-9	KEY 4	100
012	267354-0	FLAT WASHER 31	80	066	227524-3	SPIRAL BEVEL GEAR 9	940
013	262133-1	URETHANE RING 31	300	067	254239-9	KEY 4	100
014	267354-0	FLAT WASHER 31	80	068	210105-0	BALL BEARING 6001LLU	360
015	234020-4	COMPRESSION SPRING 37	70	069	125386-2	TORQUE LIMITTER ASS'Y	2,880
016	419986-1	LOCK SLEEVE	100	070	961006-2	RETAINING RING S-10	20
017	233952-2	RING SPRING 41	40	071	210024-0	BALL BEARING 608LLU	240
018	213620-3	O RING 46	80	072	424028-8	SEAL RING	60
019	922128-3	HEX. SOCKET HEAD BOLT M4X16	30	073	158287-9	GEAR HOUSING COMPLETE	620
020	419984-5	CRANK HOUSING COVER	310	074	213445-5	O-RING 26	30
022	158286-1	TOOL HOLDER GUIDE COMPLETE	4,490	075	213133-4	OIL SEAL 12	360
023	213344-1	OIL SEAL 9	280	076	331775-3	SLEEVE 10	120
024	961140-8	RETAINING RING	90	077	210054-1	BALL BEARING 6000LLU	370
025	331769-8	SLEEVE 9	170	078	253171-4	FLAT WASHER 10	50
026	324796-2	IMPACT BOLT	200	080	515293-1	ARMATURE ASS'Y 220V	
027	324402-9	RING 10	150	081	266325-4	TAPPING SCREW 4X70	30
028	421955-0	CUSHION RING 13	100	082	210023-2	BALL BEARING 627DDW	210
029	324216-6	O RING CASE	280	083	681656-4	INSULATION WASHER	60
030	213073-6	O RING 9	110	084	419989-5	BUFFLE PLATE	130
031	233917-4	RING SPRING 28	40	085	526583-7	FIELD ASS'Y 220V	
032	267105-1	FLAT WASHER 29	120	086	419982-9	MOTOR HOUSING	580
033	234021-2	COMPRESSION SPRING 30	70	087	643766-5	BRUSH HOLDER	180
034	331770-3	DRIVING SLEEVE	1,490	088	266421-8	TAPPING SCREW 3X10	30
035	213435-8	O RING 26	60	089	195001-2	CARBON BRUSH SET CB-325	
036	256099-5	PIN 6	80	090	631754-4	LED CIRCUIT	400
037	324733-6	STRIKER	160	091	419983-7	REAR COVER	390
038	213227-5	O RING 16	100	092	266326-2	TAPPING SCREW 4X18	30
039	331776-1	PISTON CYLINDER	1,120	093	638565-8	LEAD UNIT	190
040	233954-8	RING SPRING 21	30	094	638567-4	LEAD UNIT	130
041	158282-9	CONNECTING ROD COMPLETE	300	095	638566-6	LEAD UNIT	130
042	227532-4	SPIRAL BEVEL GEAR 31	1,800	096	266326-2	TAPPING SCREW 4X18	30
043	266420-0	TAPPING SCREW 5X20	30	097	158284-5	CHANGE LEVER COMPLETE	150
044	234019-9	COMPRESSION SPRING 4	30	098	234022-0	COMPRESSION SPRING 14	70
045	345814-3	LINK PLATE	80	099	266326-2	TAPPING SCREW 4X18	30
046	345815-1	GUIDE PLATE	80	100	419995-0	SPRING GUIDE	130
047	911118-1	PAN HEAD SCREW M4X12	30	101	419979-8	HANDLE BASE	1,010
048	213262-3	O RING 18	40	102	911258-5	PAN HEAD SCREW M5X35	30
049	162256-4	LINK LEVER COMPLETE	120	103	266420-0	TAPPING SCREW 5X20	30
050	419988-7	FILTER CAP	80	105	419992-6	F/R CHANGE LEVER	80
051	213218-6	O RING 16	20	106	419994-2	DUST COVER SUPPORT	100
052	443129-3	FILTER	90	107	424029-6	DUST COVER	110
053	419987-9	CRANK CAP	100	108	419978-0	HANDLE	390
054	213406-5	O RING 30	30	109	631753-6	POWER SUPPLY CIRCUIT	410
055	158289-5	CRANK HOUSING COMPLETE	1,870	110	419990-0	SWITCH LEVER	110
056	324793-8	CRANK SHAFT	700	111	158281-1	SWITCH HOLDER COMPLETE	140
057	211232-6	BALL BEARING 6002LLU	510	112	650591-7	SWITCH	1,240
058	961055-9	RETAINING RING S-15	50	113	419980-3	HANDLE COVER	540
059	233951-4	C. C. SPRING 16-26	60	114	266326-2	TAPPING SCREW 4X18	30
060	223167-9	CLUTCH	250	115	691015-4	POWER SUPPLY CORD 0.75-2-2.5	740

SERVICE DRAWING

MODEL NO. HR2811FT

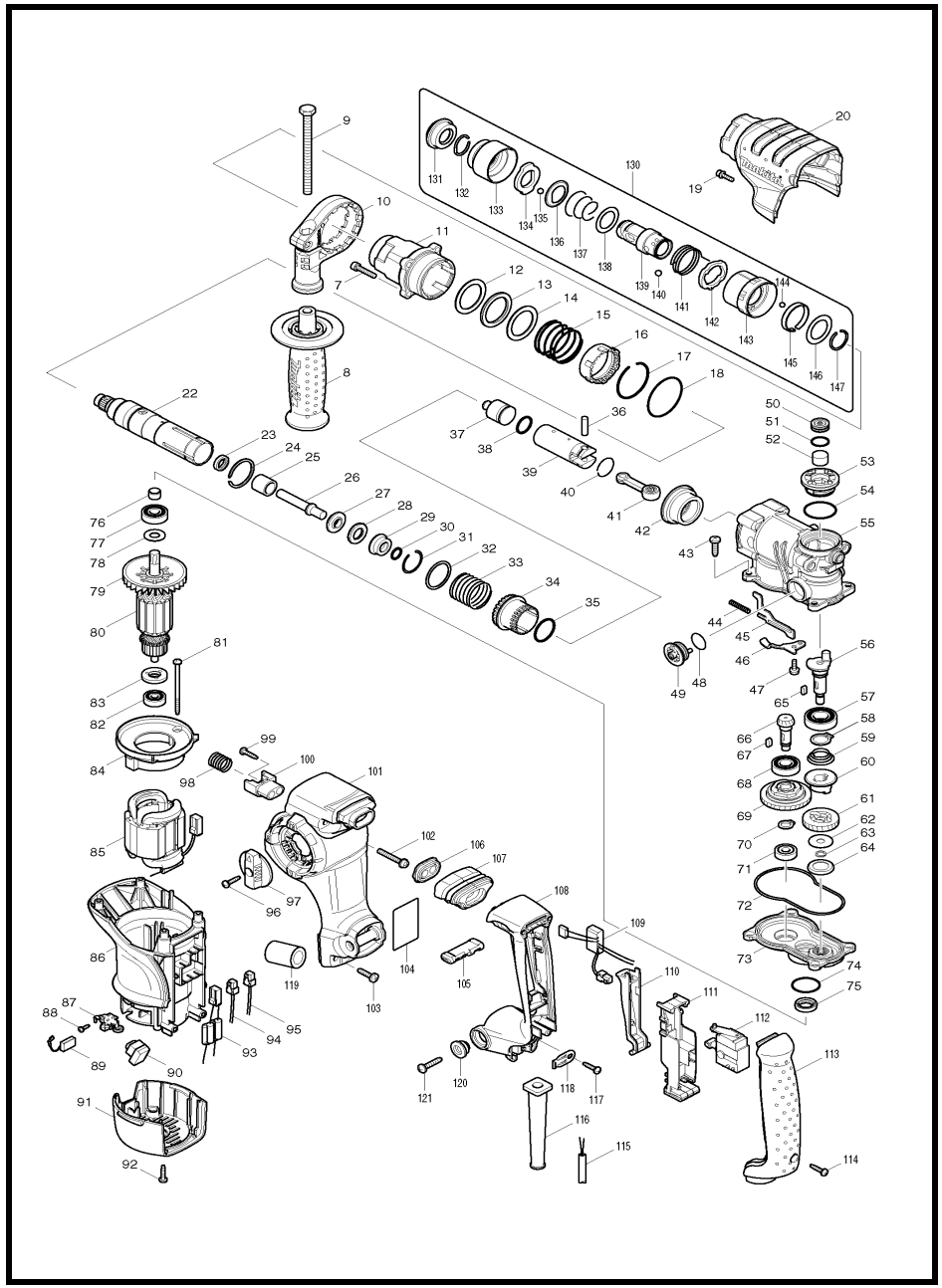

MODEL HR2811FT

ITEM	PARTS ID	DESCRIPTION	PRICE/BAHT
116	682573-1	CORD GUARD 10	80
117	266326-2	TAPPING SCREW 4X18	30
118	687169-3	STRAIN RELIEF	60
119	685722-9	SPONGE	50
120	313139-3	SHOULDER SLEEVE 6	150
121	266041-8	TAPPING SCREW 5X25	60
130	194080-7	TOOL HOLDER SET	3,060
131	286263-4	CAP 35	110
132	233940-9	RING SPRING 19	60
133	418217-5	CHUCK COVER	140
134	345333-9	STOPPER	110
135	216022-2	STEEL BALL 7.0	20
136	345187-4	GUIDE WASHER	90
137	233916-6	CONICAL COMP. SPRING 21-29	30
138	267279-8	FLAT WASHER 21	50
139	324355-2	TOOL HOLDER	1,780
140	216013-3	STEEL BALL 6	50
141	231669-1	TORSION SPRING 31	60
142	345334-7	CHANGE RING	160
143	418218-3	CHANGE COVER	130
144	216018-3	STEEL BALL 5.0	20
145	345335-5	LEAF SPRING	80
146	267270-6	FLAT WASHER 24	80
147	233924-7	RING SPRING 21	50
A01	324219-0	DEPTH GAUGE	100
A04	194079-2	DRILL CHUCK SET	6,560

SERVICE DRAWING

MODEL NO. HR3000C

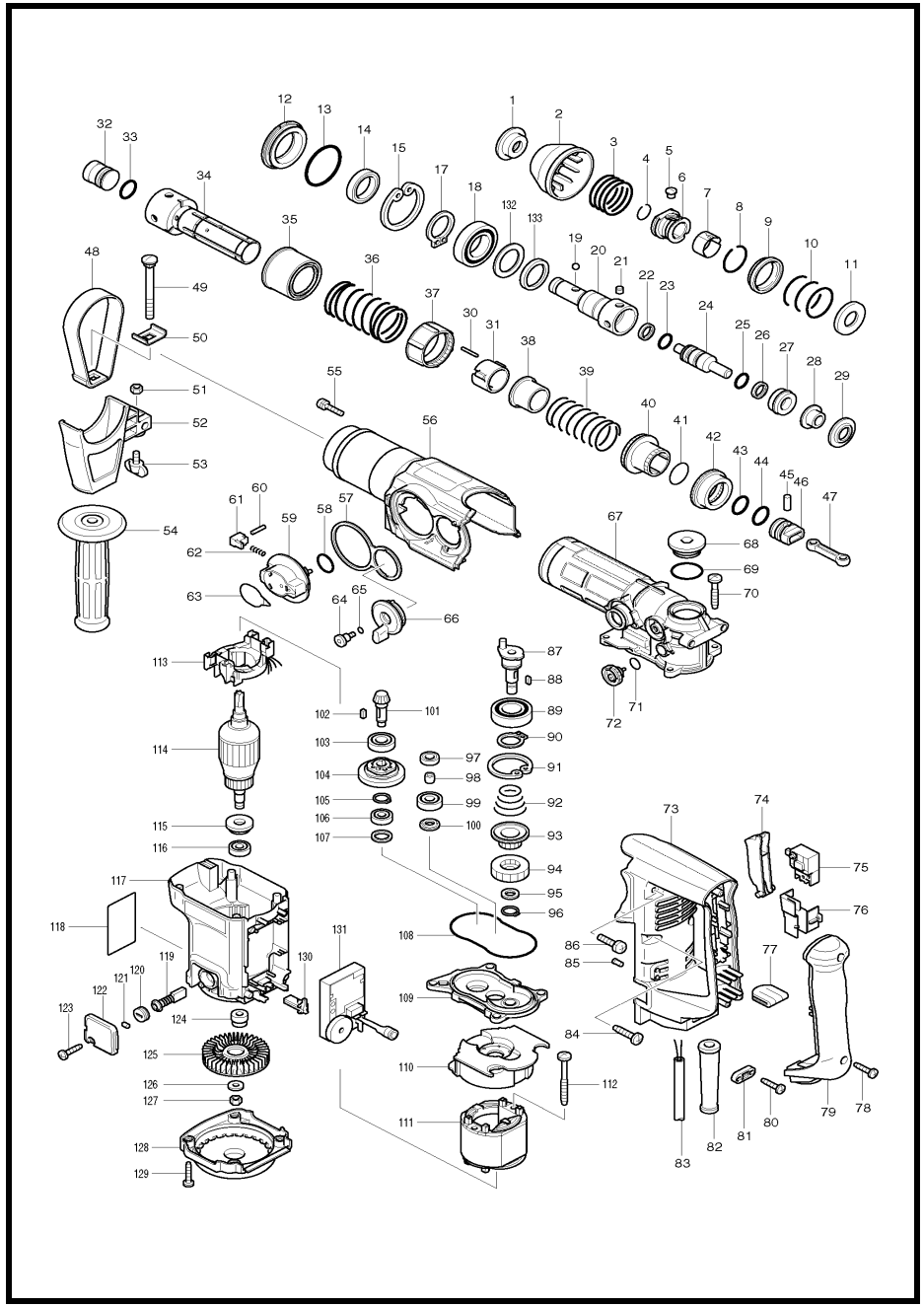

MODEL HR3000C

ITEM	PARTS ID	DESCRIPTION	PRICE/BAHT	ITEM	PARTS ID	DESCRIPTION	PRICE/BAHT
001	286253-7	CAP 40	110	055	911118-1	PAN HEAD SCREW M4X12	30
002	417027-7	CHUCK COVER	230	056	151697-9	CRANK HOUSING COVER COMPLETE	1,370
003	233203-3	COMPRESSION SPRING 38	70	057	421704-5	DUSTPROOF WASHER	250
004	231979-6	RING SPRING 17	50	058	213304-3	O RING 20	40
005	256447-8	PIN 8	190	059	151693-7	CHANGE LEVER COMPLETE	390
006	323820-8	CHUCK RING	620	060	256219-1	PIN 4	60
007	232190-3	LEAF SPRING 26	270	061	417018-8	LOCK BUTTON	150
008	231936-4	RING SPRING 30.5	60	062	233188-3	COMPRESSION SPRING 2.4	60
009	323819-3	SPRING GUIDE	130	063	816329-2	INDICATION LABEL	120
010	233234-2	COMPRESSION SPRING 35	60	064	265077-4	HEX. SOCKET FLAT HEAD SCREW M5	220
011	344841-7	GUIDE WASHER	130	065	213023-1	O RING 4	20
012	417015-4	SEAL CASE	230	066	151694-5	SHIFT LEVER COMPLETE	390
013	213615-6	O RING 46	90	067	151709-8	CRANK HOUSING COMPLETE	5,460
014	213436-6	OIL SEAL 28	250	068	416124-6	CRANK CAP	150
015	962251-2	RETAINING RING R-52	150	069	213406-5	O RING 30	30
017	961108-4	RETAINING RING S-28	120	070	266173-1	TAPPING SCREW 5X30	60
018	211422-1	BALL BEARING 60/28LLU	690	071	213070-2	O RING 10	20
019	216022-2	STEEL BALL 7.0	20	072	151758-5	SPUR GEAR 21 COMPLETE	290
020	323912-3	TOOL HOLDER	2,500	073	417014-6	HANDLE	1,230
021	256293-9	PIN 8	80	074	416284-4	SWITCH LEVER	130
022	213321-3	FLUORO CARBON RESIN RING 20	550	075	651922-3	SWITCH TG71B	850
023	213228-3	O RING 15	90	076	416126-2	LEAD GUIDE	140
024	323913-1	IMPACT BOLT	640	077	421583-1	SPONGE SHEET	40
025	213228-3	O RING 15	90	078	265995-6	TAPPING SCREW 4X18	40
026	213321-3	FLUORO CARBON RESIN RING 20	550	079	417028-5	HANDLE COVER	1,320
027	421830-0	RUBBER RING 13	430	080	265995-6	TAPPING SCREW 4X18	40
028	331555-7	SLEEVE 12	190	081	687053-2	STRAIN RELIEF	70
029	267753-6	WASHER 19	350	082	682560-0	CORD GUARD 10	170
030	256176-3	PIN 2.5	40	083	691025-1	POWER SUPPLY CORD 0.75-2-5.0	1,070
031	418023-8	PIN HOLDER	150	084	266021-4	TAPPING SCREW 5X20	60
032	323936-9	STRIKER	460	085	416285-2	ACRYLIC PIN 5	60
033	213274-6	O RING 18	90	086	911233-1	PAN HEAD SCREW M5X20	30
034	331559-9	CYLINDER 25	7,790	087	323915-7	CRANK SHAFT	1,760
035	331563-8	SLEEVE 50	890	088	254239-9	KEY 4	100
036	233253-8	COMPRESSION SPRING 40	140	089	211332-2	BALL BEARING 6004LLU	410
037	417020-1	LOCK SLEEVE	180	090	961060-6	RETAINING RING S-20	50
038	331557-3	RING 29	680	091	962211-4	RETAINING RING R-42	150
039	233254-6	COMPRESSION SPRING 34	60	092	231991-6	CONICAL COMP. SPRING 21-31	90
040	331558-1	DRIVING SLEEVE	1,580	093	223130-2	CLUTCH	1,120
041	213435-8	O RING 26	60	094	226514-3	HELICAL GEAR 34	960
042	226783-6	SPIRAL BEVEL GEAR 37	1,620	095	253878-2	FLAT WASHER 10	60
043	213274-6	O RING 18	90	096	961006-2	RETAINING RING S-10	20
044	213274-6	O RING 18	90	097	213071-0	OIL SEAL 10	410
045	256292-1	PIN 7	90	098	331564-6	SLEEVE 10	420
046	417021-9	PISTON	290	099	210058-3	BALL BEARING 6000LU	300
047	417016-2	ROD	160	100	253171-4	FLAT WASHER 10	50
048	344811-6	GRIP SPRING 63	390	101	226782-8	SPIRAL BEVEL GEAR 10	860
049	266163-4	CUP SQUARE NECK BOLT M8X80	230	102	254202-2	KEY 4	90
050	344492-6	PLATE	120	103	211138-8	BALL BEARING 6001LLU	320
051	931302-2	HEX. NUT M6	70	104	152955-6	TORQUE LIMITER COMPLETE	3,750
052	417026-9	SIDE GRIP BASE 63	380	105	961006-2	RETAINING RING S-10	20
053	265701-9	SCREW M6X14	100	106	210024-0	BALL BEARING 608LLU	240
054	152554-4	GRIP 36 COMPLETE	660	107	253314-8	THIN WASHER 15	80

SERVICE DRAWING

MODEL NO. HR3000C

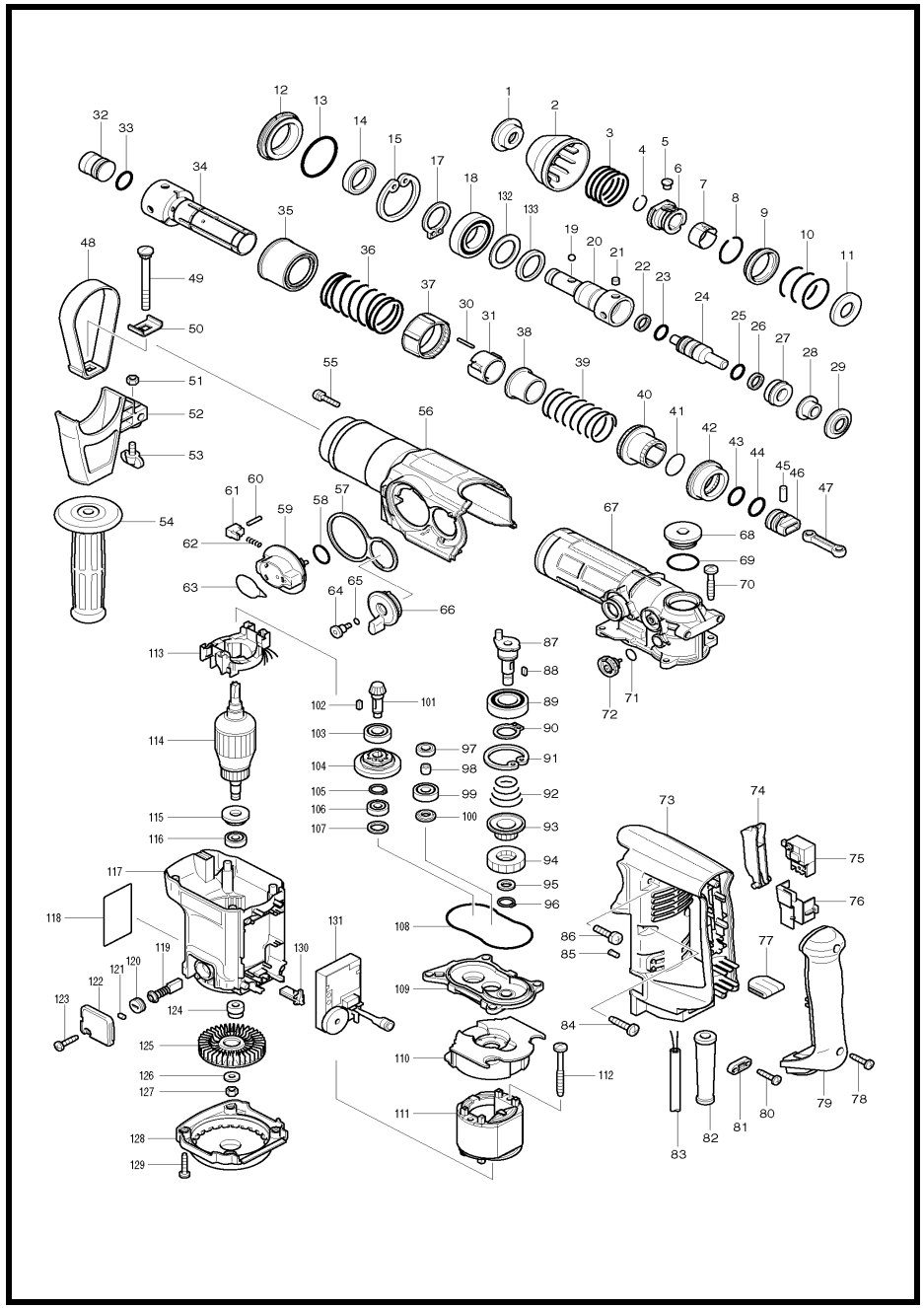

MODEL HR3000C

ITEM	PARTS ID	DESCRIPTION	PRICE/BAHT
108	421702-9	SEAL RING	150
109	151695-3	GEAR HOUSING COMPLETE	1,700
110	417010-4	BAFFLE PLATE	270
111	634348-4	FIELD 220-240V	
112	266046-8	TAPPING SCREW 5X50	100
113	632933-7	SUPPORT COMPLETE	360
114	513518-7	ARMATURE ASS'Y 220-240V	
115	681650-6	INSULATION WASHER	390
116	210005-4	BALL BEARING 608DDW	240
117	151840-0	MOTOR HOUSING COMPLETE	2,380
118	851772-8	NAME PLATE HR3000C	150
119	B-80385	CARBON BRUSH SET CB-327A	
120	643750-0	BRUSH HOLDER CAP	70
121	263002-9	RUBBER PIN 4	30
122	417024-3	BRUSH HOLDER COVER	150
123	265995-6	TAPPING SCREW 4X18	40
124	324261-1	SHOULDER SLEEVE 7	180
126	941151-9	FLAT WASHER 6	30
127	252153-3	HEX. NUT M6-10	70
128	417012-0	REAR COVER	460
129	265995-6	TAPPING SCREW 4X18	40
130	417017-0	FIX ROD	160
131	631369-7	CONTROLLER	3,820
132	267088-5	FLAT WASHER 28	230
133	262088-0	URETHANE RING 28	190
134	253133-2	FLAT WASHER 7	50
A01	181573-3	GREASE VESSEL 93G	240
A02	321248-4	DEPTH GAUGE	200
B01	134889-5	GRIP 36 ASS'Y	1,440

SERVICE DRAWING

MODEL NO. HR3520

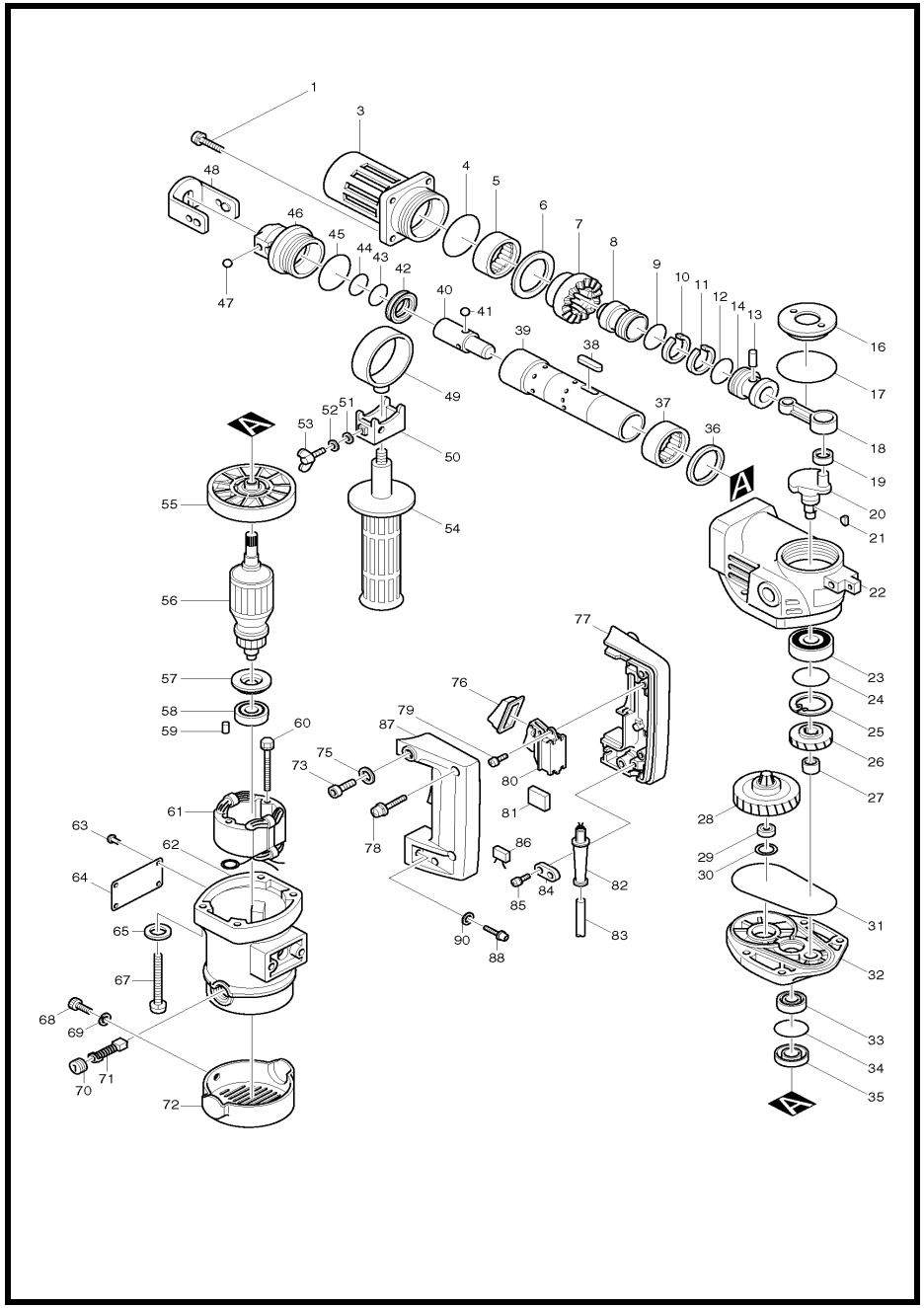

MODEL HR3520

ITEM	PARTS ID	DESCRIPTION	PRICE/BAHT
001	922341-3	HEX. SOCKET HEAD BOLT M6X25	90
003	311612-7	BARREL	2,580
004	213655-4	O RING 56	80
005	212502-6	NEEDLE BEARING 4016	730
006	253817-2	FLAT WASHER 40	400
007	221367-5	SPIRAL BEVEL GEAR 36	1,950
008	322806-9	STRIKER	720
009	213381-5	O RING 21	140
010	412037-9	PISTON RING 29	630
011	412037-9	PISTON RING 29	630
012	213381-5	O RING 21	140
013	256006-8	PIN 8	110
014	322196-0	PISTON	710
016	411662-3	CRANK CAP	390
017	213554-0	O RING 44	80
018	315248-4	ROD	810
019	212065-2	NEEDLE BEARING 1012	560
020	321725-6	CRANK SHAFT	1,200
021	254002-0	WOODRUFF KEY 3	80
022	159507-4	CRANK HOUSING	3,410
023	211281-3	BALL BEARING 6203LLU	520
024	213507-9	O RING 40	70
025	962157-4	RETAINING RING R-40	110
026	221676-2	HELICAL GEAR 36	590
027	212005-0	NEEDLE BEARING 810	240
028	151176-7	TORQUE LIMITER COMPLETE	7,210
029	211034-0	BALL BEARING 608	280
030	253314-8	THIN WASHER 15	80
031	421688-7	SEAL RING	120
032	157304-2	GEAR HOUSING	1,440
033	211109-5	BALL BEARING 6201	270
034	213459-4	O RING 32	50
035	213160-1	OIL SEAL 14	590
036	267060-7	FLAT WASHER 35	410
037	212502-6	NEEDLE BEARING 4016	730
038	254231-5	KEY 4	100
039	152338-0	CYLINDER LINER COMPLETE	7,450
040	322237-2	IMPACT BOLT	1,900
041	216004-4	STEEL BALL 7.9	50
042	213383-1	X RING 25	880
043	213374-2	O RING 23.5	100
044	213374-2	O RING 23.5	100
045	213554-0	O RING 44	80
046	322327-1	TOOL HOLDER	3,100
047	216004-4	STEEL BALL 7.9	50
048	165227-0	TOOL RETAINER	1,750
049	164569-9	GRIP HOLDER	750
050	164543-7	GRIP BASE	360
051	261049-7	RUBBER WASHER 5.5	50
052	261049-7	RUBBER WASHER 5.5	50
053	924321-5	WING BOLT M6X18	110
054	273472-4	GRIP 32	800
056	512818-2	ARMATURE ASS'Y 220V	
057	681625-5	INSULATION WASHER	50
058	211033-2	BALL BEARING 608LB	200
059	263014-2	RUBBER PIN 4	40
060	265345-5	+ HEX. BOLT M5X60	130
061	522513-6	FIELD ASS'Y 220V	
062	183383-4	MOTOR HOUSING	2,030
063	953106-2	RIVET 0-5	20
064	855125-3	NAME PLATE HR3520	140
065	941152-7	FLAT WASHER 6	50
067	922371-4	HEX. SOCKET HEAD BOLT M6X50	110
068	922221-3	HEX. SOCKET HEAD BOLT M5X16	60
069	942101-7	SPRING WASHER 5	100
070	643600-9	BRUSH HOLDER CAP 6-10	70
071	B-80307	CARBON BRUSH SET CB-105A	
072	284056-3	REAR COVER	590
073	922336-6	HEX. SOCKET HEAD BOLT M6X22	90
075	941152-7	FLAT WASHER 6	50
076	421265-5	DUST COVER	190
077	181653-5	HANDLE SET	850
078	911243-8	PAN HEAD SCREW M5X25	30
079	911129-6	PAN HEAD SCREW M4X16	50
080	651145-3	SWITCH C3D-H-MS	1,730
082	682505-8	CORD GUARD 10-90	150
083	691227-9	POWER SUPPLY CORD 1.25-2-5.0	1,290
084	687000-3	STRAIN RELIEF	40
085	911133-5	PAN HEAD SCREW M4X18	50
087	181653-5	HANDLE SET	850
088	922341-3	HEX. SOCKET HEAD BOLT M6X25	90
090	941152-7	FLAT WASHER 6	50
400	783202-0	HEX. WRENCH 4	70
402	321248-4	DEPTH GAUGE	200
408	835274-2	INNER CASE	660
902	782407-9	LOCK NUT WRENCH 35	320
903	242021-8	OIL VESSEL	100

SERVICE DRAWING

MODEL NO. HR3530

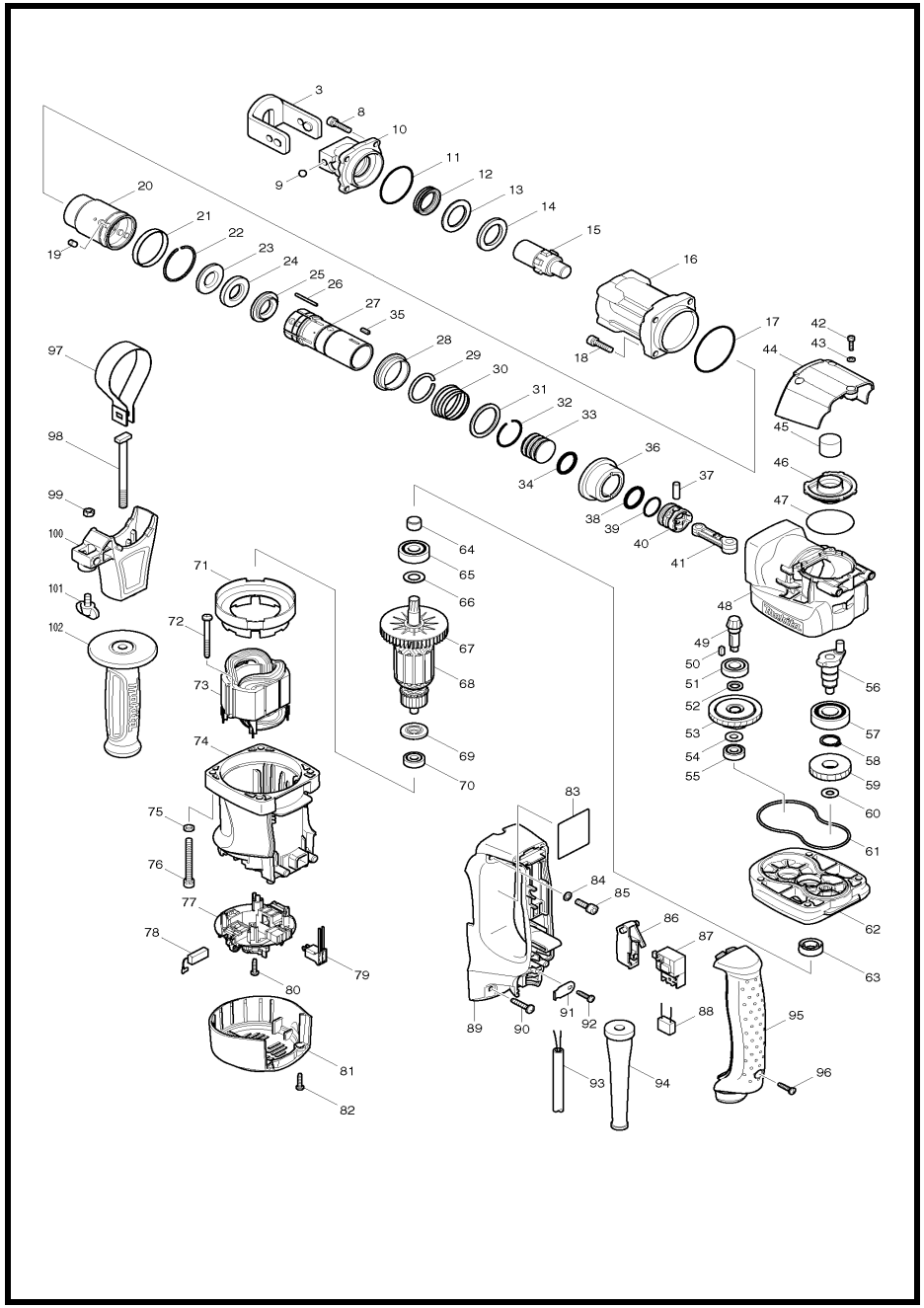

MODEL HR3530

ITEM	PARTS ID	DESCRIPTION	PRICE/BAHT
003	165227-0	TOOL RETAINER	1,750
008	265914-2	HEX. SOCKET HEAD BOLT M6X25	90
009	216004-4	STEEL BALL 7.9	50
010	324771-8	TOOL HOLDER	4,330
011	213569-7	O RING 45	80
012	213383-1	X RING 25	880
013	261137-0	NYLON WASHER 26	150
014	267350-8	FLAT WASHER 26	520
015	324772-6	IMPACT BOLT	1,490
016	158240-5	BARREL COMPLETE	2,020
017	213655-4	O RING 56	80
018	265914-2	HEX. SOCKET HEAD BOLT M6X25	90
019	256266-2	PIN 6	50
020	331765-6	CYLINDER A	2,930
021	257287-7	RING 44	640
022	233958-0	RING SPRING 41	90
023	324773-4	WASHER 17	420
024	262131-5	NYLON RING 18	230
025	324774-2	SHOULDER WASHER 18	460
026	268182-6	PIN 3	50
027	331806-8	CYLINDER B	3,290
028	331767-2	RING 34	440
029	233935-2	RING SPRING 32	40
030	233959-8	C. C. SPRING 35-40	200
031	267339-6	FLAT WASHER 34	240
032	233935-2	RING SPRING 32	40
033	324775-0	STRIKER	360
034	213962-5	O RING 22	170
035	254236-5	KEY 3	90
036	227516-2	SPIRAL BEVEL GEAR 39	1,340
037	256197-5	PIN 7	70
038	213962-5	O RING 22	170
039	213379-2	O RING 21	30
040	419004-5	PISTON	150
041	419878-4	CONNECTING ROD	590
042	266148-0	HEX. SOCKET HEAD BOLT M4X14	80
043	941052-1	FLAT WASHER 4	20
044	419880-7	CRANK CAP COVER	650
045	443127-7	FILTER	80
046	419879-2	CRANK CAP	480
047	213606-7	O RING 48	80
048	158241-3	CRANK HOUSING COMPLETE	3,480
049	227515-4	SPIRAL BEVEL GEAR 9	780
050	254239-9	KEY 4	100
051	211138-8	BALL BEARING 6001LLU	320
052	267347-7	FLAT WASHER 10	130
053	125399-3	TORQUE LIMITER ASS'Y	3,070
054	253139-0	FLAT WASHER 8	50
055	210005-4	BALL BEARING 608DDW	240
056	324776-8	CRANK SHAFT	910
057	211281-3	BALL BEARING 6203LLU	520
058	961057-5	RETAINING RING S-17	40
059	226649-0	HELICAL GEAR 32	600
060	253865-1	FLAT WASHER 8	90
061	424022-0	SEAL RING	150
062	158242-1	GEAR HOUSING COMPLETE	2,050
063	213231-4	OIL SEAL 15	390
064	331596-3	SLEEVE 12	90
065	211137-0	BALL BEARING 6201LLU	380
066	253084-9	FLAT WASHER 12	40
067	241863-7	FAN 70	150
068	513723-6	ARMATURE ASS'Y 220V	
069	681644-1	INSULATION WASHER	60
070	210005-4	BALL BEARING 608DDW	240
071	419881-5	BAFFLE PLATE	230
072	266095-5	TAPPING SCREW 5X55	120
073	625778-0	FIELD 240V	
074	419882-3	MOTOR HOUSING	1,000
075	941151-9	FLAT WASHER 6	30
076	922381-1	HEX. SOCKET HEAD BOLT M6X60	
077	638501-4	BRUSH HOLDER UNIT	610
078	195004-6	CARBON BRUSH SET CB-350	
079	638507-2	LEAD UNIT	180
080	265995-6	TAPPING SCREW 4X18	40
081	419883-1	REAR COVER	310
082	265995-6	TAPPING SCREW 4X18	40
084	941152-7	FLAT WASHER 6	50
085	265905-3	HEX. SOCKET HEAD BOLT M6X20	110
086	418549-0	SWITCH LEVER	190
087	650677-7	SWITCH C3PA-1112	670
089	158243-9	HANDLE COMPLETE	830
090	266041-8	TAPPING SCREW 5X25	60
091	687169-3	STRAIN RELIEF	60
092	265995-6	TAPPING SCREW 4X18	40
093	691025-1	POWER SUPPLY CORD 0.75-2-5.0	1,070
094	682560-0	CORD GUARD 10	170
095	419677-4	HANDLE COVER	890
096	265995-6	TAPPING SCREW 4X18	40
097	345361-4	GRIP SPRING 60	360
098	266406-4	SQUARE BOLT M8X95	180
099	931302-2	HEX. NUT M6	70
100	419885-7	SIDE GRIP BASE 61	460
101	265701-9	SCREW M6X14	100
102	158131-0	GRIP 36 COMPLETE	770
A02	321248-4	DEPTH GAUGE	200

SERVICE DRAWING

MODEL NO. HR3850

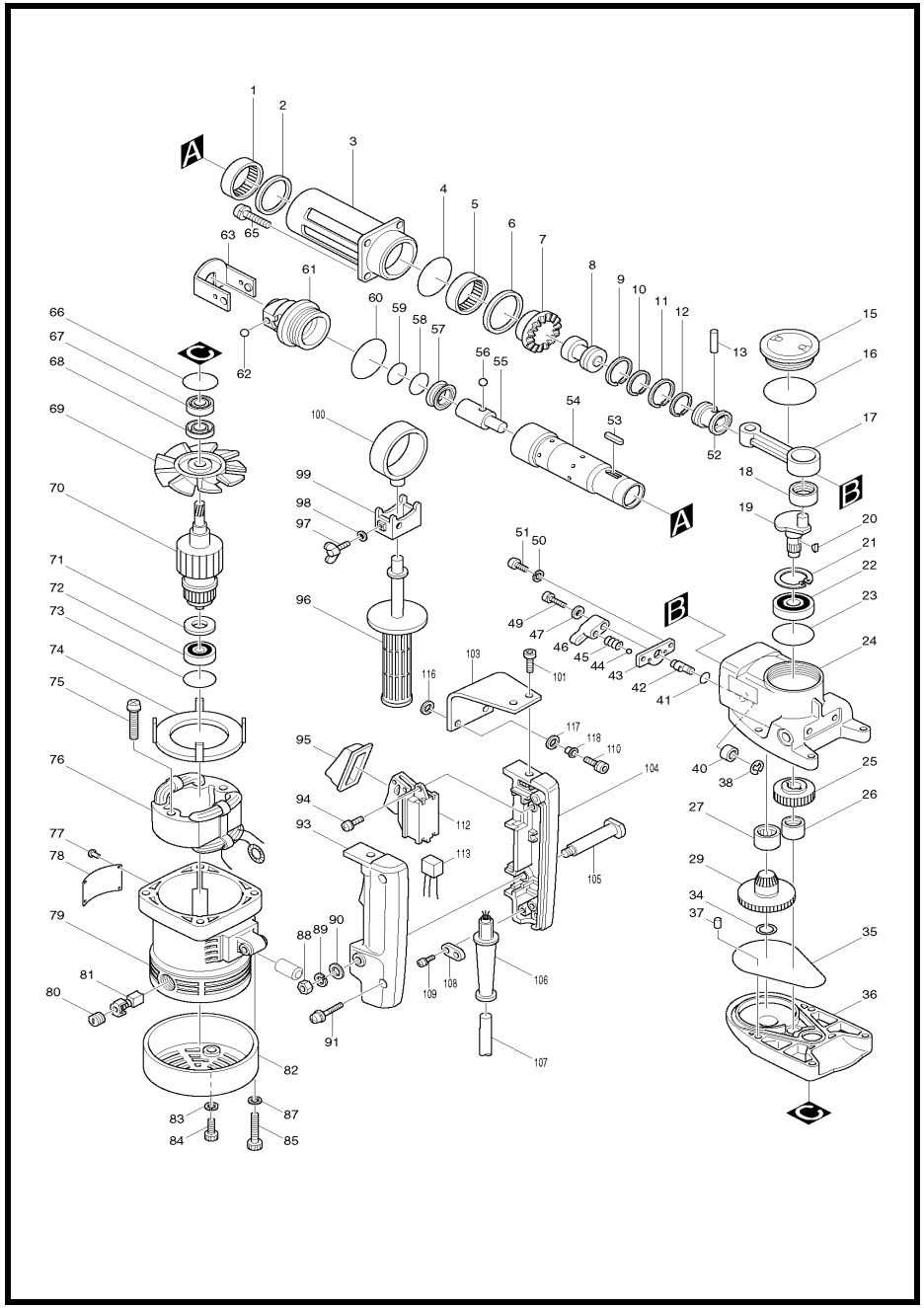

MODEL HR3850

ITEM	PARTS ID	DESCRIPTION	PRICE/BAHT
001	212551-3	NEEDLE BEARING 4516	1,230
002	267057-6	FLAT WASHER 40	530
003	311674-5	BARREL	3,510
004	213655-4	O RING 56	80
005	212551-3	NEEDLE BEARING 4516	1,230
006	253832-6	FLAT WASHER 45	410
007	221347-1	SPIRAL BEVEL GEAR 36	2,220
008	321369-2	STRIKER	870
009	412038-7	PISTON RING 34	560
010	412041-8	INNER RING 30	580
011	412038-7	PISTON RING 34	560
012	341743-8	INNER RING 30	270
013	256029-6	PIN 8	150
015	416136-9	CRANK CAP	430
016	213654-6	O RING 60	80
017	312956-8	ROD	970
018	212108-0	NEEDLE BEARING 1212	710
019	321726-4	CRANK SHAFT	1,660
020	254001-2	WOODRUFF KEY 4	80
021	962203-3	RETAINING RING R-47	120
022	211324-1	BALL BEARING 6204LLU	620
023	213606-7	O RING 48	80
024	157307-6	CRANK HOUSING COMPLETE	4,410
025	221689-3	HELICAL GEAR 33	910
026	212102-2	NEEDLE BEARING 1210	340
027	212359-5	NEEDLE BEARING 2216	710
029	134527-9	TORQUE LIMITER ASS'Y	11,460
034	253314-8	THIN WASHER 15	80
035	421689-5	SEAL RING	120
036	157306-8	GEAR HOUSING	2,160
037	263005-3	RUBBER PIN 6	30
038	961011-9	STOP RING E-4	20
040	212011-5	NEEDLE BEARING 609	490
041	213055-8	O RING 10	20
042	321727-2	CHANGE SHAFT	1,050
043	342786-3	PLATE	210
044	216002-8	STEEL BALL 4.8	20
045	231317-2	COMPRESSION SPRING 3	30
046	410331-3	CHANGE LEVER	100
047	941052-1	FLAT WASHER 4	20
049	922126-7	HEX. SOCKET HEAD BOLT M4X16	50
050	942101-7	SPRING WASHER 5	100
051	922212-4	HEX. SOCKET HEAD BOLT M5X12	30
052	321370-7	PISTON	780
053	254231-5	KEY 4	100
054	152335-6	CYLINDER LINER COMPLETE	8,340
055	322216-0	IMPACT BOLT	1,670
056	216004-4	STEEL BALL 7.9	50
057	213428-5	X RING 28	740
058	213411-2	O RING 27	80
059	213411-2	O RING 27	80
060	213604-1	O RING 50	90
061	322325-5	TOOL HOLDER	3,840
062	216004-4	STEEL BALL 7.9	50
063	165227-0	TOOL RETAINER	1,750
065	922341-3	HEX. SOCKET HEAD BOLT M6X25	90
066	213459-4	O RING 32	50
067	211109-5	BALL BEARING 6201	270
068	213160-1	OIL SEAL 14	590
070	514773-4	ARMATURE ASS'Y 220V	
071	681635-2	INSULATION WASHER	80
072	211087-9	BALL BEARING 6200DDW	380
073	213406-5	O RING 30	30
074	410163-8	BAFFLE PLATE	290
075	265347-1	+ HEX. BOLT M5X45	120
076	524633-2	FIELD ASS'Y 220V	
077	953106-2	RIVET 0-5	20
078	856978-3	NAME PLATE HR3850	170
079	159034-1	MOTOR HOUSING	2,690
080	643650-4	BRUSH HOLDER CAP 6.5-13.5	70
081	B-80335	CARBON BRUSH SET CB-155A	
082	284055-5	REAR COVER	510
083	942101-7	SPRING WASHER 5	100
084	922221-3	HEX. SOCKET HEAD BOLT M5X16	60
085	922376-4	HEX. SOCKET HEAD BOLT M6X55	120
087	941151-9	FLAT WASHER 6	30
088	931302-2	HEX. NUT M6	70
089	942151-2	SPRING WASHER 6	100
090	941151-9	FLAT WASHER 6	30
091	911243-8	PAN HEAD SCREW M5X25	30
093	182077-8	HANDLE SET	1,100
094	911129-6	PAN HEAD SCREW M4X16	50
095	421265-5	DUST COVER	190
096	273472-4	GRIP 32	800
097	924321-5	WING BOLT M6X18	110
098	261049-7	RUBBER WASHER 5.5	50
099	164543-7	GRIP BASE	360
100	164572-0	GRIP HOLDER	810
101	922316-2	HEX. SOCKET HEAD BOLT M6X14	90
103	343754-9	CUSHION PLATE	340
104	182077-8	HANDLE SET	1,100
105	321210-9	HANDLE SHAFT	170
106	682505-8	CORD GUARD 10-90	150
107	691227-9	POWER SUPPLY CORD 1.25-2-5.0	1,290
108	687000-3	STRAIN RELIEF	40
109	911133-5	PAN HEAD SCREW M4X18	50
110	265914-2	HEX. SOCKET HEAD BOLT M6X25	90
112	651145-3	SWITCH C3D-H-MS	1,730
116	262051-3	RUBBER RING 9	80
117	262052-1	RUBBER RING 9	50
118	257636-8	SLEEVE 6	170
401	321248-4	DEPTH GAUGE	200
403	783202-0	HEX. WRENCH 4	70
903	782407-9	LOCK NUT WRENCH 35	320
904	181490-7	HAMMER GREASE 30G	230

SERVICE DRAWING

MODEL NO. HR4000C

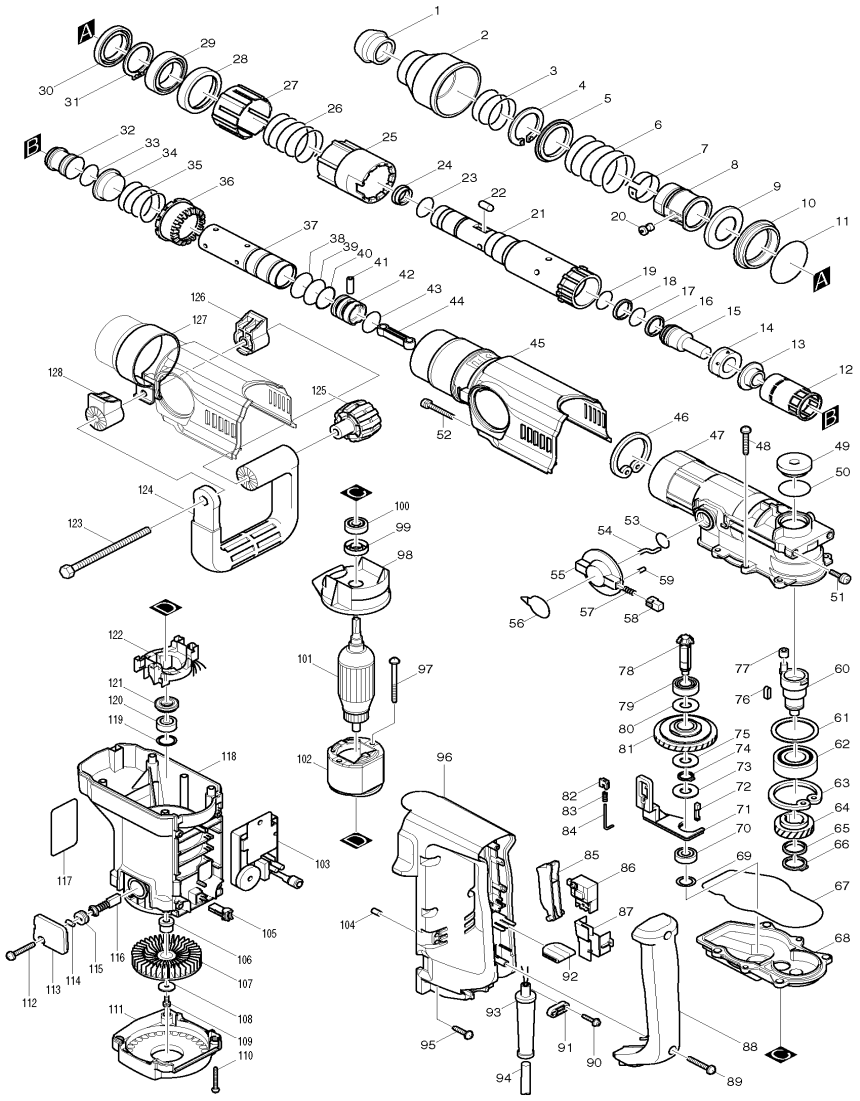

MODEL HR4000C

ITEM	PARTS ID	DESCRIPTION	PRICE/BAHT	ITEM	PARTS ID	DESCRIPTION	PRICE/BAHT
001	286247-2	TOOL HOLDER CAP	150	054	322962-5	CRANK PIN 4	140
002	416127-0	CHUCK COVER	250	055	416287-8	CHANGE LEVER	340
003	233178-6	COMPRESSION SPRING 46	90	056	816329-2	INDICATION LABEL	120
004	961176-7	RETAINING RING S-40	150	057	233188-3	COMPRESSION SPRING 2.4	60
005	344489-5	WASHER 40	370	058	417340-3	LOCK BUTTON	150
006	233179-4	COMPRESSION SPRING 50	100	059	256122-6	PIN 4	90
007	232171-7	LEAF SPRING 37	140	060	323929-6	CRANK SHAFT	2,360
008	322948-9	CHUCK RING	1,520	061	267169-5	FLAT WASHER 42	120
009	344488-7	CUP WASHER 32	130	062	211373-8	BALL BEARING 6205LLU	620
010	416283-6	SEAL CASE	190	063	962251-2	RETAINING RING R-52	150
011	213601-7	O RING 50	80	064	226479-9	HELICAL GEAR 37	830
012	416282-8	SLIDE SLEEVE	310	065	267121-3	FLAT WASHER 20	70
013	331505-2	SLEEVE 16	340	066	961060-6	RETAINING RING S-20	50
014	421582-3	RUBBER RING 17	620	067	421613-8	SEAL RING	120
015	322959-4	IMPACT BOLT	580	068	159949-2	GEAR HOUSING COMPLETE	2,000
016	213392-0	FLUORIDE RING 25	420	069	253314-8	THIN WASHER 15	80
017	213317-4	O RING 20	70	070	211031-6	BALL BEARING 608LLB	190
018	213392-0	FLUORIDE RING 25	420	071	416288-6	CHANGE LINK	290
019	213317-4	O RING 20	70	072	322951-0	CHANGE KEY	330
020	310052-6	SHOULDER PIN 8	190	073	253810-6	FLAT WASHER 12	90
021	322952-8	TOOL HOLDER	8,600	074	961052-5	RETAINING RING S-12	40
022	322908-1	ROLLER 8	160	075	267113-2	FLAT WASHER 12	30
023	231977-0	RING SPRING 25	50	076	254229-2	KEY 5	100
024	213271-2	DUST SEAL 18	80	077	257631-8	SLEEVE 7	480
025	416125-4	LOCK SLEEVE A	410	078	226746-2	STRAIGHT BEVEL GEAR 10	1,390
026	233177-8	COMPRESSION SPRING 44	90	079	211121-5	BALL BEARING 1207	610
027	416325-6	LOCK SLEEVE B	180	080	267113-2	FLAT WASHER 12	30
028	331510-9	BEARING HOLDER	380	081	159947-6	TORQUE LIMITER COMPLETE	4,820
029	211469-5	BALL BEARING 6907	1,050	082	416289-4	SLIDE PLATE	90
030	213480-3	OIL SEAL 35	320	083	233180-9	COMPRESSION SPRING 3	60
031	961153-9	RETAINING RING S-35	130	084	322963-3	GUIDE PIN 2	40
032	322960-9	STRIKER	490	085	416284-4	SWITCH LEVER	130
033	213370-0	O RING 22	50	086	651922-3	SWITCH TG71B	850
034	331509-4	RING 33	410	087	416126-2	LEAD GUIDE	140
035	233176-0	COMPRESSION SPRING 37	80	088	417165-5	HANDLE COVER	1,230
036	226745-4	STRAIGHT BEVEL GEAR 33	2,400	089	265995-6	TAPPING SCREW 4X18	40
037	331508-6	CYLINDER 28.5	2,640	090	265995-6	TAPPING SCREW 4X18	40
038	213406-5	O RING 30	30	091	687052-4	STRAIN RELIEF	80
039	213406-5	O RING 30	30	092	421583-1	SPONGE SHEET	40
040	213370-0	O RING 22	50	093	682560-0	CORD GUARD 10	170
041	256197-5	PIN 7	70	094	665883-1	POWER SUPPLY CORD 1.0-2-5.0	1,480
042	416122-0	PISTON	440	095	266021-4	TAPPING SCREW 5X20	60
043	213370-0	O RING 22	50	096	417164-7	HANDLE	1,090
044	416123-8	ROD	150	097	266044-2	TAPPING SCREW 5X60	130
045	151761-6	CRANK HOUSING COVER COMPLETE	950	098	416987-0	BAFFLE PLATE	230
046	962253-8	RETAINING RING R-56	190	099	213112-2	OIL SEAL 12	320
047	159948-4	CRANK HOUSING COMPLETE	5,500	100	210059-1	BALL BEARING 6000DDW	300
048	266012-5	TAPPING SCREW 5X35	60	101	516328-1	ARMATURE ASS'Y 220V	
049	416124-6	CRANK CAP	150	102	634298-3	FIELD 220V	
050	213406-5	O RING 30	30	103	631590-8	CONTROLLER	3,290
051	911233-1	PAN HEAD SCREW M5X20	30	104	416285-2	ACRYLIC PIN 5	60
052	911128-8	PAN HEAD SCREW M4X16	30	105	417715-6	FIX ROD	110
053	213304-3	O RING 20	40	106	322961-7	SLEEVE 7	180

SERVICE DRAWING

MODEL NO. HR4000C

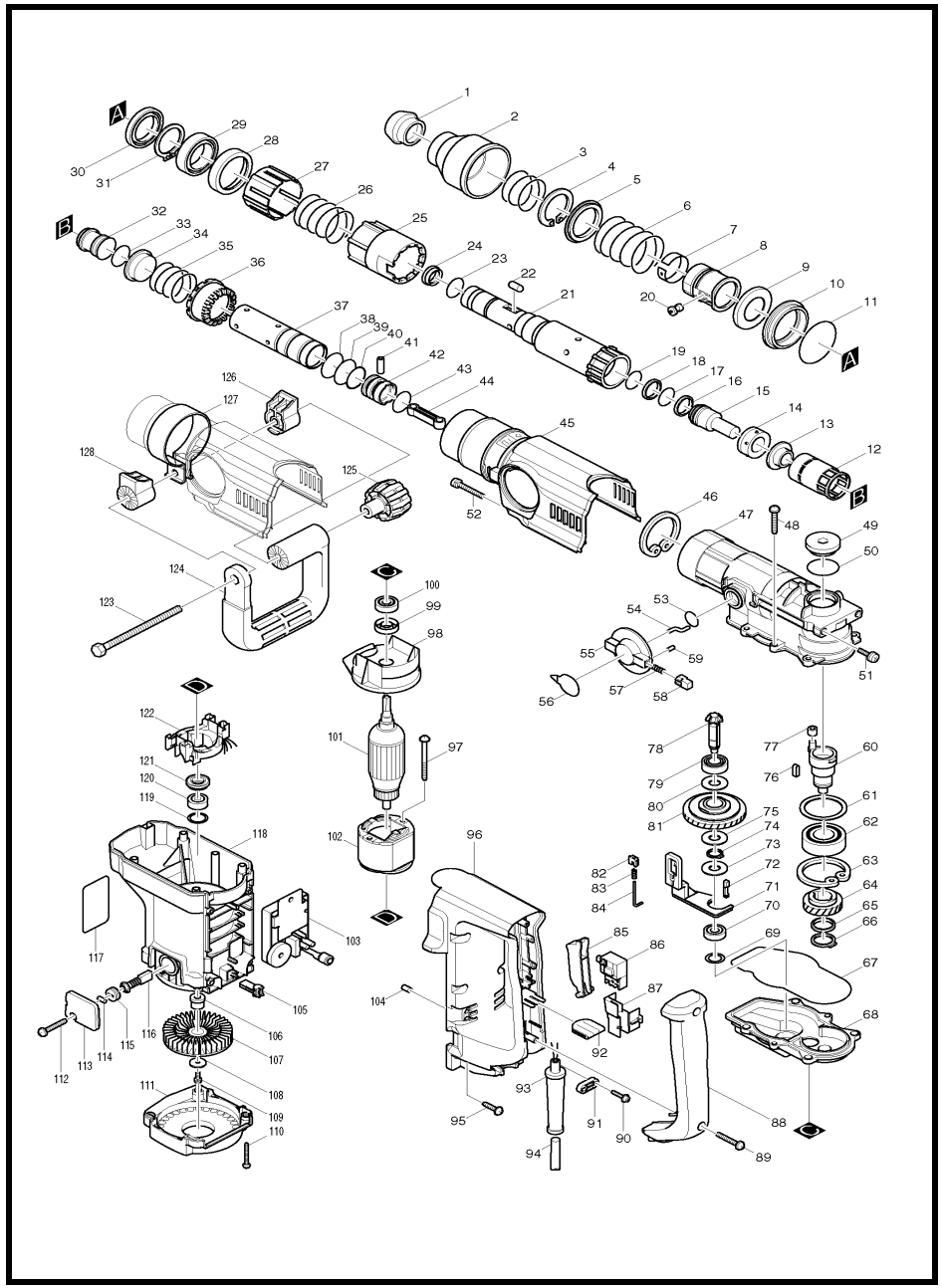

MODEL HR4000C

ITEM	PARTS ID	DESCRIPTION	PRICE/BAHT
108	253804-1	FLAT WASHER 6	40
109	931302-2	HEX. NUT M6	70
110	265995-6	TAPPING SCREW 4X18	40
111	416295-9	REAR COVER	550
112	265995-6	TAPPING SCREW 4X18	40
113	416292-5	BRUSH HOLDER COVER	130
114	263002-9	RUBBER PIN 4	30
115	643750-0	BRUSH HOLDER CAP	70
116	B-80385	CARBON BRUSH SET CB-327A	
118	159950-7	MOTOR HOUSING COMPLETE	2,280
119	253343-1	THIN WASHER 18	60
120	210005-4	BALL BEARING 608DDW	240
121	681650-6	INSULATION WASHER	390
122	632699-9	SUPPORT COMPLETE	520
123	265439-6	HEX. BOLT M8X150	190
124	417003-1	SIDE HANDLE	810
125	252640-2	WING NUT M8	380
126	416298-3	SIDE HANDLE BASE 68	
127	151769-0	SIDE HANDLE 68 COMPLETE	1,020
128	416298-3	SIDE HANDLE BASE 68	
130	421698-4	DUSTPROOF WASHER 55	210
131	417002-3	SIDE HANDLE CAM	150
A01	194683-7	GREASE VESSEL SET	520
A02	152554-4	GRIP 36 COMPLETE	660
A03	265701-9	SCREW M6X14	100
A04	266163-4	CUP SQUARE NECK BOLT M8X80	230
A05	321248-4	DEPTH GAUGE	200
A06	344491-8	GRIP SPRING 68	350
A07	344492-6	PLATE	120
A08	416299-1	SIDE GRIP BASE 68	260
A09	931302-2	HEX. NUT M6	70
B01	134890-0	SIDE HANDLE 68 ASS'Y	2,690
B02	134803-1	GRIP 36 ASS'Y	2,280
B03	134900-3	BEARING HOLDER ASS'Y	1,230

SERVICE DRAWING

MODEL NO. HR4001C

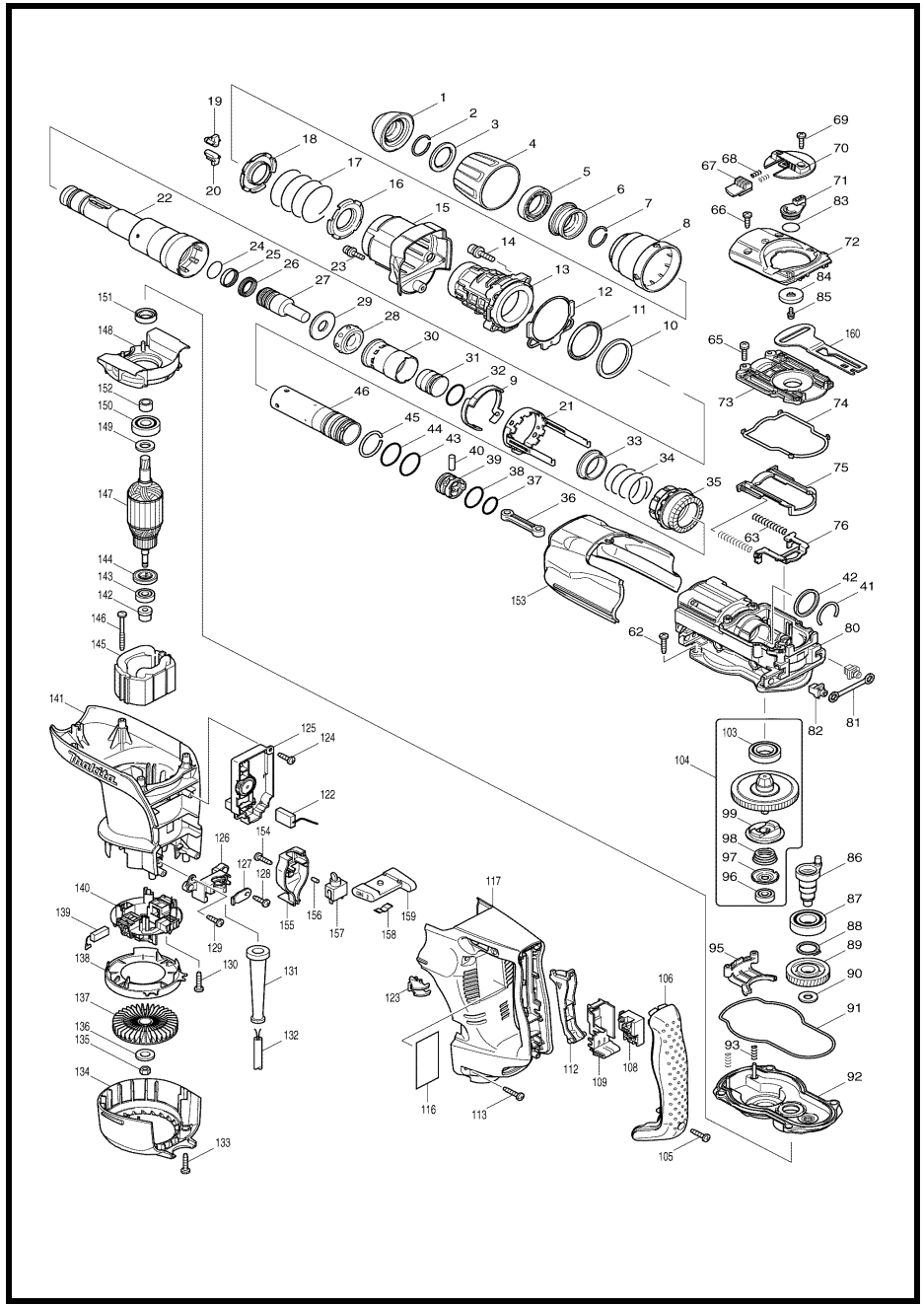

MODEL HR4001C

ITEM	PARTS ID	DESCRIPTION	PRICE/BAHT	ITEM	PARTS ID	DESCRIPTION	PRICE/BAHT
001	286285-4	TOOL HOLDER CAP	190	070	419020-7	CHANGE LEVER	320
002	231984-3	RING SPRING 25	110	071	419007-9	CRANK LEVER	150
003	267272-2	FLAT WASHER 28	160	072	317925-4	CRANK CAP COVER	670
004	419015-0	CHUCK COVER	190	073	419030-4	CRANK CAP	230
005	419002-9	SPACER	150	074	421908-9	SEAL RING	150
006	324548-1	CHUCK RING	380	075	419019-2	LINK PLATE GUIDE	160
007	231984-3	RING SPRING 25	110	076	345582-8	LINK PLATE	260
008	419016-8	RELEASE COVER	200	080	154625-3	CRANK HOUSING COMPLETE	4,870
009	419760-7	LOCK SLEEVE GUIDE	150	081	423345-3	CUSHION PLATE	80
010	267336-2	FLAT WASHER 45	120	082	419008-7	FIX GUIDE	70
011	262116-1	URETHAN RING 45	380	083	213262-3	O RING 18	40
012	421911-0	SEAL SHEET	150	084	419006-1	LINK LEVER	180
013	154621-1	BARREL COMPLETE	2,710	085	911511-9	PAN HEAD SCREW M4X10	60
014	922353-6	HEX.SOCKET HEAD BOLT M6X30	90	086	324550-4	CRANK SHAFT	680
015	154624-5	BARREL COVER COMPLETE	520	087	211332-2	BALL BEARING 6004LLU	410
016	345579-7	SPRING GUIDE	150	088	961060-6	RETAINING RING S-20	50
017	233431-0	COMPRESSION SPRING 48	80	089	226605-0	HELICAL GEAR 38	880
018	345579-7	SPRING GUIDE	150	090	253180-3	FLAT WASHER 10	80
019	310161-1	TOOL RETAINER	530	091	421907-1	SEAL RING	150
020	310161-1	TOOL RETAINER	530	092	154623-7	GEAR HOUSING COMPLETE	3,600
021	165446-8	LOCK SLEEVE	750	093	233433-6	COMPRESSION SPRING 5	30
022	324542-3	TOOL HOLDER	8,060	095	419018-4	CHANGE PLATE	140
023	266437-3	HEX. SOCKET HEAD BOLT M4X16	90	096	210005-4	BALL BEARING 608DDW	240
024	213317-4	O RING 20	70	097	345581-0	CUP WASHER 8	80
025	213392-0	FLUORIDE RING 25	420	098	233936-0	CONICAL COMPRESSIONSPRING19-27	40
026	213281-9	X-RING 18	230	099	324549-9	DRIVING FLANGE	470
027	324569-3	IMPACT BOLT	320	103	211323-3	BALL BEARING 6904LLU	690
028	421901-3	RUBBER RING 17	380	104	135508-6	TORQUE LIMITER ASS'Y	6,450
029	324573-2	RING 17	200	105	265995-6	TAPPING SCREW 4X18	40
030	419003-7	SLIDE SLEEVE	190	106	419036-2	HANDLE COVER	940
031	324571-6	STRIKER	220	108	650676-9	SWITCH C3PA-1111	680
032	213962-5	O RING 22	170	109	154626-1	SWITCH HOLDER COMPLETE	180
033	331709-6	RING 33	360	112	419028-1	SWITCH LEVER	180
034	233448-3	COMPRESSION SPRING 37	60	113	266041-8	TAPPING SCREW 5X25	60
035	227509-9	STRAIGHT BEVEL GEAR 25	1,780	116	861489-5	HR4001C NAME PLATE	80
036	419005-3	CONNECTING ROD	110	117	419039-6	HANDLE	1,050
037	213379-2	O RING 21	30	122	638407-6	LEAD UNIT	190
038	213962-5	O RING 22	170	123	419010-0	LENS	130
039	419004-5	PISTON	150	124	266192-7	TAPPING SCREW 4X14	50
040	256197-5	PIN 7	70	125	631657-2	CONTROLLER	3,090
041	233937-8	RING SPRING 31	30	126	419024-9	CORD CLAMP BASE	130
042	257268-1	RING 33	80	127	687169-3	STRAIN RELIEF	60
043	213406-5	O RING 30	30	128	266192-7	TAPPING SCREW 4X14	50
044	213406-5	O RING 30	30	129	266192-7	TAPPING SCREW 4X14	50
045	233935-2	RING SPRING 32	40	130	265995-6	TAPPING SCREW 4X18	40
046	324570-8	CYLINDER 28.5	3,880	131	682560-0	CORD GUARD 10	170
062	266041-8	TAPPING SCREW 5X25	60	132	691025-1	POWER SUPPLY CORD 0.75-2-5.0	1,070
063	233432-8	COMPRESSION SPRING 7	60	133	265995-6	TAPPING SCREW 4X18	40
065	911133-5	PAN HEAD SCREW M4X18	50	134	419032-0	REAR COVER	420
066	266192-7	TAPPING SCREW 4X14	50	135	931303-0	HEX. NUT M6	20
067	419009-5	LOCK BUTTON	110	136	253047-5	FLAT WASHER 6	40
068	233436-0	COMPRESSION SPRING 3	30	138	419022-3	FAN GUIDE	150
069	266192-7	TAPPING SCREW 4X14	50	139	195004-6	CARBON BRUSH SET CB-350	

SERVICE DRAWING

MODEL NO. HR4001C

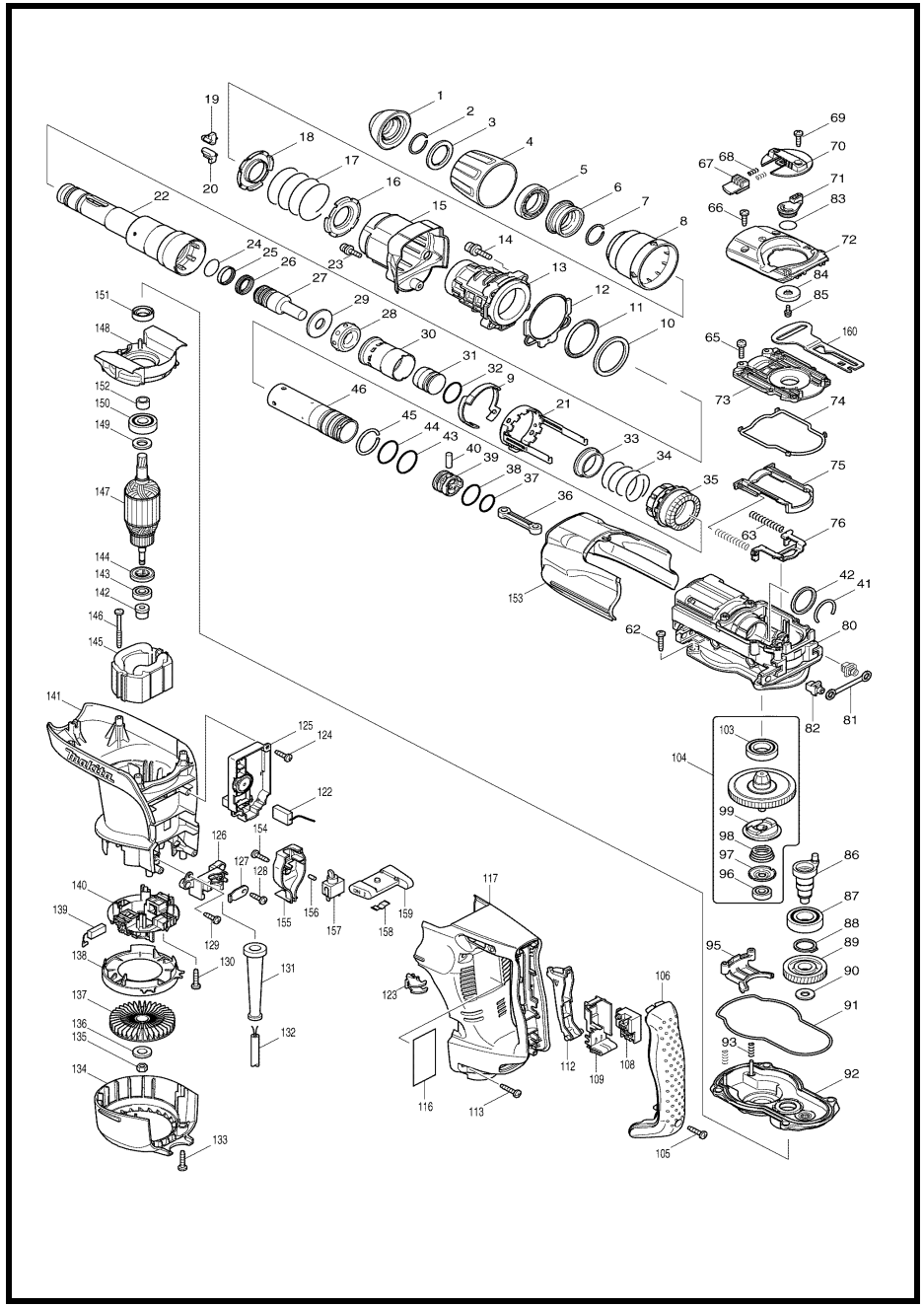

MODEL HR4001C

ITEM	PARTS ID	DESCRIPTION	PRICE/BAHT
140	638715-5	BRUSH HOLDER UNIT	540
141	154619-8	MOTOR HOUSING COMPLETE	1,530
142	324390-0	SHOULDER SLEEVE 6	200
143	210005-4	BALL BEARING 608DDW	240
144	681650-6	INSULATION WASHER	390
145	625758-6	FIELD 220-240V	
146	266095-5	TAPPING SCREW 5X55	120
147	513633-7	ARMATURE ASS'Y 220-240V	
148	419021-5	BAFFLE PLATE	180
149	253084-9	FLAT WASHER 12	40
150	211137-0	BALL BEARING 6201LLU	380
151	213231-4	OIL SEAL 15	390
152	331596-3	SLEEVE 12	90
153	419034-6	CRANK HOUSING COVER	560
154	266192-7	TAPPING SCREW 4X14	50
155	419026-5	SWITCH BOX	160
156	263027-3	RUBBER PIN 4	50
157	651418-4	SWITCH ST115A-40	350
158	232209-8	LEAF SPRING	90
159	154635-0	SLIDE LEVER COMPLETE	390
160	419027-3	CONTROL PLATE	90
161	421939-8	SPONGE SHEET	60
A01	134890-0	SIDE HANDLE 68 ASS'Y	2,690
A02	134803-1	GRIP 36 ASS'Y	2,280
A04	181573-3	GREASE VESSEL 93G	240
A05	443122-7	CLOTH	220

SERVICE DRAWING

MODEL NO. HR4002

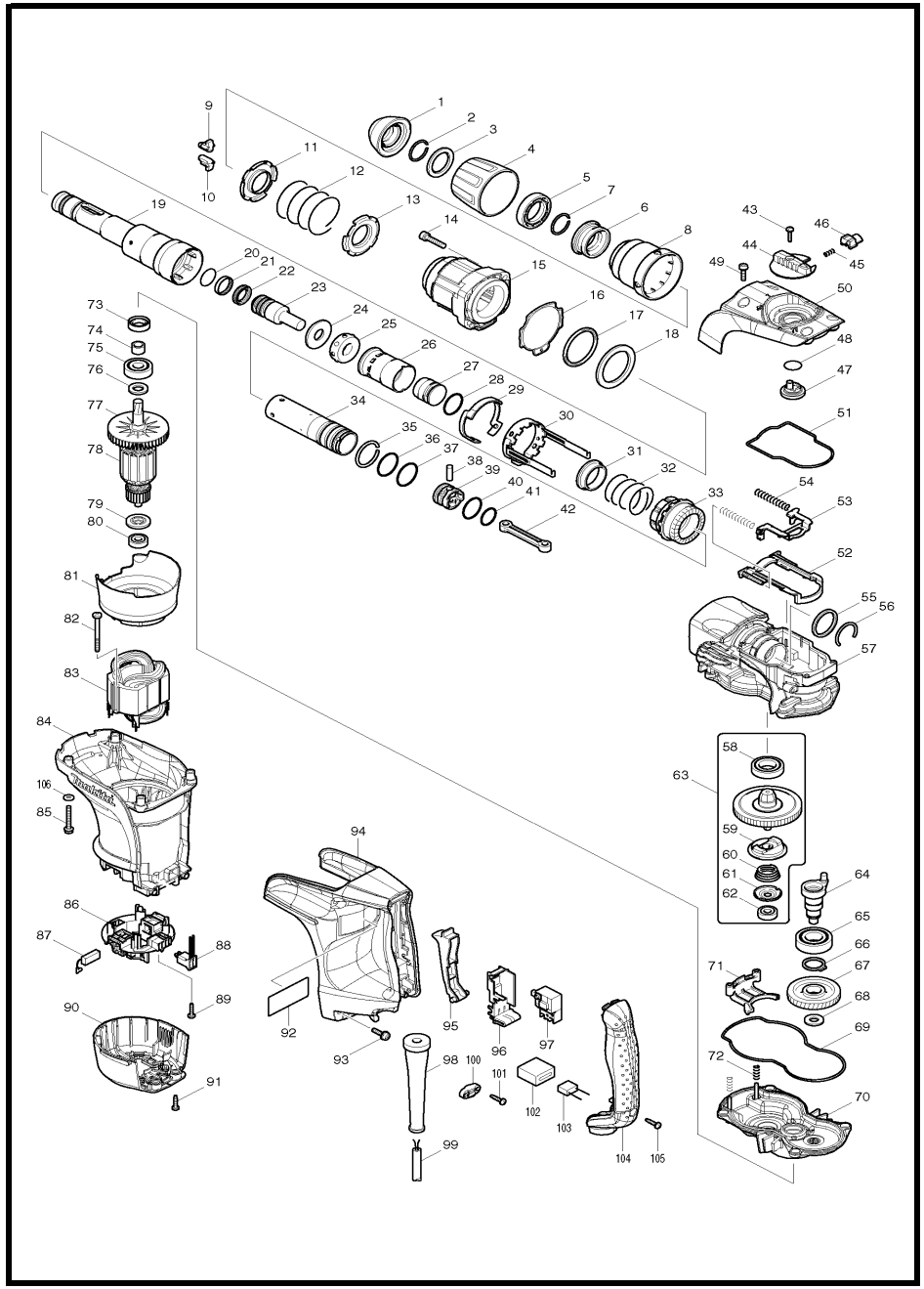

MODEL HR4002

ITEM	PARTS ID	DESCRIPTION	PRICE/BAHT	ITEM	PARTS ID	DESCRIPTION	PRICE/BAHT
001	286272-3	TOOL HOLDER CAP	170	054	233432-8	COMPRESSION SPRING 7	60
002	231984-3	RING SPRING 25	110	055	257268-1	RING 33	80
003	267272-2	FLAT WASHER 28	160	056	233937-8	RING SPRING 31	30
004	419015-0	CHUCK COVER	190	057	158231-6	CRANK HOUSING COMPLETE	1,970
005	419002-9	SPACER	150	058	211323-3	BALL BEARING 6904LLU	690
006	324548-1	CHUCK RING	380	059	324549-9	DRIVING FLANGE	470
007	231984-3	RING SPRING 25	110	060	233936-0	CONICAL COMPRESSIONSPRING19-27	40
008	419016-8	RELEASE COVER	200	061	345581-0	CUP WASHER 8	80
009	310161-1	TOOL RETAINER	530	062	210005-4	BALL BEARING 608DDW	240
010	310161-1	TOOL RETAINER	530	063	135508-6	TORQUE LIMITER ASS'Y	6,450
011	345579-7	SPRING GUIDE	150	064	324550-4	CRANK SHAFT	680
012	233431-0	COMPRESSION SPRING 48	80	065	211332-2	BALL BEARING 6004LLU	410
013	345579-7	SPRING GUIDE	150	066	961060-6	RETAINING RING S-20	50
014	922351-0	HEX. SOCKET HEAD BOLT M6X30	80	067	226648-2	HELICAL GEAR 46	550
015	141993-3	BARREL COMPLETE	2,030	068	253180-3	FLAT WASHER 10	80
016	424565-2	SEAL SHEET	80	069	424551-3	SEAL RING	240
017	262116-1	URETHAN RING 45	380	070	158232-4	GEAR HOUSING COMPLETE	940
018	267336-2	FLAT WASHER 45	120	071	419018-4	CHANGE PLATE	140
019	324542-3	TOOL HOLDER	8,060	072	233433-6	COMPRESSION SPRING 5	30
020	213317-4	O RING 20	70	073	213231-4	OIL SEAL 15	390
021	213392-0	FLUORIDE RING 25	420	074	331596-3	SLEEVE 12	90
022	213281-9	X-RING 18	230	075	211137-0	BALL BEARING 6201LLU	380
023	324569-3	IMPACT BOLT	320	076	253084-9	FLAT WASHER 12	40
024	324573-2	RING 17	200	077	241863-7	FAN 70	150
025	421901-3	RUBBER RING 17	380	078	513698-9	ARMATURE ASS'Y 220V	
026	419003-7	SLIDE SLEEVE	190	079	681644-1	INSULATION WASHER	60
027	324571-6	STRIKER	220	080	210005-4	BALL BEARING 608DDW	240
028	213962-5	O RING 22	170	081	419870-0	BAFFLE PLATE	170
029	419760-7	LOCK SLEEVE GUIDE	150	082	266418-7	TAPPING SCREW 5X55	40
030	165633-9	LOCK SLEEVE	1,220	083	625763-3	FIELD 220V	
031	331709-6	RING 33	360	084	419866-1	MOTOR HOUSING	790
032	233448-3	COMPRESSION SPRING 37	60	085	922256-4	HEX. SOCKET HEAD BOLT M5X35	90
033	227509-9	STRAIGHT BEVEL GEAR 25	1,780	086	638393-1	BRUSH HOLDER UNIT	540
034	326221-9	CYLINDER 28.5	1,170	087	195004-6	CARBON BRUSH SET CB-350	
035	233935-2	RING SPRING 32	40	088	638508-0	LEAD UNIT	130
036	213406-5	O RING 30	30	089	266326-2	TAPPING SCREW 4X18	30
037	213406-5	O RING 30	30	090	419867-9	REAR COVER	250
038	256197-5	PIN 7	70	091	266326-2	TAPPING SCREW 4X18	30
039	419004-5	PISTON	150	093	911233-1	PAN HEAD SCREW M5X20	30
040	213962-5	O RING 22	170	094	419868-7	HANDLE	680
041	213379-2	O RING 21	30	095	419025-7	SWITCH LEVER	140
042	419875-0	CONECTING ROD	110	096	154626-1	SWITCH HOLDER COMPLETE	180
043	266326-2	TAPPING SCREW 4X18	30	097	651922-3	SWITCH TG71B	850
044	450428-6	CHANGE LEVER	130	098	682560-0	CORD GUARD 10	170
045	233436-0	COMPRESSION SPRING 3	30	099	691025-1	POWER SUPPLY CORD 0.75-2-5.0	1,070
046	419873-4	LOCK BUTTON	80	100	687140-7	STRAIN RELIEF	40
047	450427-8	LINK LEVER	100	101	266326-2	TAPPING SCREW 4X18	30
048	213278-8	O RING 17	40	104	419869-5	HANDLE COVER	510
049	911231-5	PAN HEAD SCREW M5X20	50	105	266326-2	TAPPING SCREW 4X18	30
050	168456-4	CRANK CAP COVER COMPLETE	680	106	941101-4	FLAT WASHER 5	20
051	424566-0	SEAL RING	80	A01	158131-0	GRIP 36 COMPLETE	770
052	419874-2	LINK PLATE GUIDE	130	A02	194683-7	GREASE VESSEL SET	520
053	345582-8	LINK PLATE	260	A03	265701-9	SCREW M6X14	100

SERVICE DRAWING

MODEL NO. HR4002

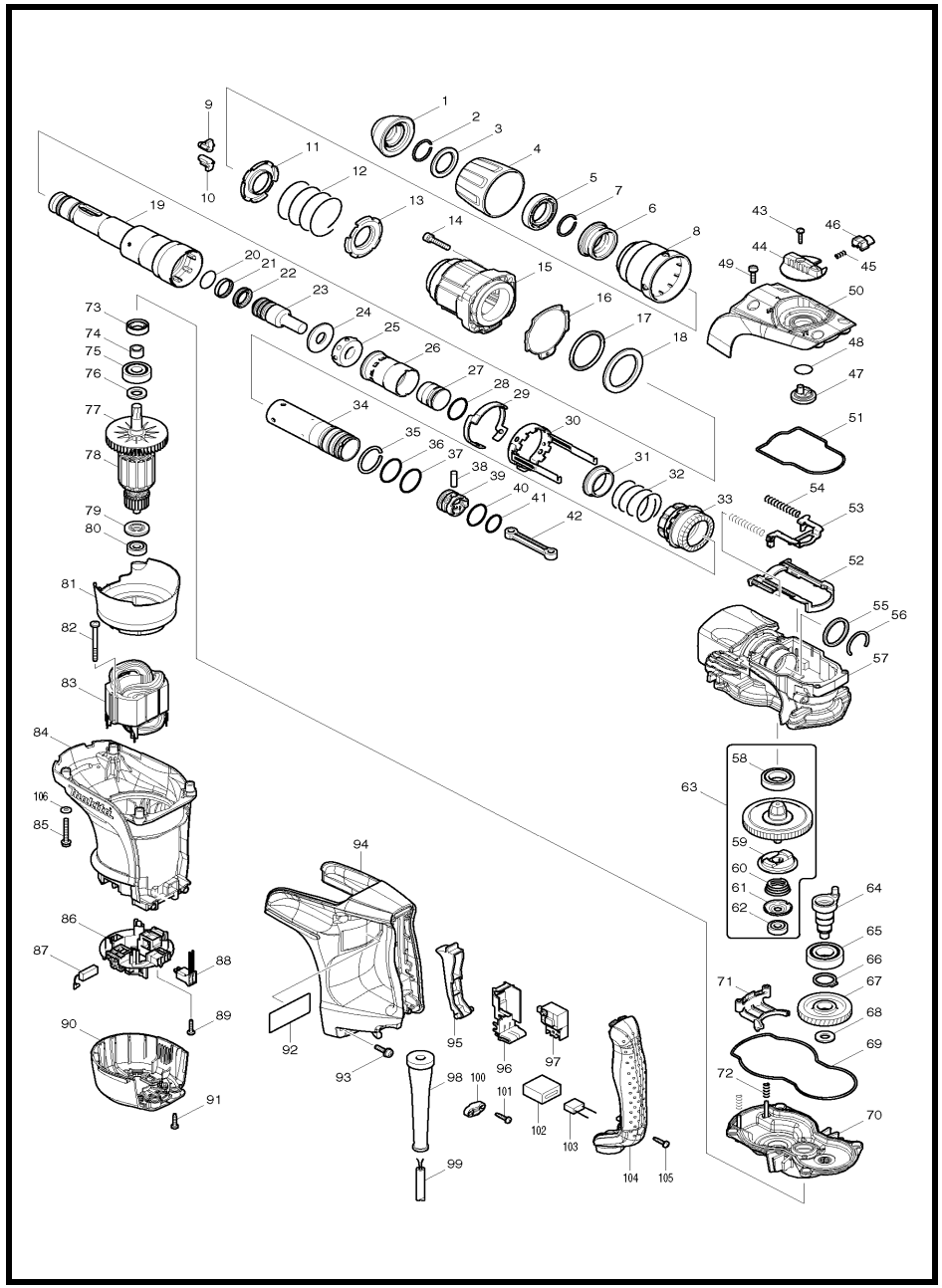

MODEL HR4002

ITEM	PARTS ID	DESCRIPTION	PRICE/BAHT
A04	266163-4	CUP SQUARE NECK BOLT M8X80	230
A05	321248-4	DEPTH GAUGE	200
A06	344491-8	GRIP SPRING 68	350
A07	344492-6	PLATE	120
A08	416299-1	SIDE GRIP BASE 68	260
A09	931302-2	HEX. NUT M6	70

SERVICE DRAWING

MODEL NO. HR4011C

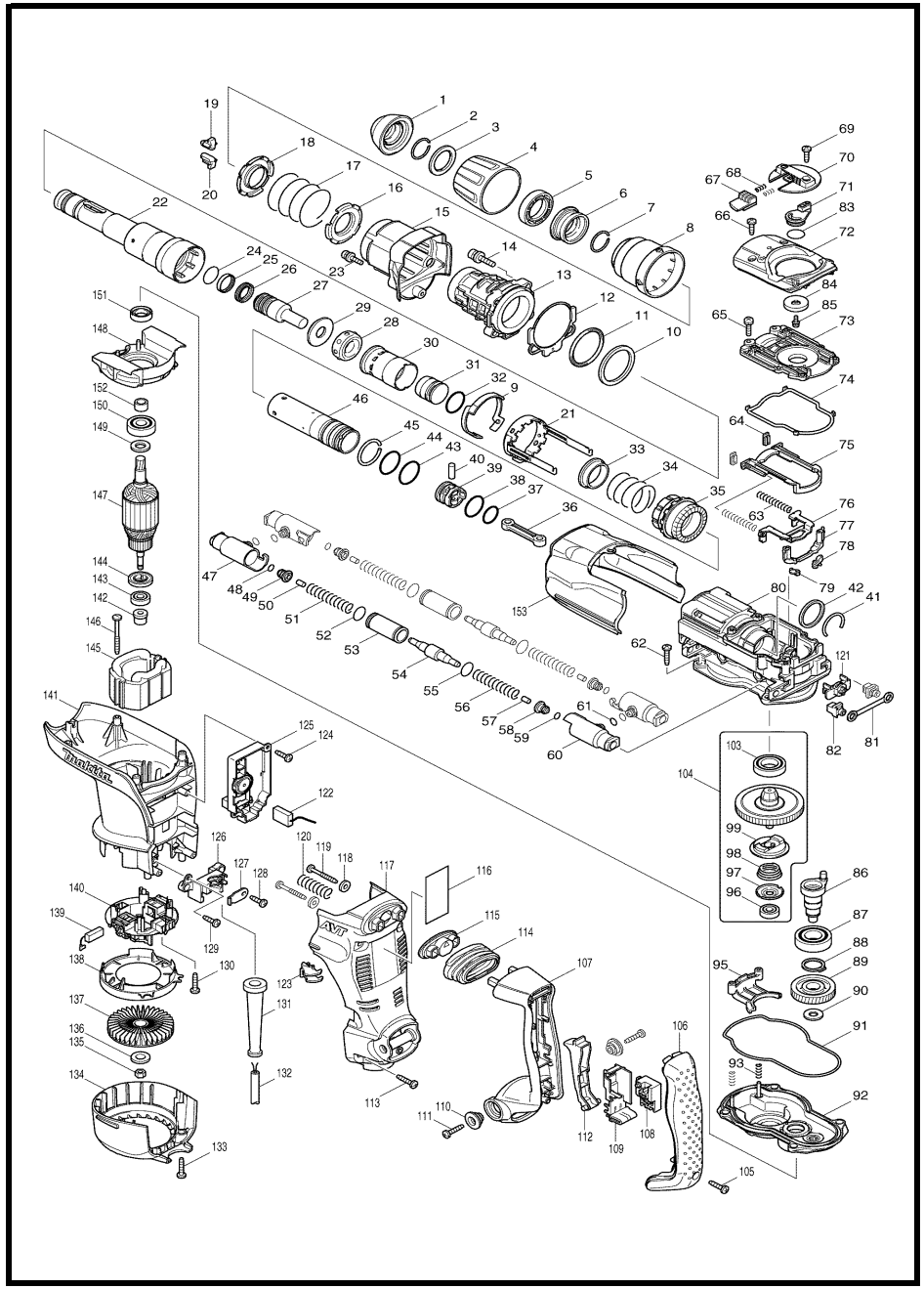

MODEL HR4011C

ITEM	PARTS ID	DESCRIPTION	PRICE/BAHT	ITEM	PARTS ID	DESCRIPTION	PRICE/BAHT
001	286285-4	TOOL HOLDER CAP	190	054	324574-0	COUNTER WEIGHT	300
002	231984-3	RING SPRING 25	110	055	213275-4	O RING 18	40
003	267272-2	FLAT WASHER 28	160	056	233435-2	COMPRESSION SPRING 11	100
004	419015-0	CHUCK COVER	190	057	263005-3	RUBBER PIN 6	30
005	419002-9	SPACER	150	058	419011-8	SPRING GUIDE	80
006	324548-1	CHUCK RING	380	059	213030-4	O RING 8	20
007	231984-3	RING SPRING 25	110	060	317923-8	PIPE HOLDER	1,140
008	419016-8	RELEASE COVER	200	061	213030-4	O RING 8	20
009	419760-7	LOCK SLEEVE GUIDE	150	062	266041-8	TAPPING SCREW 5X25	60
010	267336-2	FLAT WASHER 45	120	063	233432-8	COMPRESSION SPRING 7	60
011	262116-1	URETHAN RING 45	380	064	421910-2	SEAL PLATE	90
012	421911-0	SEAL SHEET	150	065	911133-5	PAN HEAD SCREW M4X18	50
013	154621-1	BARREL COMPLETE	2,710	066	266192-7	TAPPING SCREW 4X14	50
014	922353-6	HEX.SOCKET HEAD BOLT M6X30	90	067	419009-5	LOCK BUTTON	110
015	154624-5	BARREL COVER COMPLETE	520	068	233436-0	COMPRESSION SPRING 3	30
016	345579-7	SPRING GUIDE	150	069	266192-7	TAPPING SCREW 4X14	50
017	233431-0	COMPRESSION SPRING 48	80	070	419020-7	CHANGE LEVER	320
018	345579-7	SPRING GUIDE	150	071	419007-9	CRANK LEVER	150
019	310161-1	TOOL RETAINER	530	072	317924-6	CRANK CAP COVER	720
020	310161-1	TOOL RETAINER	530	073	419030-4	CRANK CAP	230
021	165633-9	LOCK SLEEVE	1,220	074	421908-9	SEAL RING	150
022	324542-3	TOOL HOLDER	8,060	075	419019-2	LINK PLATE GUIDE	160
023	266437-3	HEX. SOCKET HEAD BOLT M4X16	90	076	345582-8	LINK PLATE	260
024	213317-4	O RING 20	70	077	419012-6	AIR PIPE	130
025	213392-0	FLUORIDE RING 25	420	078	421909-7	AIR PIPE SEAL	80
026	213281-9	X-RING 18	230	079	421909-7	AIR PIPE SEAL	80
027	324569-3	IMPACT BOLT	320	080	154622-9	CRANKHOUSING COMPLETE	5,120
028	421901-3	RUBBER RING 17	380	081	423345-3	CUSHION PLATE	80
029	324573-2	RING 17	200	082	419008-7	FIX GUIDE	70
030	419003-7	SLIDE SLEEVE	190	083	213262-3	O RING 18	40
031	324571-6	STRIKER	220	084	419006-1	LINK LEVER	180
032	213962-5	O RING 22	170	085	911511-9	PAN HEAD SCREW M4X10	60
033	331709-6	RING 33	360	086	324550-4	CRANK SHAFT	680
034	233448-3	COMPRESSION SPRING 37	60	087	211332-2	BALL BEARING 6004LLU	410
035	227509-9	STRAIGHT BEVEL GEAR 25	1,780	088	961060-6	RETAINING RING S-20	50
036	419005-3	CONNECTING ROD	110	089	226605-0	HELICAL GEAR 38	880
037	213379-2	O RING 21	30	090	253180-3	FLAT WASHER 10	80
038	213962-5	O RING 22	170	091	421907-1	SEAL RING	150
039	419004-5	PISTON	150	092	154623-7	GEAR HOUSING COMPLETE	3,600
040	256197-5	PIN 7	70	093	233433-6	COMPRESSION SPRING 5	30
041	233937-8	RING SPRING 31	30	095	419018-4	CHANGE PLATE	140
042	257268-1	RING 33	80	096	210005-4	BALL BEARING 608DDW	240
043	213406-5	O RING 30	30	097	345581-0	CUP WASHER 8	80
044	213406-5	O RING 30	30	098	233936-0	CONICAL COMPRESSIONSPRING19-27	40
045	233935-2	RING SPRING 32	40	099	324549-9	DRIVING FLANGE	470
046	324570-8	CYLINDER 28.5	3,880	103	211323-3	BALL BEARING 6904LLU	690
047	317923-8	PIPE HOLDER	1,140	104	135508-6	TORQUE LIMITER ASS'Y	6,450
048	213030-4	O RING 8	20	105	265995-6	TAPPING SCREW 4X18	40
049	419011-8	SPRING GUIDE	80	106	419036-2	HANDLE COVER	940
050	263005-3	RUBBER PIN 6	30	107	419038-8	HANDLE	570
051	233435-2	COMPRESSION SPRING 11	100	108	650676-9	SWITCH C3PA-1111	680
052	213275-4	O RING 18	40	109	154626-1	SWITCH HOLDER COMPLETE	180
053	324572-4	PIPE 16	390	110	313124-6	SHOULDER SLEEVE 6	200

SERVICE DRAWING

MODEL NO. HR4011C

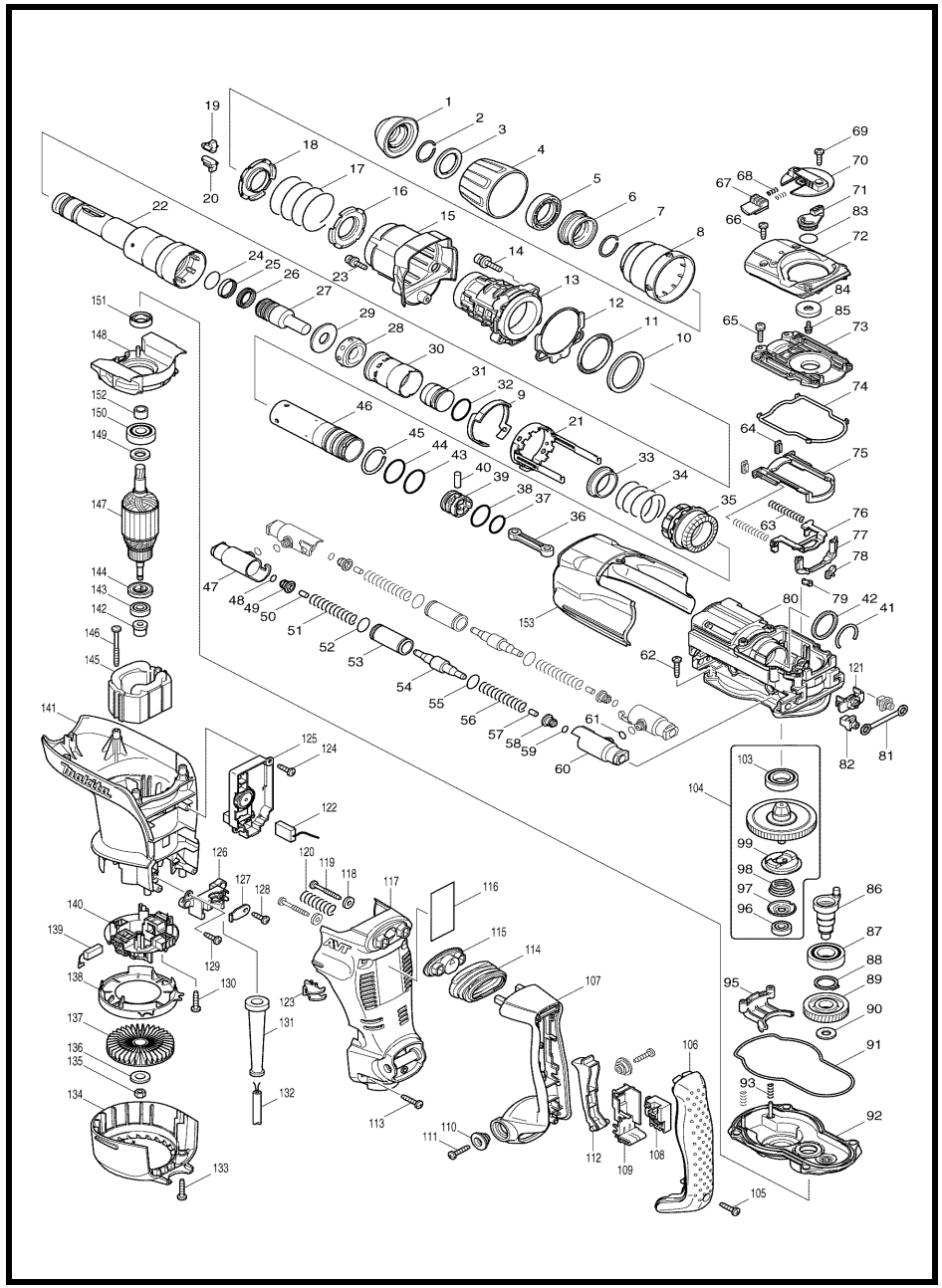

MODEL HR4011C

ITEM	PARTS ID	DESCRIPTION	PRICE/BAHT
111	266041-8	TAPPING SCREW 5X25	60
112	419025-7	SWITCH LEVER	140
113	266041-8	TAPPING SCREW 5X25	60
114	421912-8	DUST COVER	290
115	419014-2	DUST COVER SUPPORT	190
117	419037-0	HANDLE BASE	1,040
118	267066-5	FLAT WASHER 5	90
119	266211-9	TAPPING SCREW 5X40	60
120	233434-4	COMPRESSION SPRING 11	150
121	419013-4	SPRING GUIDE	190
122	638406-8	LEAD UNIT	190
123	419010-0	LENS	130
124	266192-7	TAPPING SCREW 4X14	50
125	631657-2	CONTROLLER	3,090
126	419024-9	CORD CLAMP BASE	130
127	687169-3	STRAIN RELIEF	60
128	266192-7	TAPPING SCREW 4X14	50
129	266192-7	TAPPING SCREW 4X14	50
130	265995-6	TAPPING SCREW 4X18	40
131	682560-0	CORD GUARD 10	170
132	691025-1	POWER SUPPLY CORD 0.75-2-5.0	1,070
133	265995-6	TAPPING SCREW 4X18	40
134	419032-0	REAR COVER	420
135	931303-0	HEX. NUT M6	20
136	253047-5	FLAT WASHER 6	40
138	419022-3	FAN GUIDE	150
139	195004-6	CARBON BRUSH SET CB-350	
140	638715-5	BRUSH HOLDER UNIT	540
141	154619-8	MOTOR HOUSING COMPLETE	1,530
142	324390-0	SHOULDER SLEEVE 6	200
143	210005-4	BALL BEARING 608DDW	240
144	681650-6	INSULATION WASHER	390
145	625758-6	FIELD 220-240V	
146	266095-5	TAPPING SCREW 5X55	120
147	513633-7	ARMATURE ASS'Y 220-240V	
148	419021-5	BAFFLE PLATE	180
149	253084-9	FLAT WASHER 12	40
150	211137-0	BALL BEARING 6201LLU	380
151	213231-4	OIL SEAL 15	390
152	331596-3	SLEEVE 12	90
153	419033-8	CRANK HOUSING COVER	530
154	421939-8	SPONGE SHEET	60
A02	135209-6	GRIP 36 ASS'Y	1,600
A04	181573-3	GREASE VESSEL 93G	240
A05	443122-7	CLOTH	220

SERVICE DRAWING

MODEL NO. HR4030C

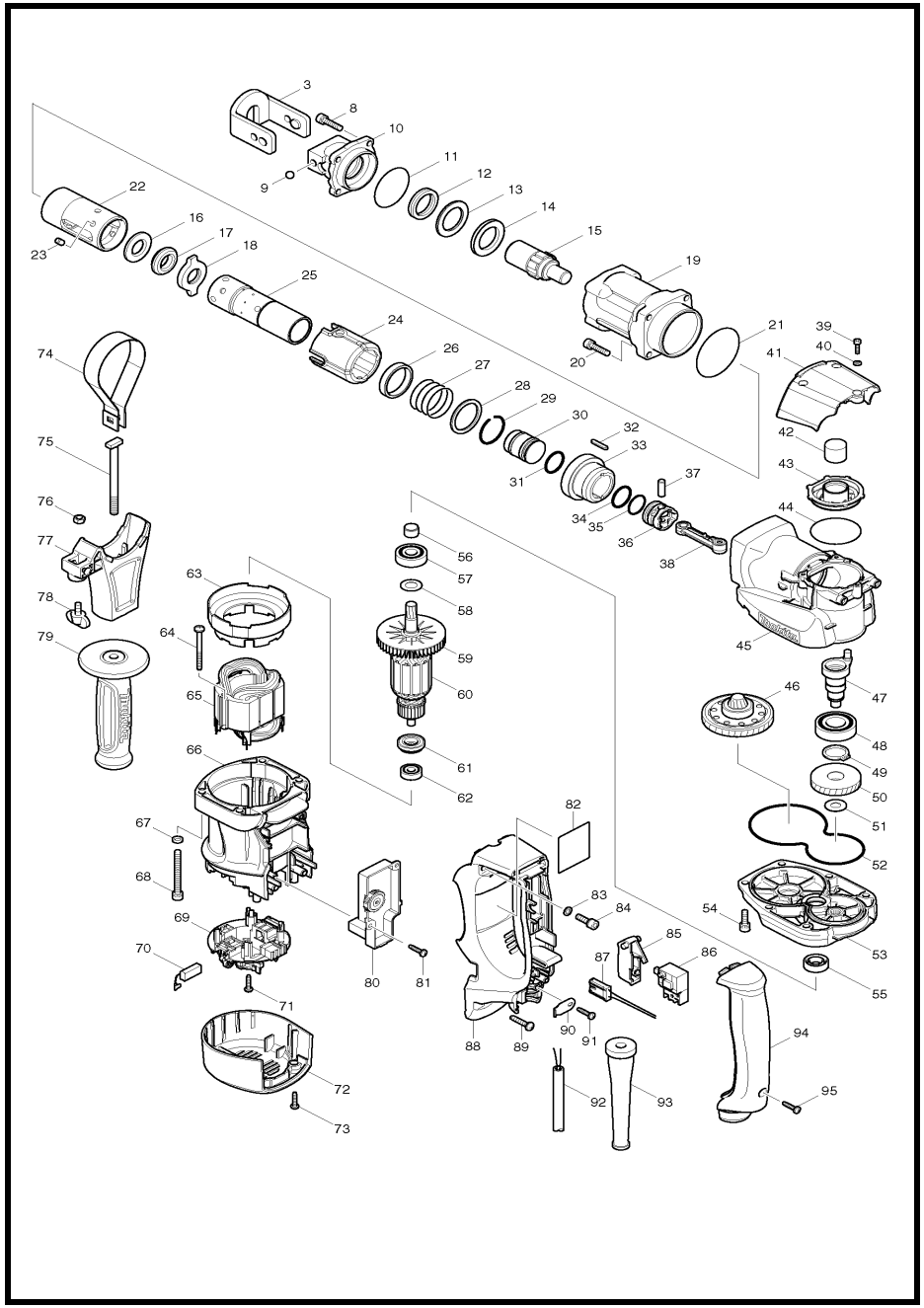

MODEL HR4030C

ITEM	PARTS ID	DESCRIPTION	PRICE/BAHT
003	165227-0	TOOL RETAINER	1,750
008	265914-2	HEX. SOCKET HEAD BOLT M6X25	90
009	216004-4	STEEL BALL 7.9	50
010	324728-9	TOOL HOLDER	4,190
011	213606-7	O RING 48	80
012	213428-5	X RING 28	740
013	261133-8	NYLON WASHER 29	120
014	267338-8	FLAT WASHER 29	300
015	324723-9	IMPACT BOLT	1,540
016	324726-3	WASHER 17	210
017	262119-5	RUBBER RING 18	200
018	324724-7	SLIDE PLATE	360
019	158117-4	BARREL COMPLETE	2,280
020	266158-7	HEX. SOCKET HEAD BOLT M6X30	90
021	213654-6	O RING 60	80
022	331730-5	CYLINDER A	2,770
023	256266-2	PIN 6	50
024	419670-8	SLIDE SLEEVE	200
025	331731-3	CYLINDER B	3,130
026	331732-1	RING 34	300
027	234016-5	COMPRESSION SPRING 35	110
028	267339-6	FLAT WASHER 34	240
029	233945-9	RING SPRING 32	50
030	324725-5	STRIKER	330
031	213962-5	O RING 22	170
032	254231-5	KEY 4	100
033	227508-1	SPIRAL BEVEL GEAR 27	1,220
034	213962-5	O RING 22	170
035	213379-2	O RING 21	30
036	419004-5	PISTON	150
037	256197-5	PIN 7	70
038	419679-0	CONECTING ROD	440
039	266148-0	HEX. SOCKET HEAD BOLT M4X14	80
040	941052-1	FLAT WASHER 4	20
041	419672-4	CRANK CAP COVER	400
042	443127-7	FILTER	80
043	419671-6	CRANK CAP	180
044	213604-1	O RING 50	90
045	158118-2	CRANK HOUSING COMPLETE	3,460
046	125375-7	TORQUE LIMITTER ASS'Y	5,350
047	324550-4	CRANK SHAFT	680
048	211332-2	BALL BEARING 6004LLU	410
049	961060-6	RETAINING RING S-20	50
050	226642-4	HELICAL GEAR 38	570
051	253180-3	FLAT WASHER 10	80
052	421976-2	SEAL RING	130
053	158119-0	GEAR HOUSING COMPLETE	1,940
054	922331-6	HEX. SOCKET HEAD BOLT M6X20	90
055	213231-4	OIL SEAL 15	390
056	331596-3	SLEEVE 12	90
057	211137-0	BALL BEARING 6201LLU	380
058	253084-9	FLAT WASHER 12	40
060	513693-9	ARMATURE ASS'Y 220-240V	

ITEM	PARTS ID	DESCRIPTION	PRICE/BAHT
061	681650-6	INSULATION WASHER	390
062	210005-4	BALL BEARING 608DDW	240
063	419673-2	BAFFLE PLATE	160
064	266095-5	TAPPING SCREW 5X55	120
065	625758-6	FIELD 220-240V	
066	419674-0	MOTOR HOUSING	1,030
067	941151-9	FLAT WASHER 6	30
068	922381-1	HEX. SOCKET HEAD BOLT M6X60	150
069	638501-4	BRUSH HOLDER UNIT	610
070	195004-6	CARBON BRUSH SET CB-350	
071	265995-6	TAPPING SCREW 4X18	40
072	419675-8	REAR COVER	350
073	265995-6	TAPPING SCREW 4X18	40
074	345763-4	GRIP SPRING 66	510
075	266322-0	SQUARE BOLT M8X80	170
076	931302-2	HEX. NUT M6	70
077	450332-9	SIDE GRIP BASE 66	540
078	265701-9	SCREW M6X14	100
079	158131-0	GRIP 36 COMPLETE	770
080	631742-1	CONTOROLLER	2,750
081	265995-6	TAPPING SCREW 4X18	40
083	941152-7	FLAT WASHER 6	50
084	265905-3	HEX. SOCKET HEAD BOLT M6X20	110
085	418549-0	SWITCH LEVER	190
086	651922-3	SWITCH TG71B	850
087	638509-8	LEAD UNIT	160
088	158263-3	HANDLE COMPLETE	1,000
089	266041-8	TAPPING SCREW 5X25	60
090	687169-3	STRAIN RELIEF	60
091	265995-6	TAPPING SCREW 4X18	40
092	691025-1	POWER SUPPLY CORD 0.75-2-5.0	1,070
093	682560-0	CORD GUARD 10	170
094	419677-4	HANDLE COVER	890
095	265995-6	TAPPING SCREW 4X18	40
A02	321248-4	DEPTH GAUGE	200

SERVICE DRAWING

MODEL NO. HR5001C

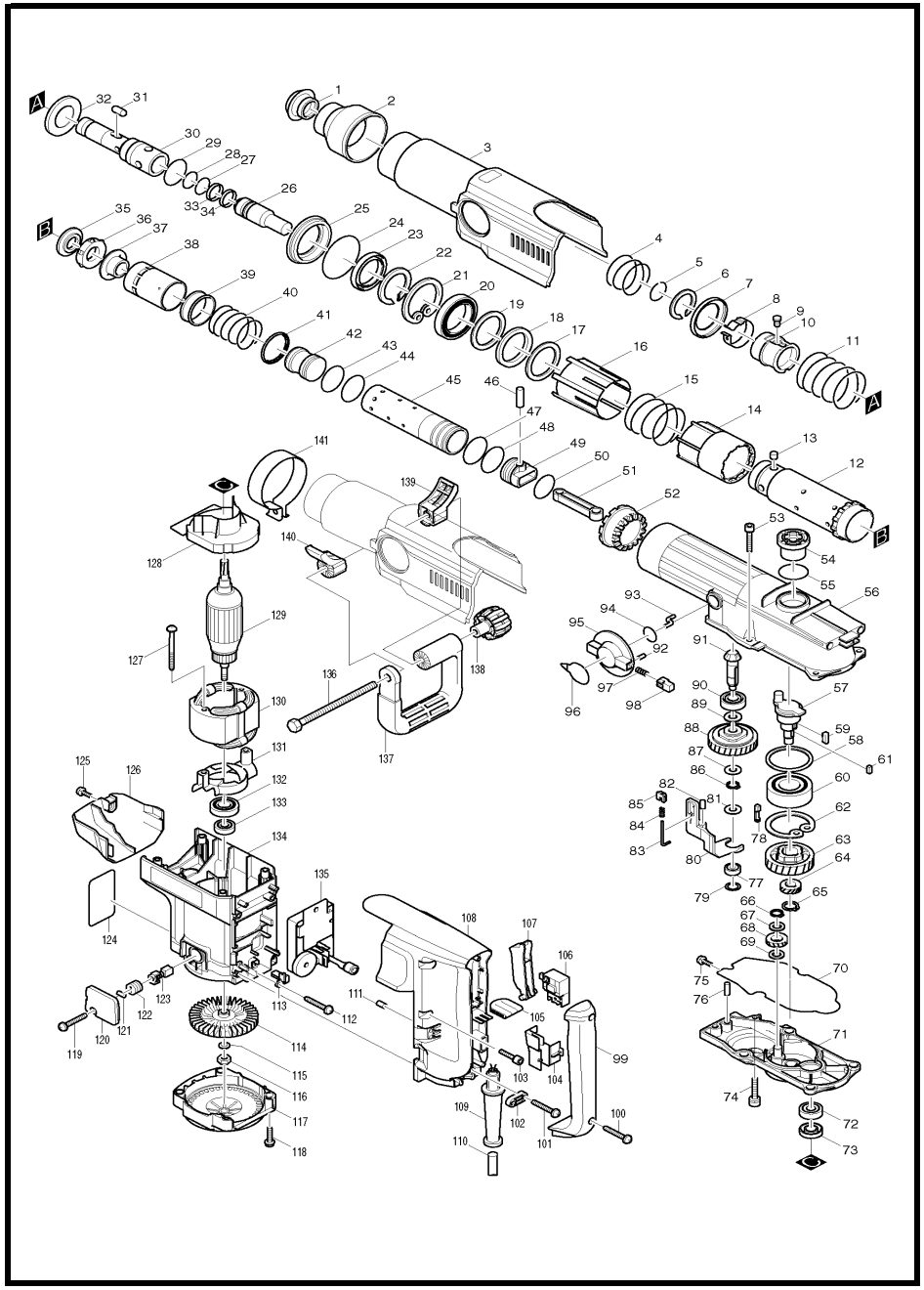

MODEL HR5001C

ITEM	PARTS ID	DESCRIPTION	PRICE/BAHT	ITEM	PARTS ID	DESCRIPTION	PRICE/BAHT
001	286250-3	TOOL HOLDER CAP	230	054	416561-4	CRANK CAP	360
002	416568-0	CHUCK COVER	430	055	213510-0	O RING 36	70
003	150836-8	CRANK HOUSING COVER COMPLETE	1,640	056	150831-8	CRANK HOUSING COMPLETE	7,950
004	233217-2	COMPRESSION SPRING 51	130	057	323774-9	CRANK SHAFT	2,360
005	231984-3	RING SPRING 25	110	058	267181-5	FLAT WASHER 56	230
006	961232-3	RETAINING RING WR-45	160	059	254229-2	KEY 5	100
007	267735-8	CUP WASHER 45	270	060	211470-0	BALL BEARING 62/32 2RS	950
008	232180-6	LEAF SPRING 41	250	061	254202-2	KEY 4	90
009	323767-6	PIN 8	230	062	962303-9	RETAINING RING R-65	180
010	323773-1	CHUCK RING	3,070	063	226493-5	HELICAL GEAR 50	1,580
011	233218-0	COMPRESSION SPRING 55	160	064	226490-1	HELICAL GEAR 20A	700
012	323772-3	TOOL HOLDER B	10,540	065	961054-1	RETAINING RING S-14	30
013	256265-4	PIN 10	180	066	961052-5	RETAINING RING S-12	40
014	416572-9	LOCK SLEEVE A	380	067	253744-3	FLAT WASHER 12	50
015	233216-4	COMPRESSION SPRING 58	160	068	150835-0	HELICAL GEAR	680
016	416573-7	LOCK SLEEVE B	310	069	253744-3	FLAT WASHER 12	50
017	267180-7	FLAT WASHER 50	290	070	421622-7	SEAL RING	180
018	262543-2	URETHANE SLEEVE 50	480	071	150832-6	GEAR HOUSING COMPLETE	3,560
019	267180-7	FLAT WASHER 50	290	072	211129-9	BALL BEARING 6201DDW	300
020	211751-2	BALL BEARING 6910	2,000	073	213160-1	OIL SEAL 14	590
021	962351-8	RETAINING RING R-72	200	074	922351-0	HEX. SOCKET HEAD BOLT M6X30	80
022	961234-9	RETAINING RING WR-50	160	075	911223-4	PAN HEAD SCREW M5X16	40
023	213618-0	OIL SEAL 48	310	076	256286-6	PIN 7	110
024	213715-2	O RING 67	110	077	210024-0	BALL BEARING 608LLU	240
025	416565-6	SEAL CASE	290	078	322951-0	CHANGE KEY	330
026	323768-4	IMPACT BOLT	970	079	253314-8	THIN WASHER 15	80
027	213394-6	O RING 23	90	080	416571-1	CHANGE LINK	290
028	213394-6	O RING 23	90	081	253810-6	FLAT WASHER 12	90
029	213522-3	O RING 36	190	082	256263-8	PIN 5	110
030	323771-5	TOOL HOLDER A	3,950	083	322963-3	GUIDE PIN 2	40
031	322908-1	ROLLER 8	160	084	233180-9	COMPRESSION SPRING 3	60
032	267734-0	CUP WASHER 37	160	085	416289-4	SLIDE PLATE	90
033	213431-6	FLUORIDE RING 28	780	086	961052-5	RETAINING RING S-12	40
034	213431-6	FLUORIDE RING 28	780	087	267113-2	FLAT WASHER 12	30
035	323817-7	RING 22	480	088	150986-9	TORQUE LIMITER COMPLETE	6,150
036	421623-5	RUBBER RING 24	520	089	267113-2	FLAT WASHER 12	30
037	331530-3	COLLAR SLEEVE 22	290	090	211109-5	BALL BEARING 6201	270
038	416566-4	SLIDE SLEEVE	310	091	226760-8	SPIRAL BEVEL GEAR 12	1,460
039	331531-1	RING 45	680	092	256122-6	PIN 4	90
040	233215-6	COMPRESSION SPRING 45	190	093	323973-3	CRANK PIN 4	180
041	267736-6	WASHER 45	180	094	213304-3	O RING 20	40
042	323769-2	STRIKER	900	095	416287-8	CHANGE LEVER	340
043	213482-9	O RING 34	110	096	816329-2	INDICATION LABEL	120
044	231985-1	RING SPRING 43	50	097	233188-3	COMPRESSION SPRING 2.4	60
045	331534-5	CYLINDER 40	4,570	098	417340-3	LOCK BUTTON	150
046	256295-5	PIN 10	150	099	417167-1	HANDLE COVER	1,340
047	213510-0	O RING 36	70	100	265995-6	TAPPING SCREW 4X18	40
048	213482-9	O RING 34	110	101	265995-6	TAPPING SCREW 4X18	40
049	416563-0	PISTON	560	102	687053-2	STRAIN RELIEF	70
050	213460-9	O RING 35	50	103	922353-6	HEX.SOCKET HEAD BOLT M6X30	90
051	416564-8	ROD	350	104	416126-2	LEAD GUIDE	140
052	226761-6	SPIRAL BEVEL GEAR 41	3,020	105	421583-1	SPONGE SHEET	40
053	922361-7	HEX. SOCKET HEAD BOLT M6X40	110	106	651922-3	SWITCH TG71B	850

SERVICE DRAWING

MODEL NO. HR5001C

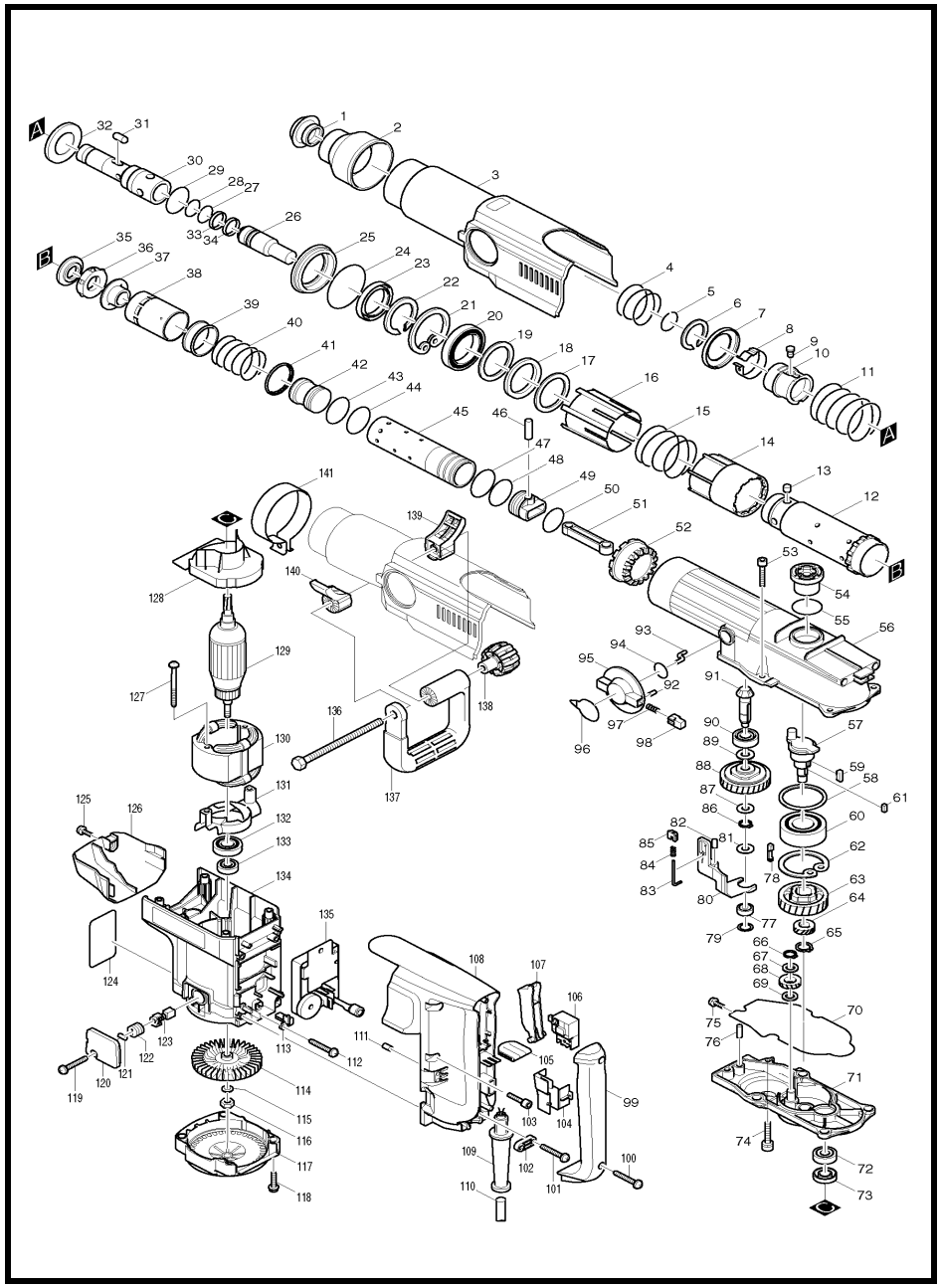

MODEL HR5001C

ITEM	PARTS ID	DESCRIPTION	PRICE/BAHT
107	416284-4	SWITCH LEVER	130
108	417166-3	HANDLE	1,850
109	682560-0	CORD GUARD 10	170
110	691025-1	POWER SUPPLY CORD 0.75-2-5.0	1,070
111	416285-2	ACRYLIC PIN 5	60
112	265995-6	TAPPING SCREW 4X18	40
113	416562-2	FIX ROD	160
115	253165-9	FLAT WASHER 8	60
116	931402-8	HEX. NUT M8	70
117	416570-3	REAR COVER	720
118	266021-4	TAPPING SCREW 5X20	60
119	265995-6	TAPPING SCREW 4X18	40
120	416292-5	BRUSH HOLDER COVER	130
121	263002-9	RUBBER PIN 4	30
122	643650-4	BRUSH HOLDER CAP 6.5-13.5	70
124	859584-3	NAME PLATE HR5001C	160
125	911223-4	PAN HEAD SCREW M5X16	40
126	416575-3	GEAR HOUSING COVER	590
127	266095-5	TAPPING SCREW 5X55	120
128	416569-8	BAFFLE PLATE	310
130	626078-1	FIELD 220-240V	
131	416567-2	DUST GUIDE	250
132	681642-5	INSULATION WASHER	570
133	211088-7	BALL BEARING 6000DDW	300
134	150833-4	MOTOR HOUSING COMPLETE	3,510
135	631273-0	CONTROLLER	4,010
136	265439-6	HEX. BOLT M8X150	190
137	417003-1	SIDE HANDLE	810
138	252640-2	WING NUT M8	380
139	416574-5	SIDE HANDLE BASE 87	270
140	416574-5	SIDE HANDLE BASE 87	270
141	151549-4	SIDE HANDLE 87 COMPLETE	1,240
143	417002-3	SIDE HANDLE CAM	150
A01	152554-4	GRIP 36 COMPLETE	660
A02	265701-9	SCREW M6X14	100
A03	266163-4	CUP SQUARE NECK BOLT M8X80	230
A04	344492-6	PLATE	120
A05	344635-0	GRIP SPRING 87	1,020
A06	416580-0	SIDE GRIP BASE 87	810
A07	931302-2	HEX. NUT M6	70
A09	194683-7	GREASE VESSEL SET	520
B02	134945-1	SIDE HANDLE 87 ASS'Y	2,220

SERVICE DRAWING

MODEL NO. HR5201C

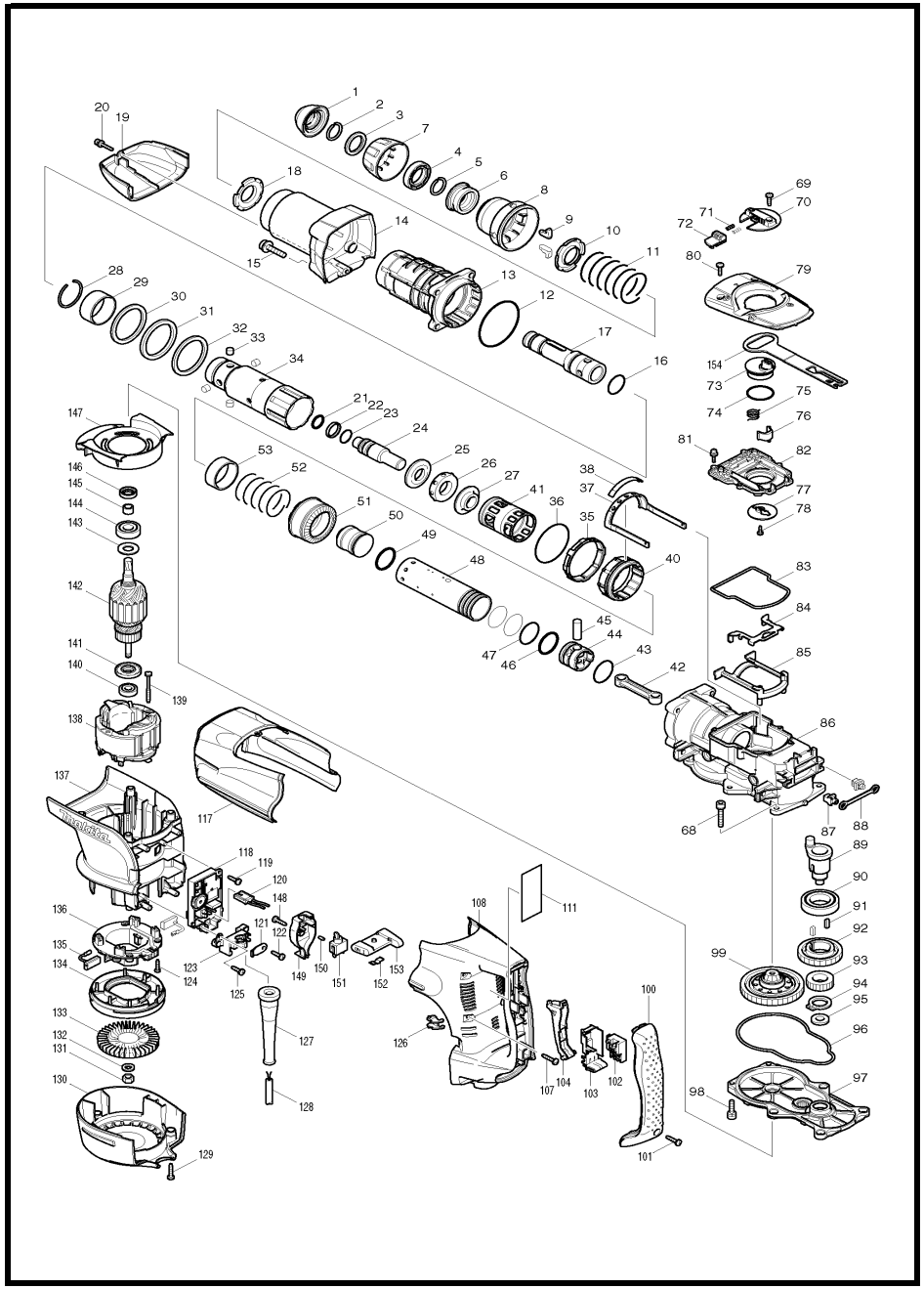

MODEL HR5201C

ITEM	PARTS ID	DESCRIPTION	PRICE/BAHT	ITEM	PARTS ID	DESCRIPTION	PRICE/BAHT
001	286285-4	TOOL HOLDER CAP	190	069	266192-7	TAPPING SCREW 4X14	50
002	233948-3	RING SPRING 25	110	070	419020-7	CHANGE LEVER	320
003	257280-1	RING 28	290	071	233436-0	COMPRESSION SPRING 3	30
004	419002-9	SPACER	150	072	419777-0	LOCK BUTTON	130
005	233948-3	RING SPRING 25	110	073	450687-2	CRANK LEVER	230
006	324752-2	CHUCK RING	910	074	213534-6	O RING 36	70
007	419778-8	CHUCK COVER	180	075	233506-5	TORSION SPRING 16	110
008	419779-6	RELEASE COVER	290	076	310207-3	LINK LEVER	440
009	310178-4	TOOL RETAINER	440	077	345778-1	RETAINER PLATE	270
010	345804-6	SPRING GUIDE	190	078	265014-8	+ PAN HEAD SCREW M4X12	130
011	233496-2	COMPRESSION SPRING 49	160	079	318130-6	CRANK CAP COVER	940
012	213766-5	O-RING 78	150	080	266192-7	TAPPING SCREW 4X14	50
013	158175-0	BARREL COMPLETE	3,250	081	911133-5	PAN HEAD SCREW M4X18	50
014	158179-2	BARREL COVER COMPLETE	730	082	419789-3	CRANK CAP	310
015	922456-6	HEX. SOCKET HEAD BOLT M8X35	110	083	421998-2	SEAL RING	190
016	213492-6	O-RING 32	190	084	345779-9	LINK PLATE	310
017	324740-9	TOOL HOLDER A	6,460	085	419781-9	LINK PLATE GUIDE	160
018	345804-6	SPRING GUIDE	190	086	158177-6	CRANK HOUSING COMPLETE	5,360
019	419791-6	GEAR HOUSING COVER	330	087	419008-7	FIX GUIDE	70
020	922148-7	HEX. SOCKET HEAD BOLT M4X25	60	088	423366-5	CUSHION PLATE	90
021	213274-6	O RING 18	90	089	324739-4	CRANK SHAFT	1,500
022	213392-0	FLUORIDE RING 25	420	090	211418-2	BALL BEARING 6006LLU	680
023	213317-4	O RING 20	70	091	254229-2	KEY 5	100
024	324753-0	IMPACT BOLT	570	092	226646-6	HELICAL GEAR 47	980
025	324756-4	RING 20	410	093	227176-0	SPUR GEAR 24	550
026	424000-0	RUBBUR RING 24	310	094	961102-6	RETAINING RING S-22	60
027	324757-2	COLLAR SLEEVE 20	500	095	253843-1	FLAT WASHER 12	120
028	233949-1	RING SPRING 44	50	096	421999-0	SEAL RING	180
029	257282-7	RING 47	1,580	097	158178-4	GEAR HOUSING COMPLETE	2,600
030	267287-9	FLAT WASHER 57	130	098	922341-3	HEX. SOCKET HEAD BOLT M6X25	90
031	262122-6	URETAHNE RING 57	590	099	125374-9	TORQUE LIMITER ASS'Y	6,910
032	267287-9	FLAT WASHER 57	130	100	419796-6	HANDLE COVER	880
033	256265-4	PIN 10	180	101	265995-6	TAPPING SCREW 4X18	40
034	324741-7	TOOL HOLDER B	9,670	102	650676-9	SWITCH C3PA-1111	680
035	419776-2	LOCK SLEEVE	160	103	154626-1	SWITCH HOLDER COMPLETE	180
036	213654-6	O RING 60	80	104	419028-1	SWITCH LEVER	180
037	165459-9	RINK ARM	1,090	107	266041-8	TAPPING SCREW 5X25	60
038	419775-4	LINK ARM GUIDE	130	108	419799-0	HANDLE	1,280
040	313138-5	DRIVING SLEEVE	1,140	111	863359-4	HR5201C NAME PLATE	90
041	419780-1	SLIDE SLEEVE	200	117	419794-0	CRANK HOUSING COVER	720
042	451516-2	CONECTING ROD	360	118	631727-7	CONTROLLER	2,960
043	213460-9	O RING 35	50	119	266192-7	TAPPING SCREW 4X14	50
044	419771-2	PISTON	200	120	638510-3	LEAD UNIT	180
045	268121-6	PIN 12	80	121	687169-3	STRAIN RELIEF	60
046	213296-6	O-RING 34	180	122	266192-7	TAPPING SCREW 4X14	50
047	213510-0	O RING 36	70	123	419024-9	CORD CLAMP BASE	130
048	331748-6	CYLINDER 40	5,610	124	265995-6	TAPPING SCREW 4X18	40
049	213296-6	O-RING 34	180	125	266192-7	TAPPING SCREW 4X14	50
050	324754-8	STRIKER	620	126	419774-6	LENS	130
051	227511-2	STRAIGHT BEVEL GEAR 33	2,790	127	682560-0	CORD GUARD 10	170
052	233498-8	COMPRESSION SPRING 46	230	128	691025-1	POWER SUPPLY CORD 0.75-2-5.0	1,070
053	257281-9	RING 45	410	129	266041-8	TAPPING SCREW 5X25	60
068	922361-7	HEX. SOCKET HEAD BOLT M6X40	110	130	419790-8	REAR COVER	830

SERVICE DRAWING

MODEL NO. HR5201C

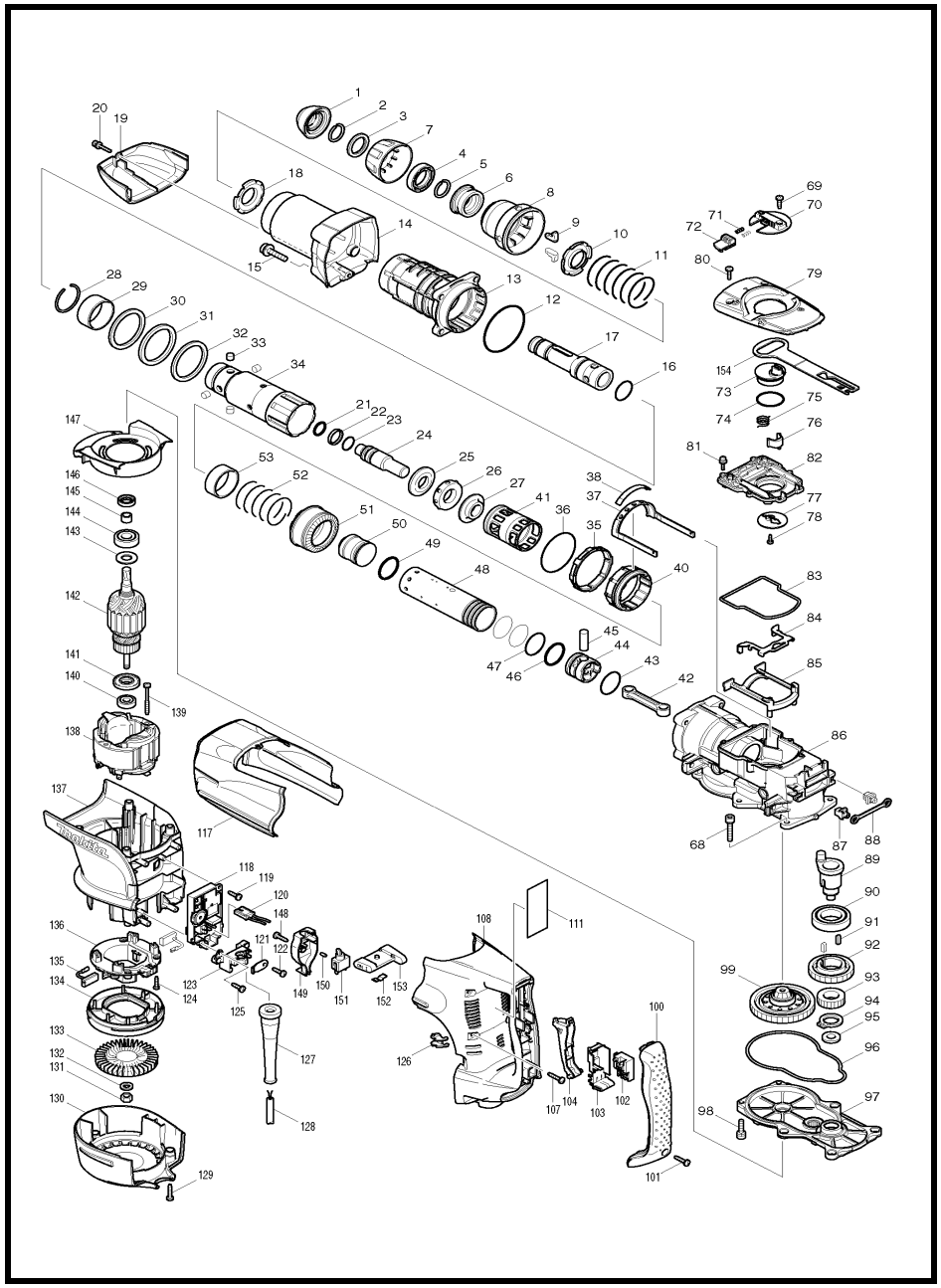

MODEL HR5201C

ITEM	PARTS ID	DESCRIPTION	PRICE/BAHT
131	252178-7	HEX. NUT M8-12	60
132	253165-9	FLAT WASHER 8	60
134	419782-7	FAN GUIDE	180
135	195845-0	CARBON BRUSH CB-175	
136	638447-4	BRUSH HOLDER UNIT	560
137	419795-8	MOTOR HOUSING	1,730
138	636303-2	FIELD 220-240V	
139	266095-5	TAPPING SCREW 5X55	120
140	210059-1	BALL BEARING 6000DDW	300
141	681642-5	INSULATION WASHER	570
142	516993-6	ARMATURE ASS'Y 220-240V	
143	267025-9	FLAT WASHER 15	70
144	211238-4	BALL BEARING 6202LLU	400
145	331596-3	SLEEVE 12	90
146	213231-4	OIL SEAL 15	390
147	419788-5	BAFFLE PLATE	180
148	266192-7	TAPPING SCREW 4X14	50
149	419786-9	SWITCH BOX	160
150	263027-3	RUBBER PIN 4	50
151	651418-4	SWITCH ST115A-40	350
152	232209-8	LEAF SPRING	90
153	154635-0	SLIDE LEVER COMPLETE	390
154	419785-1	CONTROL PLATE	180
A01	158131-0	GRIP 36 COMPLETE	770
A02	158274-8	PLASTIC CARRYING CASE COMPLETE	5,430
A03	194683-7	GREASE VESSEL SET	520
A04	135269-8	SIDE HANDLE 82 ASS'Y	2,960
A05	265701-9	SCREW M6X14	100
A06	266163-4	CUP SQUARE NECK BOLT M8X80	230
A07	321248-4	DEPTH GAUGE	200
A08	344492-6	PLATE	120
A09	345780-4	GRIP SPRING 82	590
A10	419792-4	SIDE GRIP BASE 82	280
A11	443122-7	CLOTH	220
A12	931302-2	HEX. NUT M6	70

SERVICE DRAWING

MODEL NO. HR5211C

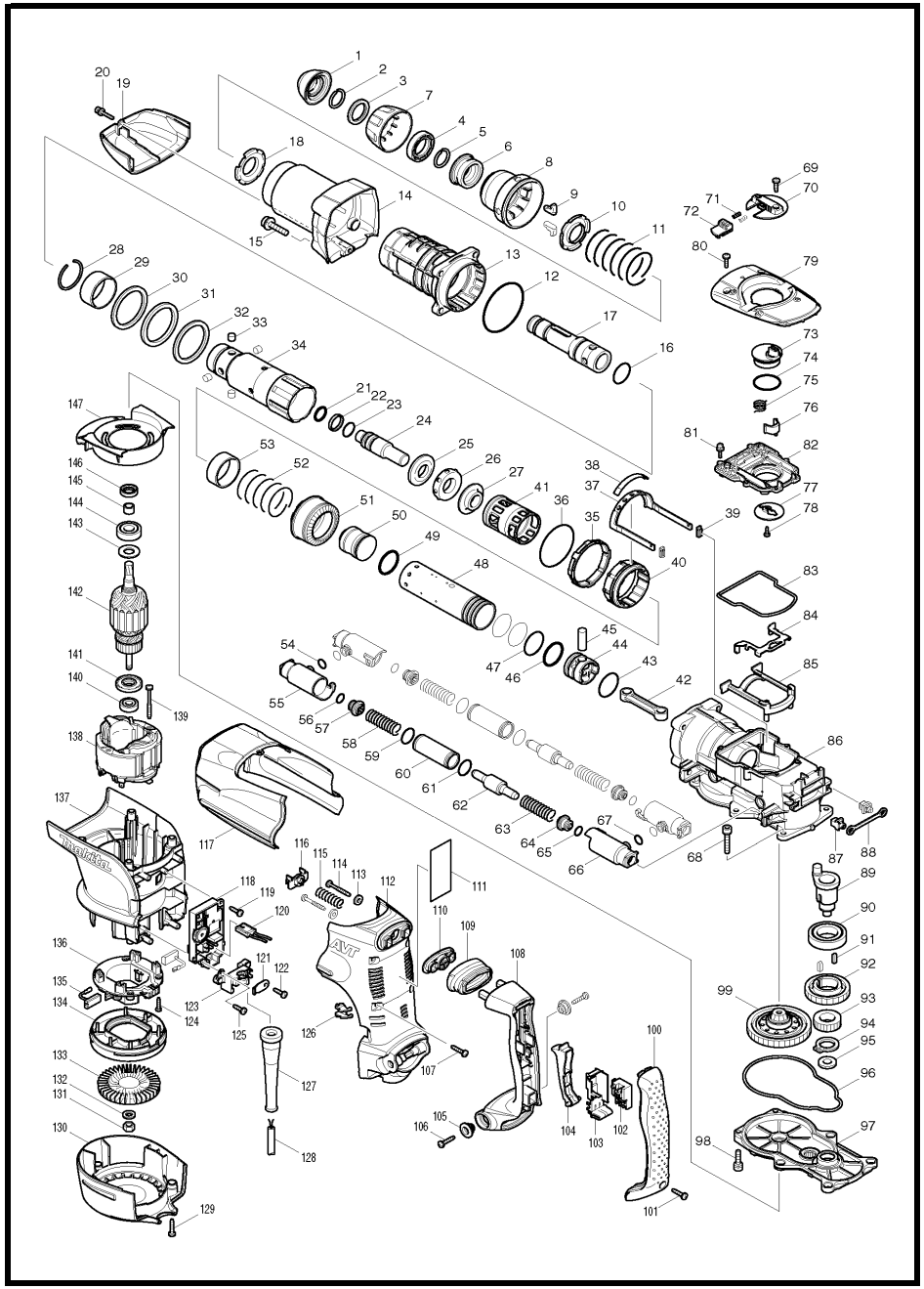

MODEL HR5211C

ITEM	PARTS ID	DESCRIPTION	PRICE/BAHT	ITEM	PARTS ID	DESCRIPTION	PRICE/BAHT
001	286285-4	TOOL HOLDER CAP	190	054	213118-0	O RING 12	20
002	233948-3	RING SPRING 25	110	055	318124-1	PIPE HOLDER	750
003	257280-1	RING 28	290	056	213118-0	O RING 12	20
004	419002-9	SPACER	150	057	419773-8	SPRING GUIDE	130
005	233948-3	RING SPRING 25	110	058	233497-0	COMPRESSION SPRING 15	150
006	324752-2	CHUCK RING	910	059	213953-6	O RING 24	40
007	419778-8	CHUCK COVER	180	060	331745-2	PIPE 22	310
008	419779-6	RELEASE COVER	290	061	213953-6	O RING 24	40
009	310178-4	TOOL RETAINER	440	062	324755-6	COUNTER WEIGHT	1,070
010	345804-6	SPRING GUIDE	190	063	233497-0	COMPRESSION SPRING 15	150
011	233496-2	COMPRESSION SPRING 49	160	064	419773-8	SPRING GUIDE	130
012	213766-5	O-RING 78	150	065	213118-0	O RING 12	20
013	158175-0	BARREL COMPLETE	3,250	066	318124-1	PIPE HOLDER	750
014	158179-2	BARREL COVER COMPLETE	730	067	213118-0	O RING 12	20
015	922456-6	HEX. SOCKET HEAD BOLT M8X35	110	068	922361-7	HEX. SOCKET HEAD BOLT M6X40	110
016	213492-6	O-RING 32	190	069	266192-7	TAPPING SCREW 4X14	50
017	324740-9	TOOL HOLDER A	6,460	070	419020-7	CHANGE LEVER	320
018	345804-6	SPRING GUIDE	190	071	233436-0	COMPRESSION SPRING 3	30
019	419791-6	GEAR HOUSING COVER	330	072	419777-0	LOCK BUTTON	130
020	922148-7	HEX. SOCKET HEAD BOLT M4X25	60	073	450687-2	CRANK LEVER	230
021	213274-6	O RING 18	90	074	213534-6	O RING 36	70
022	213392-0	FLUORIDE RING 25	420	075	233506-5	TORSION SPRING 16	110
023	213317-4	O RING 20	70	076	310207-3	LINK LEVER	440
024	324753-0	IMPACT BOLT	570	077	345778-1	RETAINER PLATE	270
025	324756-4	RING 20	410	078	265014-8	+ PAN HEAD SCREW M4X12	130
026	424000-0	RUBBUR RING 24	310	079	318129-1	CRANK CAP COVER	970
027	324757-2	COLLAR SLEEVE 20	500	080	266192-7	TAPPING SCREW 4X14	50
028	233949-1	RING SPRING 44	50	081	911133-5	PAN HEAD SCREW M4X18	50
029	257282-7	RING 47	1,580	082	419789-3	CRANK CAP	310
030	267287-9	FLAT WASHER 57	130	083	421998-2	SEAL RING	190
031	262122-6	URETAHNE RING 57	590	084	345779-9	LINK PLATE	310
032	267287-9	FLAT WASHER 57	130	085	419781-9	LINK PLATE GUIDE	160
033	256265-4	PIN 10	180	086	158176-8	CRANK HOUSING COMPLETE	5,080
034	324741-7	TOOL HOLDER B	9,670	087	419008-7	FIX GUIDE	70
035	419776-2	LOCK SLEEVE	160	088	423366-5	CUSHION PLATE	90
036	213654-6	O RING 60	80	089	324739-4	CRANK SHAFT	1,500
037	165459-9	RINK ARM	1,090	090	211418-2	BALL BEARING 6006LLU	680
038	419775-4	LINK ARM GUIDE	130	091	254229-2	KEY 5	100
039	424024-6	SEAL PLATE	90	092	226646-6	HELICAL GEAR 47	980
040	313138-5	DRIVING SLEEVE	1,140	093	227176-0	SPUR GEAR 24	550
041	419780-1	SLIDE SLEEVE	200	094	961102-6	RETAINING RING S-22	60
042	451516-2	CONECTING ROD	360	095	253843-1	FLAT WASHER 12	120
043	213460-9	O RING 35	50	096	421999-0	SEAL RING	180
044	419771-2	PISTON	200	097	158178-4	GEAR HOUSING COMPLETE	2,600
045	268121-6	PIN 12	80	098	922341-3	HEX. SOCKET HEAD BOLT M6X25	90
046	213296-6	O-RING 34	180	099	125374-9	TORQUE LIMITER ASS'Y	6,910
047	213510-0	O RING 36	70	100	419796-6	HANDLE COVER	880
048	331748-6	CYLINDER 40	5,610	101	265995-6	TAPPING SCREW 4X18	40
049	213296-6	O-RING 34	180	102	650676-9	SWITCH C3PA-1111	680
050	324754-8	STRIKER	620	103	154626-1	SWITCH HOLDER COMPLETE	180
051	227511-2	STRAIGHT BEVEL GEAR 33	2,790	104	419025-7	SWITCH LEVER	140
052	233498-8	COMPRESSION SPRING 46	230	105	313124-6	SHOULDER SLEEVE 6	200
053	257281-9	RING 45	410	106	266041-8	TAPPING SCREW 5X25	60

SERVICE DRAWING

MODEL NO. HR5211C

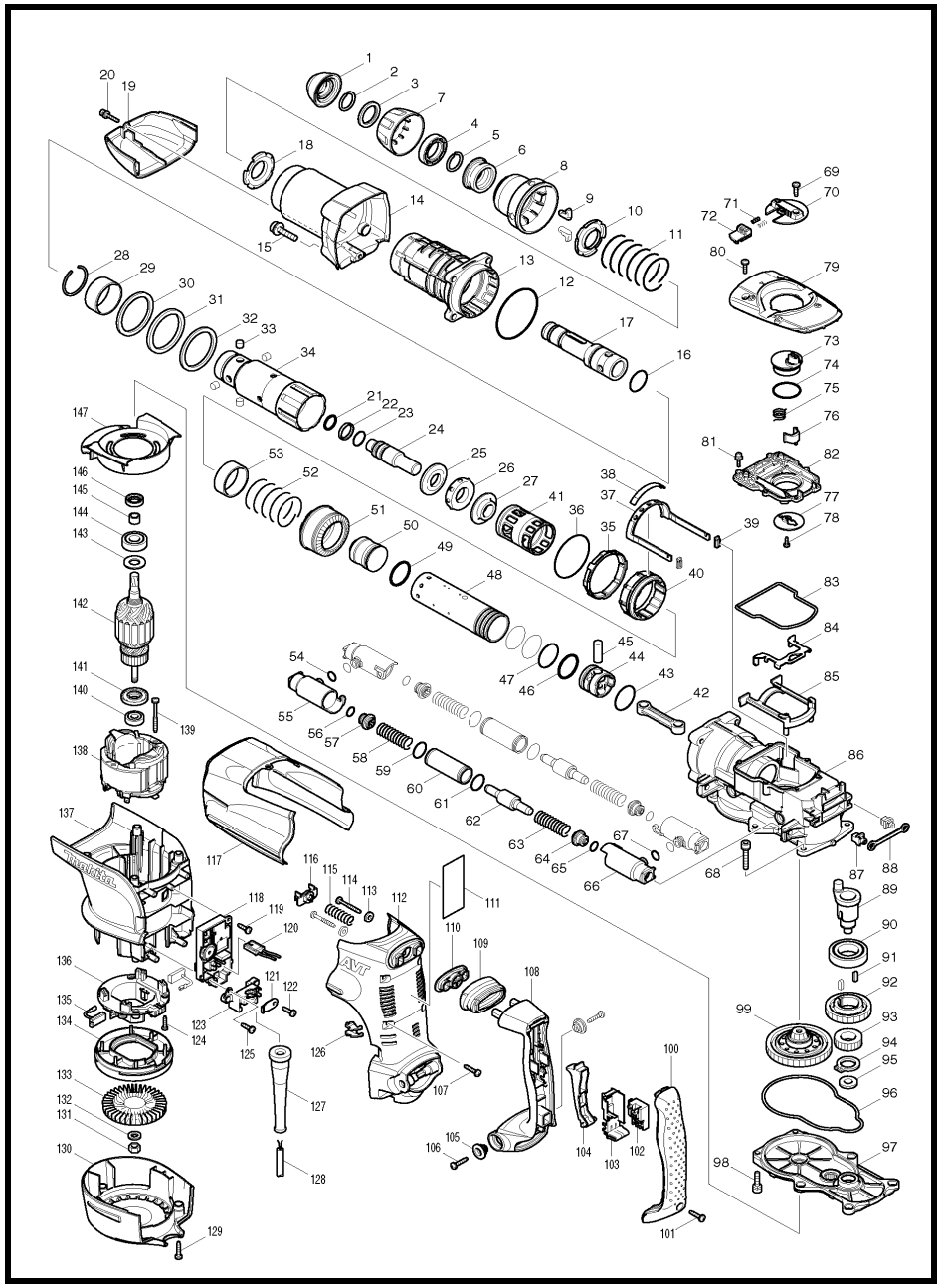

MODEL HR5211C

ITEM	PARTS ID	DESCRIPTION	PRICE/BAHT
107	266041-8	TAPPING SCREW 5X25	60
108	419798-2	HANDLE	760
109	424001-8	DUST COVER	250
110	419783-5	DUST COVER SUPPORT	190
112	419797-4	HANDLE BASE	1,500
113	253807-5	FLAT WASHER 5	40
114	266211-9	TAPPING SCREW 5X40	60
115	233434-4	COMPRESSION SPRING 11	150
116	419013-4	SPRING GUIDE	190
117	419793-2	CRANK HOUSING COVER	780
118	631727-7	CONTROLLER	2,960
119	266192-7	TAPPING SCREW 4X14	50
120	638510-3	LEAD UNIT	180
121	687169-3	STRAIN RELIEF	60
122	266192-7	TAPPING SCREW 4X14	50
123	419024-9	CORD CLAMP BASE	130
124	265995-6	TAPPING SCREW 4X18	40
125	266192-7	TAPPING SCREW 4X14	50
126	419774-6	LENS	130
127	682560-0	CORD GUARD 10	170
128	691025-1	POWER SUPPLY CORD 0.75-2-5.0	1,070
129	266041-8	TAPPING SCREW 5X25	60
130	419790-8	REAR COVER	830
131	252178-7	HEX. NUT M8-12	60
132	253165-9	FLAT WASHER 8	60
134	419782-7	FAN GUIDE	180
135	195845-0	CARBON BRUSH CB-175	
136	638447-4	BRUSH HOLDER UNIT	560
137	419795-8	MOTOR HOUSING	1,730
138	636303-2	FIELD 220-240V	
139	266095-5	TAPPING SCREW 5X55	120
140	210059-1	BALL BEARING 6000DDW	300
141	681642-5	INSULATION WASHER	570
142	516993-6	ARMATURE ASS'Y 220-240V	
143	267025-9	FLAT WASHER 15	70
144	211238-4	BALL BEARING 6202LLU	400
145	331596-3	SLEEVE 12	90
146	213231-4	OIL SEAL 15	390
147	419788-5	BAFFLE PLATE	180
A01	158131-0	GRIP 36 COMPLETE	770
A03	194683-7	GREASE VESSEL SET	520
A04	135269-8	SIDE HANDLE 82 ASS'Y	2,960
A05	265701-9	SCREW M6X14	100
A06	266163-4	CUP SQUARE NECK BOLT M8X80	230
A07	321248-4	DEPTH GAUGE	200
A08	344492-6	PLATE	120
A09	345780-4	GRIP SPRING 82	590
A10	419792-4	SIDE GRIP BASE 82	280
A11	443122-7	CLOTH	220
A12	931302-2	HEX. NUT M6	70
A15	135380-6	GRIP 36 ASSY	1,650

SERVICE DRAWING

MODEL NO. HS300D

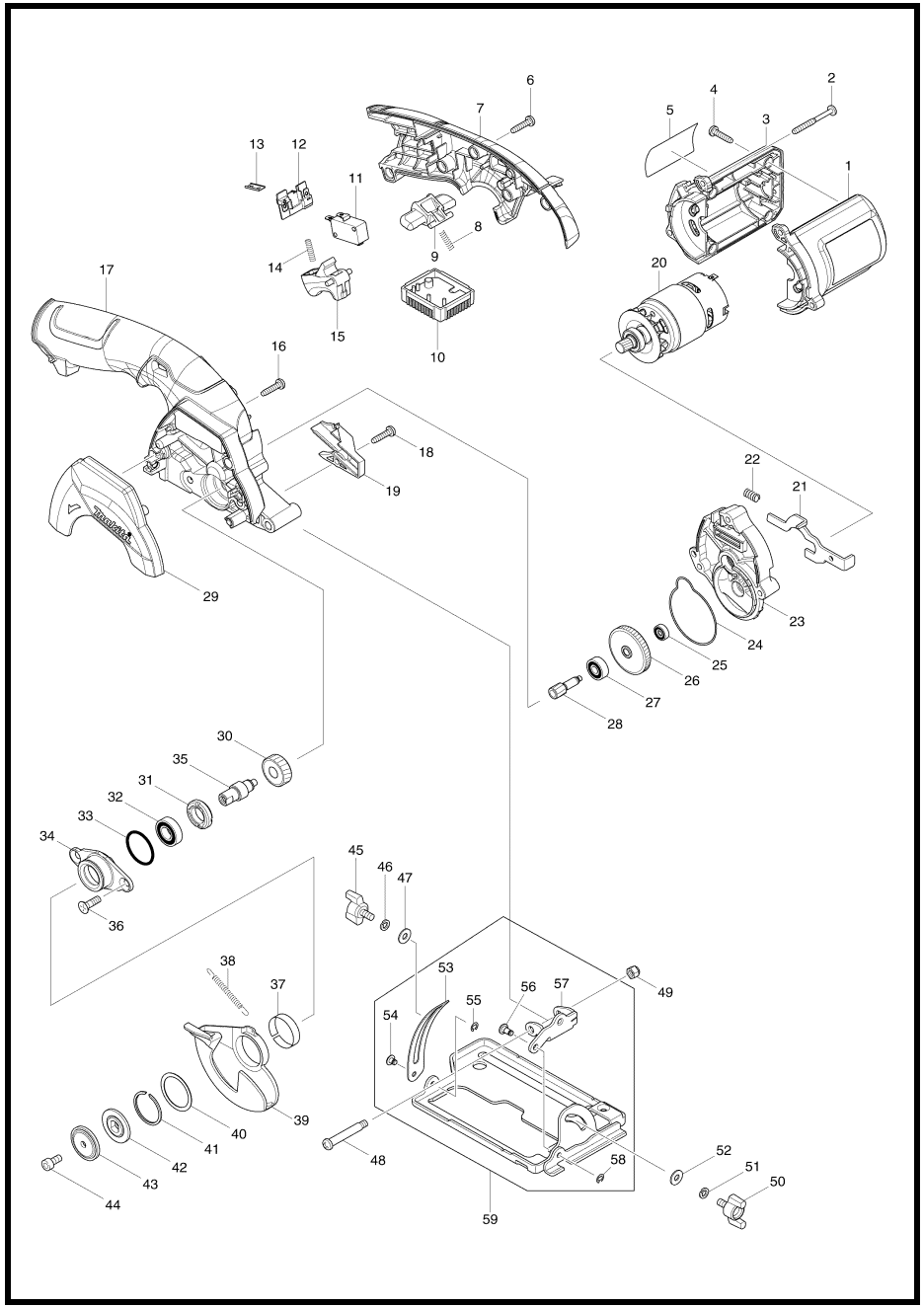

MODEL HS300D

ITEM	PARTS ID	DESCRIPTION	PRICE/BAHT
001	188941-1	MOTOR HOUSING SET	290
002	266560-4	TAPPING SCREW 4X40	50
003	188941-1	MOTOR HOUSING SET	290
004	265995-6	TAPPING SCREW 4X18	40
005	868568-0	HS300D NAME PLATE	
006	265995-6	TAPPING SCREW 4X18	40
007	188966-5	HANDLE SET	810
008	231469-9	COMPRESSION SPRING 4	60
009	419664-3	LOCK OFF LEVER	130
010	638892-3	CONTROLLER UNIT	2,160
011	651891-8	SWITCH V-15-3A6	360
012	643830-2	TERMINAL	130
013	345998-7	SET PLATE	50
014	231469-9	COMPRESSION SPRING 4	60
015	419665-1	SWITCH LEVER	130
016	265995-6	TAPPING SCREW 4X18	40
017	188966-5	HANDLE SET	810
018	265995-6	TAPPING SCREW 4X18	40
019	452234-5	DUCT	110
020	629885-1	DC MOTOR	1,940
021	346337-4	SHAFT LOCK	110
022	233117-6	COMPRESSION SPRING 6	50
023	140625-9	GEAR HOUSING COMPLETE	190
024	424358-7	PACKING	90
025	210036-3	BALL BEARING 604ZZ	230
026	227737-6	HELICAL GEAR 47	310
027	210028-2	BALL BEARING 606ZZ	130
028	227735-0	HELICAL GEAR 9B	250
029	452243-4	BLADE COVER	160
030	227736-8	HERICAL GEAR 28	230
031	285847-5	BEARING RETAINER 14-23	290
032	210069-8	BALL BEARING 6900DDW	350
033	213435-8	O RING 26	60
034	318660-7	BEARING BOX	230
035	325983-6	SPINDLE	200
036	265034-2	+ COUNTERSUNK HEAD SCREW M5X1	60
037	345470-9	THICKNESS RING	50
038	231867-7	TENSION SPRING 4	50
039	452236-1	SAFETY COVER	130
040	267127-1	FLAT WASHER 26	80
041	257938-2	RETAINING RING(EXT) WR-26	90
042	224435-3	INNER FLANGE 28	190
043	224177-9	OUTER FLANGE 28	160
044	922212-4	HEX. SOCKET HEAD BOLT M5X12	30
045	265760-3	THUMB SCREW M5X10	100
046	942101-7	SPRING WASHER 5	100
047	941101-4	FLAT WASHER 5	20
048	265056-2	+ PAN HEAD SCREW M5	170
049	252103-8	HEX. LOCK NUT M5-8	110
050	265760-3	THUMB SCREW M5X10	100
051	942101-7	SPRING WASHER 5	100
052	941101-4	FLAT WASHER 5	20
053	346338-2	DEPTH GUIDE	110
054	268004-0	PIN 4	120
055	961017-7	STOP RING E-3	20
056	268028-6	PIN 5	110
057	346339-0	ANGULAR GUIDE	130
058	961017-7	STOP RING E-3	20
059	135416-1	BASE ASSEMBLY	520
A01	783202-0	HEX. WRENCH 4	70
A02	B-14607	T.C.T. SAW BLADE 85X15X20T	680
A03	194588-1	DC10WA BATTERY CHARGER	3,150
A04	194550-6	BATTERY BL1013 SET	5,450

SERVICE DRAWING

MODEL NO. JN1601

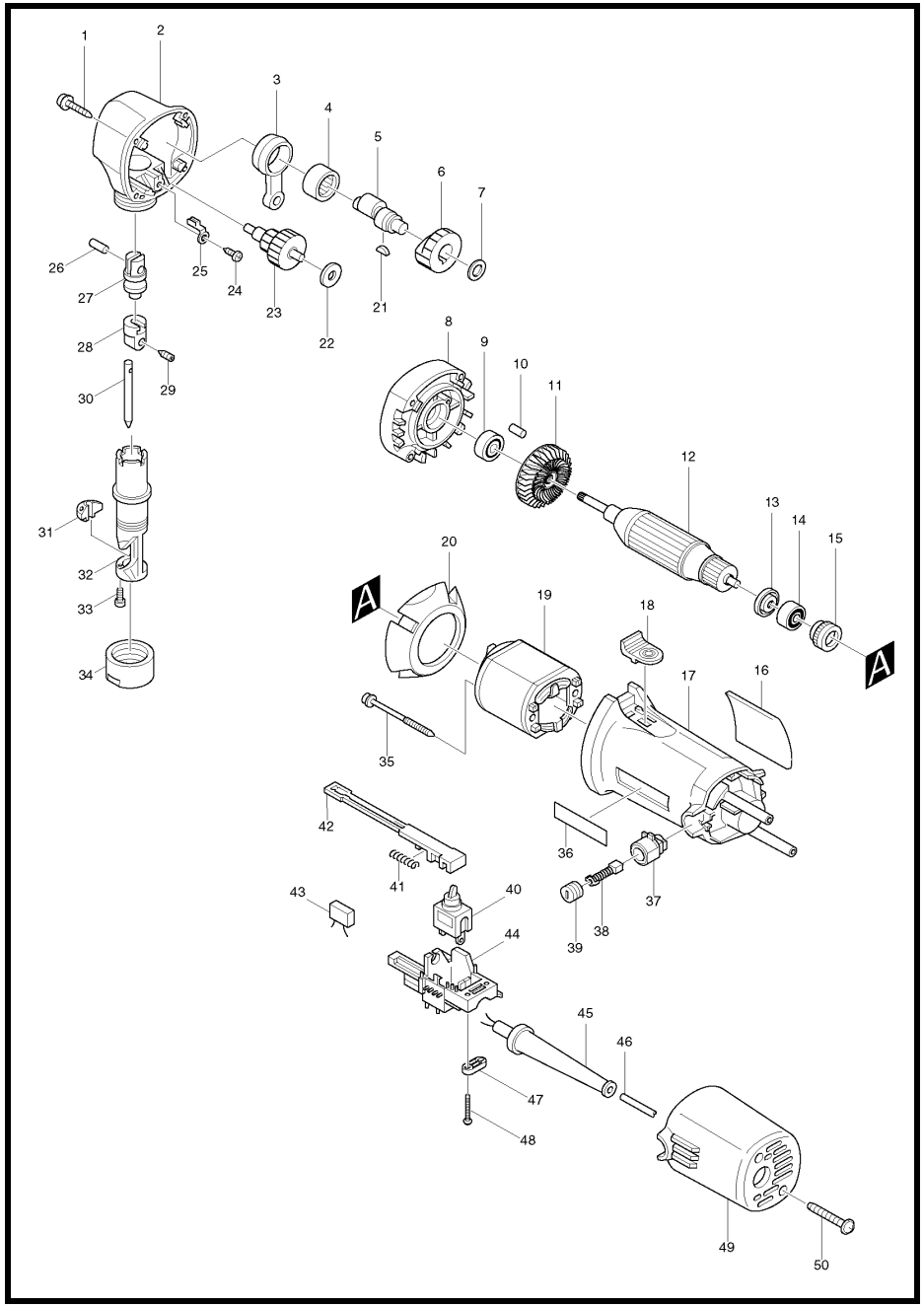

MODEL JN1601

ITEM	PARTS ID	DESCRIPTION	PRICE/BAHT
001	266053-1	TAPPING SCREW 4X35	40
002	159757-1	GEAR HOUSING COMPLETE	3,720
003	331438-1	ROD	1,000
004	212222-2	NEEDLE BEARING 1612	470
005	322704-7	CRANK SHAFT	1,150
006	226286-0	SPUR GEAR 34	1,150
007	253215-0	FLAT WASHER 8	50
008	159758-9	GEAR HOUSING COVER COMPLETE	2,170
009	210005-4	BALL BEARING 608DDW	240
010	263002-9	RUBBER PIN 4	30
012	517513-9	ARMATURE ASS'Y 220V	
013	681636-0	INSULATION WASHER	60
014	211021-9	BALL BEARING 607LLB	240
015	421479-6	RUBBER RING 19	290
017	159755-5	MOTOR HOUSING COMPLETE	830
018	415303-3	SWITCH KNOB	120
019	635013-8	FIELD 220V	
020	415490-8	BAFFLE PLATE	80
021	254002-0	WOODRUFF KEY 3	80
022	267133-6	FLAT WASHER 6	80
023	226123-8	GEAR COMPLETE 13-37	1,840
024	266026-4	TAPPING SCREW BIND CT 4X12	30
025	344116-4	STOPPER	150
026	256111-1	PIN 6	100
027	322703-9	RAM	750
028	322702-1	PUNCH HOLDER	1,580
029	265880-3	H.S.SET SCREW(CONE POINT)M5X8	50
030	A-83951	PUNCH	2,080
031	A-15051	DIE	1,350
032	322701-3	DIE HOLDER	8,530
033	266080-8	HEX. SOCKET HEAD BOLT M3X12	30
034	322748-7	LOCK NUT	710
035	266060-4	TAPPING SCREW 4X65	120
037	643922-7	BRUSH HOLDER	190
038	B-80391	CARBON BRUSH SET CB-411A	
039	643550-8	BRUSH HOLDER CAP 5-8	100
040	651418-4	SWITCH ST115A-40	350
041	233071-4	COMPRESSION SPRING 4	30
042	415541-7	SWITCH LEVER	100
044	687069-7	SUPPORT	160
045	682505-8	CORD GUARD 10-90	150
046	691005-7	POWER SUPPLY CORD 0.75-2-2.0	880
047	687053-2	STRAIN RELIEF	70
048	265995-6	TAPPING SCREW 4X18	40
049	415540-9	REAR COVER	470
050	266053-1	TAPPING SCREW 4X35	40
A01	781028-4	WRENCH 32	230
A02	783208-8	HEX. WRENCH 2.5	80

SERVICE DRAWING

MODEL NO. JN3200

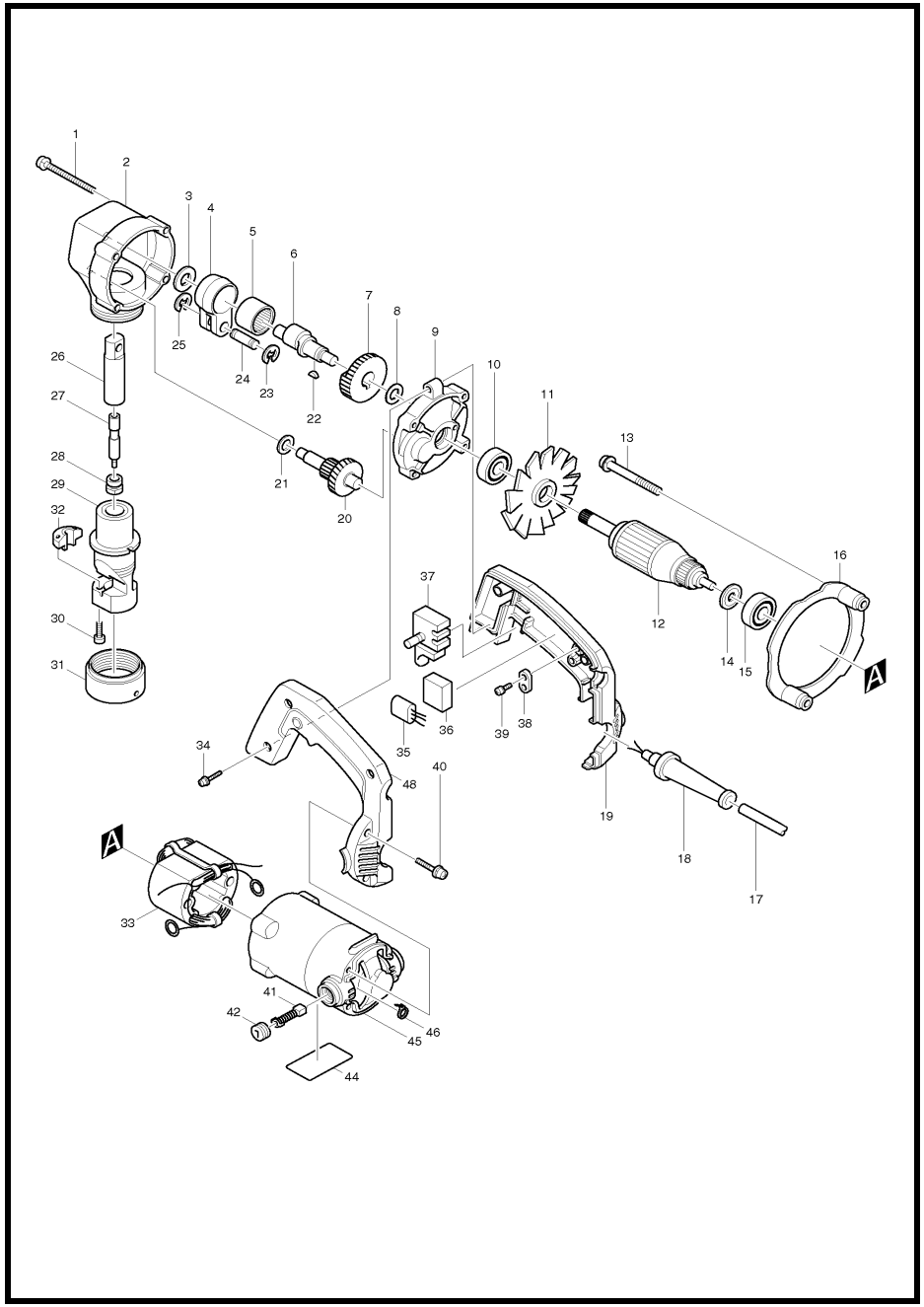

MODEL JN3200

ITEM	PARTS ID	DESCRIPTION	PRICE/BAHT
001	911271-3	PAN HEAD SCREW M5X50	50
002	156838-2	GEAR HOUSING	5,260
003	253759-0	FLAT WASHER 12	80
004	331167-6	ROD	1,580
005	212306-6	NEEDLE BEARING 2020	760
006	321408-8	CRANK SHAFT	2,590
007	221880-3	SPUR GEAR 44	1,140
008	253758-2	FLAT WASHER 10	40
009	156833-2	GEAR HOUSING COVER	1,770
010	211033-2	BALL BEARING 608LB	200
012	512758-4	ARMATURE ASS'Y 220V	
013	911681-4	PAN HEAD SCREW M5X60	100
014	681613-2	INSULATION WASHER	80
015	211033-2	BALL BEARING 608LB	200
016	411876-4	BAFFLE PLATE	270
017	691015-4	POWER SUPPLY CORD 0.75-2-2.5	740
018	682504-0	CORD GUARD 10-85	190
019	181441-0	HANDLE SET	960
020	226060-6	GEAR COMPLETE 15-46	1,910
021	253215-0	FLAT WASHER 8	50
022	254001-2	WOODRUFF KEY 4	80
023	961013-5	STOP RING E-7	20
024	321418-5	PIN 9	190
025	961013-5	STOP RING E-7	20
026	152486-5	PUNCH HOLDER COMPLETE	2,290
027	792728-1	PUNCH	2,180
028	321406-2	SCREW	210
029	152176-0	DICE HOLDER COMPLETE	11,390
030	922127-5	HEX. SOCKET HEAD BOLT M4X16	30
031	321415-1	LOCK NUT	1,550
032	792292-2	DIE	1,940
033	522553-4	FIELD ASS'Y 220V	
034	911243-8	PAN HEAD SCREW M5X25	30
037	651204-3	SWITCH SGEL115CDY	420
038	687001-1	STRAIN RELIEF	50
039	911133-5	PAN HEAD SCREW M4X18	50
040	911243-8	PAN HEAD SCREW M5X25	30
041	B-80298	CARBON BRUSH SET CB-100A	
042	643600-9	BRUSH HOLDER CAP 6-10	70
045	156734-4	MOTOR HOUSING	1,660
046	687010-0	BAND	30
048	181441-0	HANDLE SET	960
400	341796-7	WASHER	80
401	783201-2	HEX. WRENCH 3	50
402	781019-5	WRENCH 50	280

SERVICE DRAWING

MODEL NO. JR100D

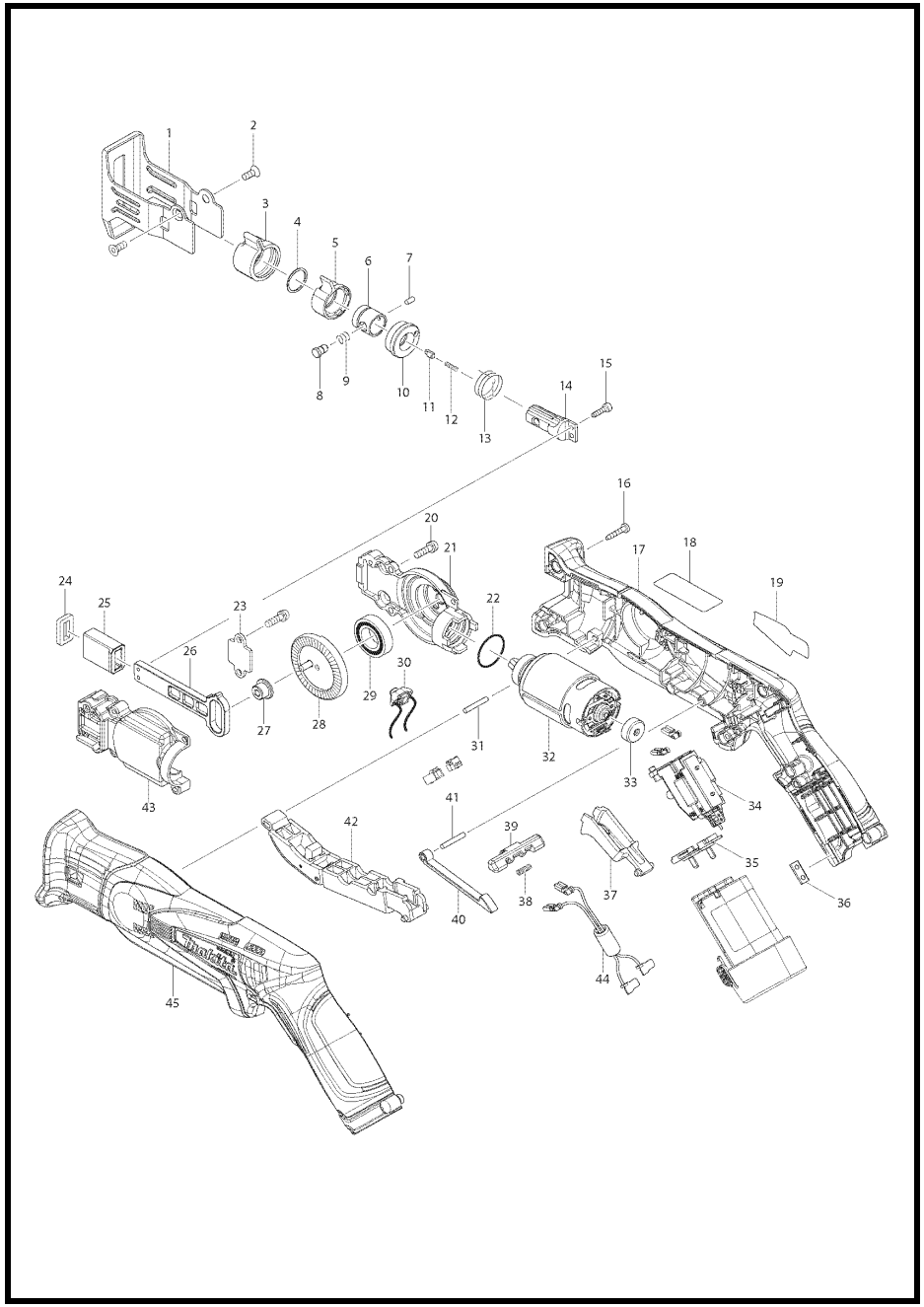

MODEL JR100D

ITEM	PARTS ID	DESCRIPTION	PRICE/BAHT
001	346524-5	SHOE	280
002	265035-0	COUNTERSUNK HEAD SCREW M4X10	80
003	424466-4	PROTECTOR	120
004	257981-1	RETAINING RING (EXT)16	170
005	310496-0	DRIVING SLEEVE	1,690
006	331963-2	GUIDE SLEEVE	220
007	268094-3	PIN 3	190
008	256492-3	SHOULDER PIN 5	180
009	233345-3	COMPRESSION SPRING 6	100
010	453071-0	CONNECTING SLEEVE	90
011	310495-2	PUSH PIN	840
012	233025-1	COMPRESSION SPRING 2	100
013	233594-2	TORTION SPRING 17	20
014	326113-2	BLADE GUIDE	460
015	265910-0	HEX. SOCKET HEAD BOLT M3X12	100
016	266429-2	TAPPING SCREW 3X16	50
017	187270-9	HOUSING SET	1,000
020	266747-8	PAN HEAD SCREW M4X14 WITH WM	30
021	318805-7	GEAR HOUSING	520
022	213961-7	O RING 22	100
023	346525-3	PLATE	60
024	423424-7	SPONGE SEAL	50
025	313220-0	SLIDER GUIDE	180
026	313221-8	SLIDER	250
027	326112-4	COLLARED SLEEVE 4	150
028	141127-8	GEAR COMPLETE	850
029	211242-3	BALL BEARING 6902ZZ	170
030	620028-8	LED CIRCUIT	540
031	256158-5	PIN 3	100
032	629914-0	DC MOTOR	980
033	424467-2	CAP	20
034	650666-2	SWITCH	2,130
035	643830-2	TERMINAL	130
036	345998-7	SET PLATE	50
037	453072-8	SWITCH LEVER R	110
038	233438-6	COMPRESSION SPRING 4	20
039	453070-2	LOCK OFF LEVER R	90
040	313219-5	LINK	150
041	256158-5	PIN 3	100
042	141128-6	SWITCH LEVER F COMPLETE	270
043	318806-5	GEAR HOUSING COVER	480
044	638932-7	LINE FILTER UNIT	270
044	654069-2	RECEPTACLE	110
045	187270-9	HOUSING SET	1,000
A01	B-20432	RECIPROSAW BLADE 100MM 6TPI/BIM	1,040
A02	B-20404	RECIPROSAW BLADE 100MM 18TP/BIM	940

SERVICE DRAWING

MODEL NO. JR102D

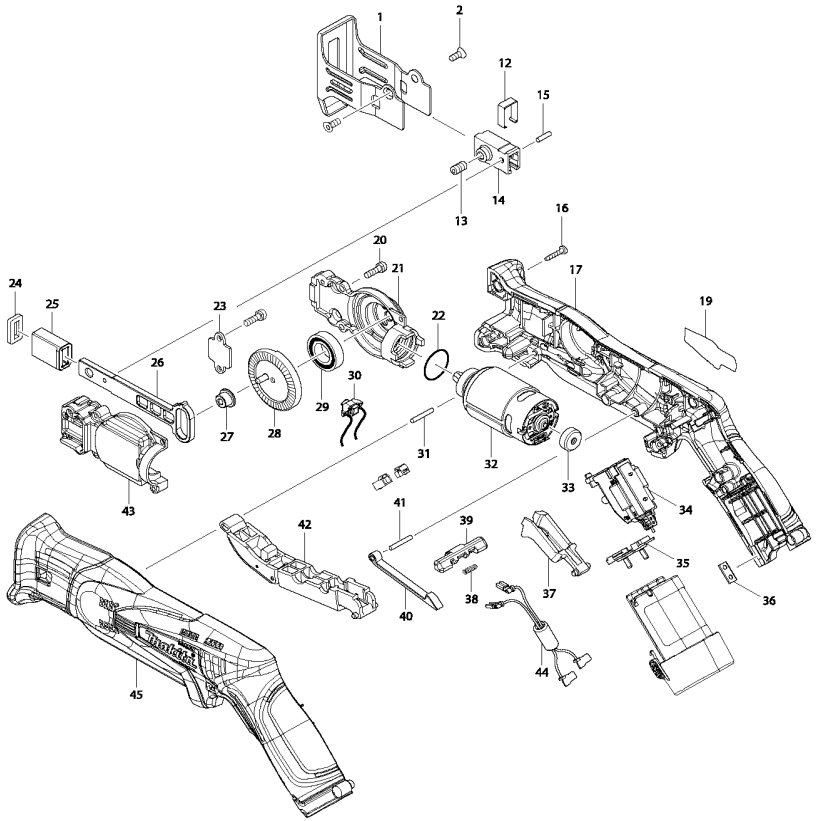

MODEL JR102D

ITEM	PARTS ID	DESCRIPTION	PRICE/BAHT
001	346524-5	SHOE	280
002	265035-0	COUNTERSUNK HEAD SCREW M4X10	80
012	346526-1	CLAMPER	120
013	251961-9	H.S.SET SCREW(FLAT POINT)M6X10	40
014	310497-8	BLADE CLAMP	780
015	256157-7	PIN 3	50
016	266429-2	TAPPING SCREW 3X16	50
017	187273-3	HOUSING SET	1,000
020	266747-8	PAN HEAD SCREW M4X14 WITH WM	30
021	318805-7	GEAR HOUSING	520
022	213961-7	O RING 22	100
023	346525-3	PLATE	60
024	423424-7	SPONGE SEAL	50
025	313220-0	SLIDER GUIDE	180
026	313250-1	SLIDER N	370
027	326112-4	COLLARED SLEEVE 4	150
028	141127-8	GEAR COMPLETE	850
029	211242-3	BALL BEARING 6902ZZ	170
030	620028-8	LED CIRCUIT	540
031	256158-5	PIN 3	100
032	629914-0	DC MOTOR	980
033	424467-2	CAP	60
034	650666-2	SWITCH	2,130
035	643830-2	TERMINAL	130
036	345998-7	SET PLATE	50
037	453072-8	SWITCH LEVER R	110
038	233438-6	COMPRESSION SPRING 4	20
039	453070-2	LOCK OFF LEVER R	90
040	313219-5	LINK	150
041	256158-5	PIN 3	100
042	141128-6	SWITCH LEVER F COMPLETE	270
043	318806-5	GEAR HOUSING COVER	480
045	187273-3	HOUSING SET	1,000
046	234258-1	COMPRESSION SPRING 7	40
A01	B-20432	RECIPROSAW BLADE 100MM	1,040
A02	B-20404	RECIPROSAW BLADE 100MM	940
A03	783201-2	HEX. WRENCH 3	50
A04	194588-1	DC10WA BATTERY CHARGER	3,150
A05	194550-6	BATTERY BL1013 SET	5,450
A06	452137-3	HANDLE	170
A06	162315-4	LATCH	170

SERVICE DRAWING

MODEL NO. JR3050T

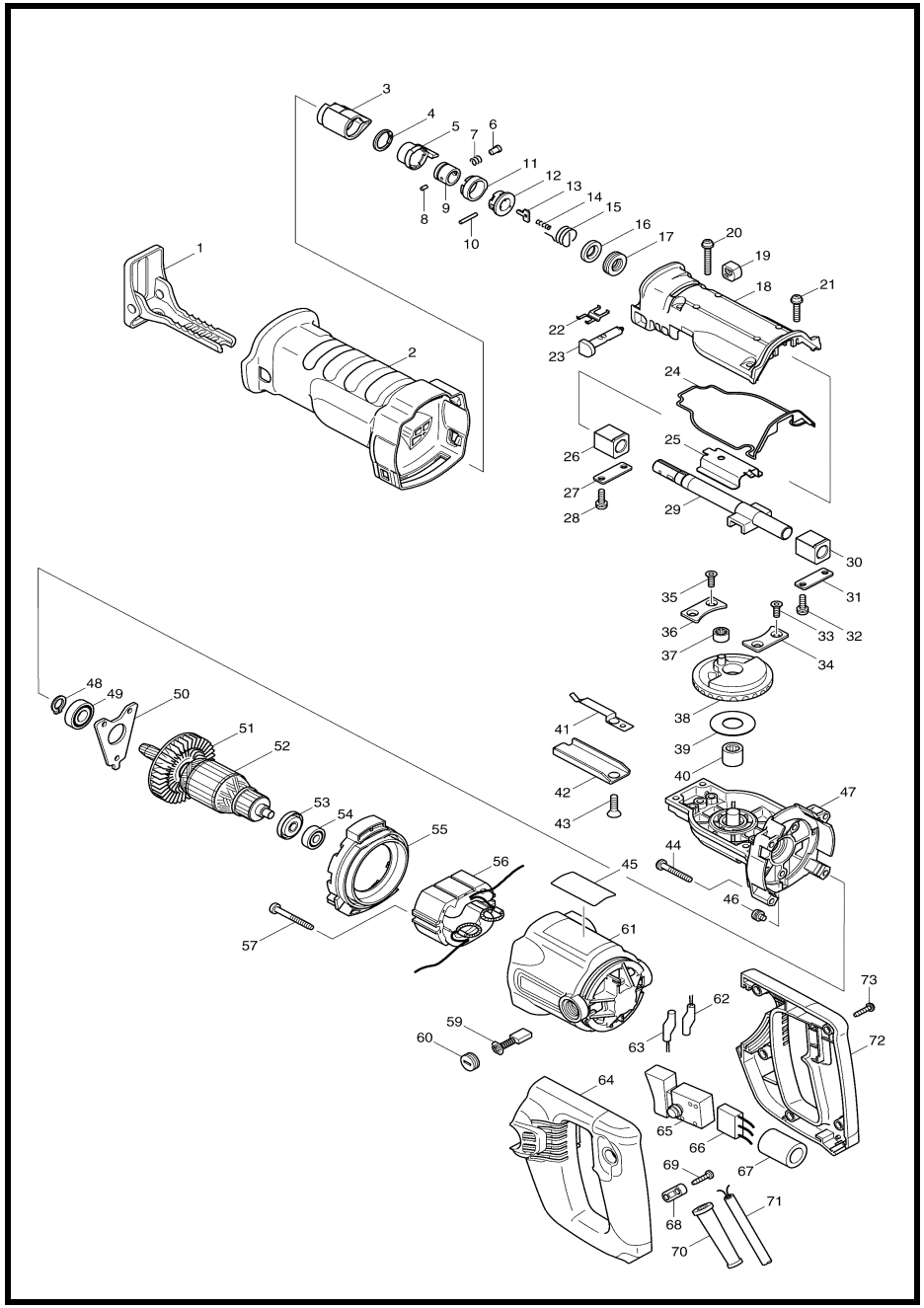

MODEL JR3050T

ITEM	PARTS ID	DESCRIPTION	PRICE/BAHT
001	163451-9	SHOE	430
002	421892-8	INSULATION COVER	460
003	424147-0	PROTECTOR	70
004	257952-8	RETAINING RING (EXT) 18	90
005	310285-3	DRIVING SLEEVE	360
006	256492-3	SHOULDER PIN 5	180
007	233345-3	COMPRESSION SPRING 6	100
008	268094-3	PIN 3	190
009	331720-8	GUIDE SLEEVE	140
010	256158-5	PIN 3	100
011	417791-0	DRIVING SLEEVE GUIDE	200
012	418311-3	SLEEVE	100
013	345214-7	PUSH PLATE	140
014	233025-1	COMPRESSION SPRING 2	100
015	231687-9	TORSION SPRING 17	40
016	213151-2	OIL SEAL 14	200
017	213174-0	X RING 14	280
018	154499-2	GEAR HOUSING COVER COMPLETE	1,220
019	418806-6	CAP	60
020	911258-5	PAN HEAD SCREW M5X35	30
021	911243-8	PAN HEAD SCREW M5X25	30
022	232221-8	LEAF SPRING A	50
023	162236-0	SHIFT BUTTON	230
024	421893-6	SEAL RING	80
025	345480-6	SLIDE PLATE	80
026	214169-6	PLANE BEARING 14	150
027	341462-6	PLATE	70
028	911225-0	PAN HEAD SCREW M5X16	60
029	168405-1	SLIDER	1,050
030	214169-6	PLANE BEARING 14	150
031	341462-6	PLATE	70
032	911225-0	PAN HEAD SCREW M5X16	60
033	265148-7	TORX SOCKET HEAD SCREW M5X14	30
034	345478-3	GEAR PLATE	60
035	265148-7	TORX SOCKET HEAD SCREW M5X14	30
036	345478-3	GEAR PLATE	60
037	212959-1	NEEDLE BEARING 708	310
038	125283-2	GEAR ASS'Y	1,220
039	267290-0	FLAT WASHER 18	60
040	212115-3	NEEDLE BEARING 1216	470
041	232222-6	LEAF SPRING B	60
042	345479-1	SHOE GUIDE	100
043	265165-7	TORXSOCKET C.S.HEADSCREW M6X1	40
044	266373-3	TAPPING SCREW 5X35	70
046	265530-0	HEX.SOCKET HEAD BOLT M5X8	50
047	154497-6	GEAR HOUSING COMPLETE	2,610
048	961052-5	RETAINING RING S-12	40
049	210102-6	BALL BEARING 6001DDW	180
050	285718-6	BEARING RETAINER	100
052	513598-3	ARMATURE ASS'Y 220-240V	
053	681644-1	INSULATION WASHER	60
054	210029-0	BALL BEARING 608ZZ	130
055	418805-8	BAFFLE PLATE	130

ITEM	PARTS ID	DESCRIPTION	PRICE/BAHT
056	525713-7	FIELD ASS'Y 220-240V	
057	266056-5	TAPPING SCREW 5X45	110
059	B-80379	CARBON BRUSH SET CB-303A	190
060	643750-0	BRUSH HOLDER CAP	70
061	154498-4	MOTOR HOUSING COMPLETE	830
064	183920-4	HANDLE SET	640
065	650543-8	SWITCH TG843TB-1	1,210
068	687053-2	STRAIN RELIEF	70
069	265995-6	TAPPING SCREW 4X18	40
070	682573-1	CORD GUARD 10	80
071	691015-4	POWER SUPPLY CORD 0.75-2-2.5	740
072	183920-4	HANDLE SET	640
073	265995-6	TAPPING SCREW 4X18	40
074	125523-8	GEAR HOUSING COVER ASSEMBLY	3,400
A01	824734-9	PLASTIC CARRYING CASE	1,390
A02	B-05038	RECIPRO SAW BLADE FOR METAL	1,410
A03	B-05044	RECIPRO SAW BLADE FOR PLYWOOD	1,400
A04	B-05153	RECIPRO SAW BLADE FOR WOOD	1,490

SERVICE DRAWING

MODEL NO. JR3060T

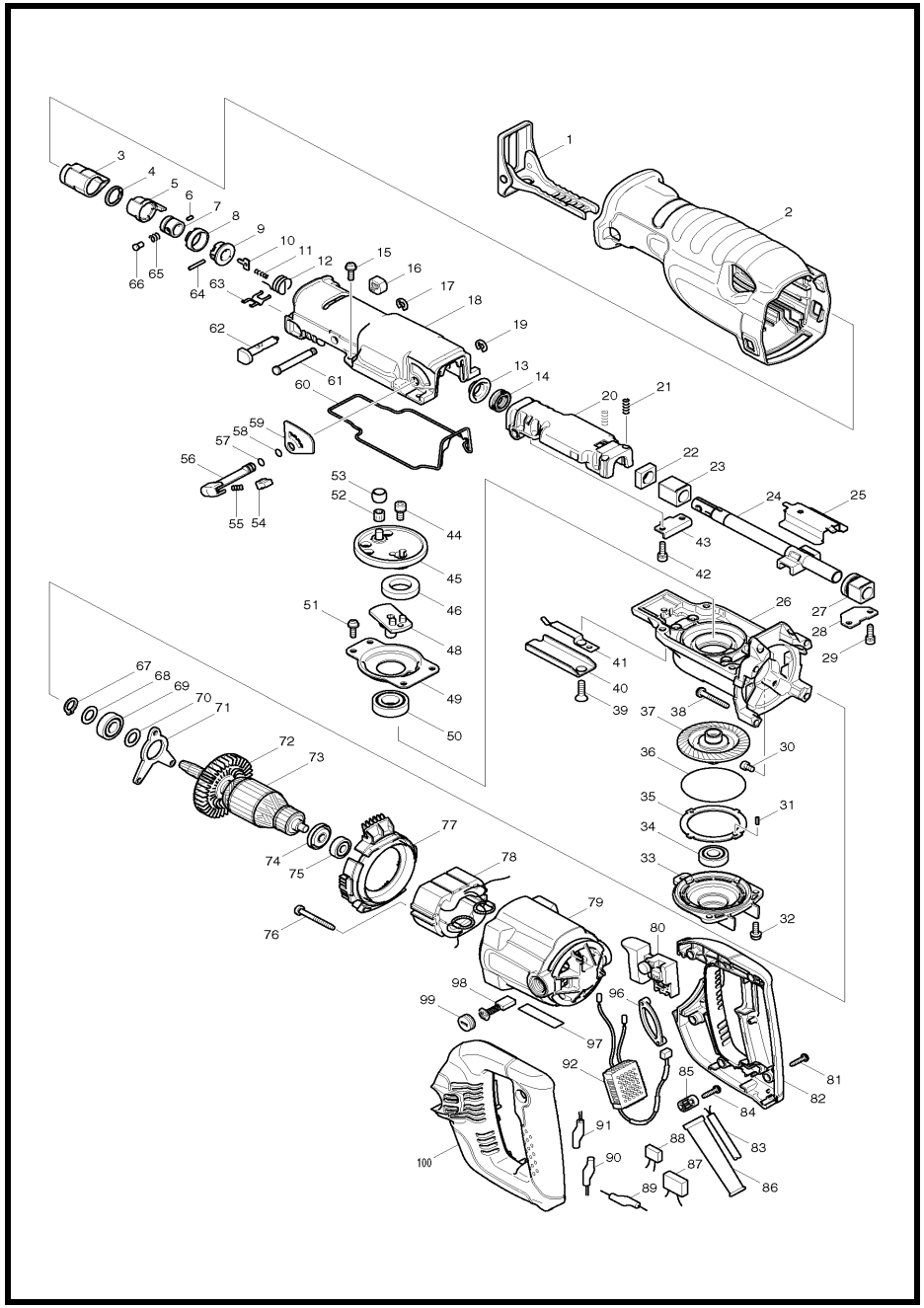

MODEL JR3060T

ITEM	PARTS ID	DESCRIPTION	PRICE/BAHT
001	163451-9	SHOE	430
002	421898-6	INSULATION COVER	930
003	424147-0	PROTECTOR	70
004	257952-8	RETAINING RING (EXT) 18	90
005	310285-3	DRIVING SLEEVE	360
006	268094-3	PIN 3	190
007	331720-8	GUIDE SLEEVE	140
008	417791-0	DRIVING SLEEVE GUIDE	200
009	418311-3	SLEEVE	100
010	345214-7	PUSH PLATE	140
011	233025-1	COMPRESSION SPRING 2	100
012	231687-9	TORSION SPRING 17	40
013	257742-9	SHOULDER SLEEVE 14	40
014	213174-0	X RING 14	280
015	911225-0	PAN HEAD SCREW M5X16	60
016	418806-6	CAP	60
017	961012-7	STOP RING E-6	20
018	154551-6	GEAR HOUSING COVER COMPLETE	1,310
019	961012-7	STOP RING E-6	20
020	154502-9	SLIDER SUPPORT COMPLETE	880
021	233038-2	COMPRESSION SPRING 5	120
022	423343-7	SEAL PLATE 14	90
023	214170-1	PLANE BEARING 14A	120
024	168410-8	SLIDER	1,190
025	345487-2	SLIDE PLATE	110
026	317842-8	GEAR HOUSING	1,030
027	154547-7	BEARING COMPLETE	660
028	345486-4	PLATE B	50
029	911225-0	PAN HEAD SCREW M5X16	60
030	265530-0	HEX.SOCKET HEAD BOLT M5X8	50
032	911225-0	PAN HEAD SCREW M5X16	60
033	317844-4	BEARING BOX	480
034	211101-1	BALL BEARING 6001LLB	450
036	213726-7	O RING 62	60
037	154549-3	TORQUE LIMITER COMPLETE	2,600
038	266373-3	TAPPING SCREW 5X35	70
039	265165-7	TORXSOCKET C.S.HEADSCREW M6X1	40
040	345479-1	SHOE GUIDE	100
041	232222-6	LEAF SPRING B	60
042	911225-0	PAN HEAD SCREW M5X16	60
043	345485-6	PLATE A	50
044	265531-8	HEX.SOCKET HEAD BOLT M6X14	60
045	154545-1	CRANK CAM COMPLETE	730
046	257261-5	RING 21B	180
048	154546-9	CRANK BASE COMPLETE	360
049	285720-9	BEARING RETAINER B	150
050	211251-2	BALL BEARING 6003LLB	530
051	911225-0	PAN HEAD SCREW M5X16	60
052	212957-5	NEEDLE BEARING 710	710
054	418991-5	STOPPER	120
055	231309-1	COMPRESSION SPRING 5	60
056	272247-8	LEVER 20	310
057	213021-5	O RING 5	20
058	213021-5	O RING 5	20
059	413095-8	PLATE C	110
060	421899-4	SEAL RING	80
061	268012-1	PIN 7	280
062	162236-0	SHIFT BUTTON	230
063	232221-8	LEAF SPRING A	50
064	256158-5	PIN 3	100
065	233345-3	COMPRESSION SPRING 6	100
066	256492-3	SHOULDER PIN 5	180
067	961052-5	RETAINING RING S-12	40
068	253744-3	FLAT WASHER 12	50
069	211131-2	BALL BEARING 6001DDW	310
070	253744-3	FLAT WASHER 12	50
071	285719-4	BEARING RETAINER A	140
073	513608-6	ARMATURE ASS'Y 220V	
074	681644-1	INSULATION WASHER	60
075	210029-0	BALL BEARING 608ZZ	130
076	266056-5	TAPPING SCREW 5X45	110
077	418817-1	BAFFLE PLATE	160
078	528805-1	FIELD ASS'Y 220V	
079	154498-4	MOTOR HOUSING COMPLETE	830
080	650222-8	SWITCH TG71ARS-1	960
081	265995-6	TAPPING SCREW 4X18	40
082	183932-7	HANDLE SET	720
083	691015-4	POWER SUPPLY CORD 0.75-2-2.5	740
084	265995-6	TAPPING SCREW 4X18	40
085	687053-2	STRAIN RELIEF	70
086	682573-1	CORD GUARD 10	80
092	631653-0	CONTROLLER	1,160
097	861223-3	JR3060T NAME PLATE	
098	B-80379	CARBON BRUSH SET CB-303A	190
099	643750-0	BRUSH HOLDER CAP	70
100	183932-7	HANDLE SET	720
101	125524-6	GEAR HOUSING COVER ASSEMBLY	5,470
A01	824734-9	PLASTIC CARRYING CASE	1,390
A02	B-05038	RECIPRO SAW BLADE FOR METAL	1,410
A03	B-05044	RECIPRO SAW BLADE FOR PLYWOOD	1,400
A04	B-05153	RECIPRO SAW BLADE FOR WOOD	1,490

SERVICE DRAWING

MODEL NO. JR3070CT

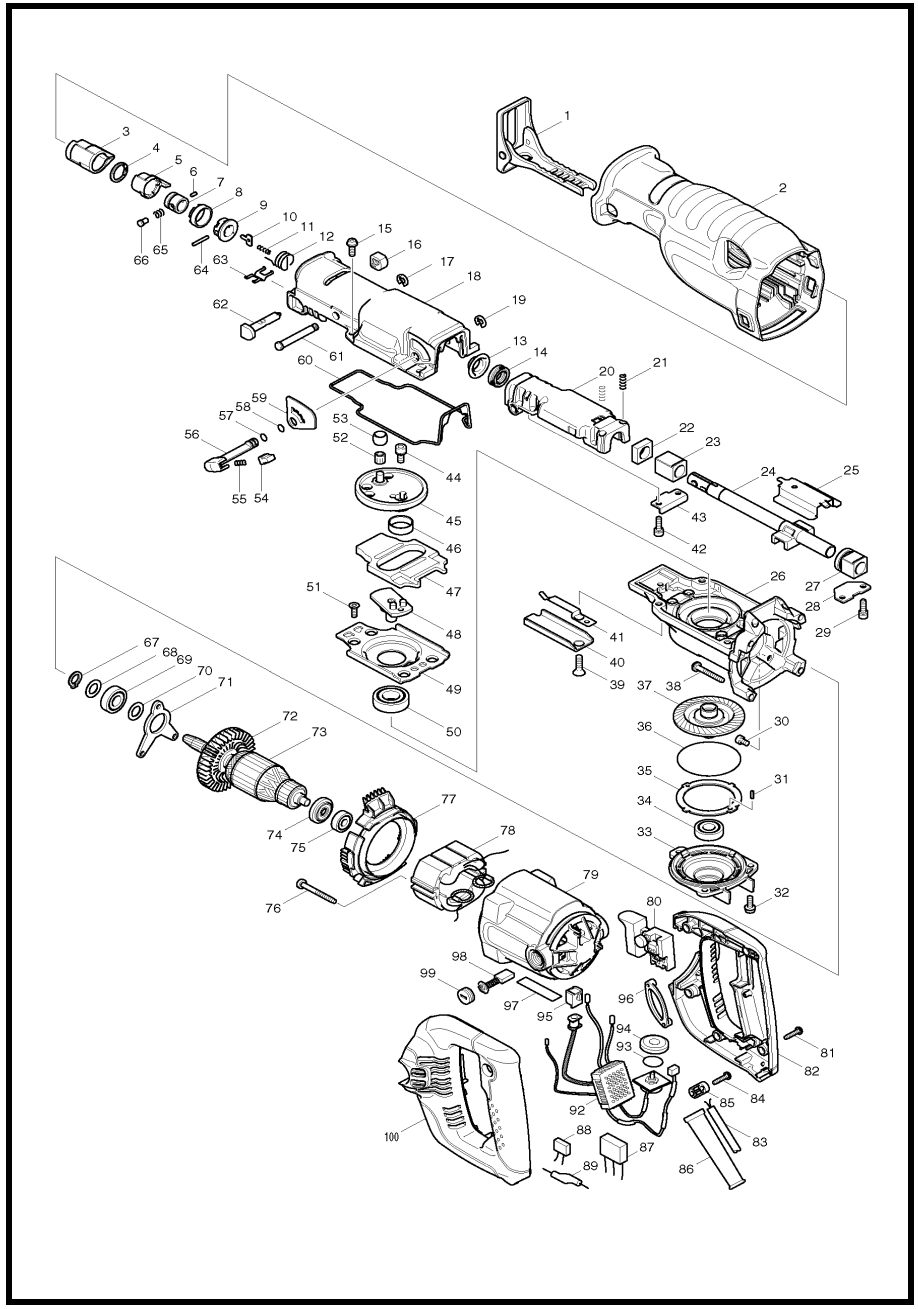

MODEL JR3070CT

ITEM	PARTS ID	DESCRIPTION	PRICE/BAHT
001	163453-5	SHOE	430
002	421904-7	INSULATION COVER	740
003	424147-0	PROTECTOR	70
004	257952-8	RETAINING RING (EXT) 18	90
005	310285-3	DRIVING SLEEVE	360
006	268094-3	PIN 3	190
007	331720-8	GUIDE SLEEVE	140
008	417791-0	DRIVING SLEEVE GUIDE	200
009	418311-3	SLEEVE	100
010	345214-7	PUSH PLATE	140
011	233025-1	COMPRESSION SPRING 2	100
012	231687-9	TORSION SPRING 17	40
013	257742-9	SHOULDER SLEEVE 14	40
014	213174-0	X RING 14	280
015	911225-0	PAN HEAD SCREW M5X16	60
016	418806-6	CAP	60
017	961012-7	STOP RING E-6	20
018	154551-6	GEAR HOUSING COVER COMPLETE	1,310
019	961012-7	STOP RING E-6	20
020	154502-9	SLIDER SUPPORT COMPLETE	880
021	233038-2	COMPRESSION SPRING 5	120
022	423343-7	SEAL PLATE 14	90
023	214170-1	PLANE BEARING 14A	120
024	168410-8	SLIDER	1,190
025	345487-2	SLIDE PLATE	110
026	317842-8	GEAR HOUSING	1,030
027	154547-7	BEARING COMPLETE	660
028	345486-4	PLATE B	50
029	911225-0	PAN HEAD SCREW M5X16	60
030	265530-0	HEX.SOCKET HEAD BOLT M5X8	50
032	911225-0	PAN HEAD SCREW M5X16	60
033	317844-4	BEARING BOX	480
034	211101-1	BALL BEARING 6001LLB	450
036	213726-7	O RING 62	60
037	154549-3	TORQUE LIMITER COMPLETE	2,600
038	266373-3	TAPPING SCREW 5X35	70
039	265165-7	TORXSOCKET C.S.HEADSCREW M6X16	40
040	345479-1	SHOE GUIDE	100
041	232222-6	LEAF SPRING B	60
042	911225-0	PAN HEAD SCREW M5X16	60
043	345485-6	PLATE A	50
044	265531-8	HEX.SOCKET HEAD BOLT M6X14	60
045	154545-1	CRANK CAM COMPLETE	730
046	257265-7	RING 21	150
047	313121-2	COUNTER WEIGHT	40
048	154546-9	CRANK BASE COMPLETE	360
049	345489-8	GUIDE PLATE	200
050	211251-2	BALL BEARING 6003LLB	530
051	265148-7	TORX SOCKET HEAD SCREW M5X14	30
052	212957-5	NEEDLE BEARING 710	710
054	418991-5	STOPPER	120
055	231309-1	COMPRESSION SPRING 5	60
056	272247-8	LEVER 20	310
057	213021-5	O RING 5	20
058	213021-5	O RING 5	20
059	413095-8	PLATE C	110
060	421899-4	SEAL RING	80
061	268012-1	PIN 7	280
062	162236-0	SHIFT BUTTON	230
063	232221-8	LEAF SPRING A	50
064	256158-5	PIN 3	100
065	233345-3	COMPRESSION SPRING 6	100
066	256492-3	SHOULDER PIN 5	180
067	961052-5	RETAINING RING S-12	40
068	253744-3	FLAT WASHER 12	50
069	211131-2	BALL BEARING 6001DDW	310
070	253744-3	FLAT WASHER 12	50
071	285719-4	BEARING RETAINER A	140
073	513603-6	ARMATURE ASS'Y 220-240V	
074	681650-6	INSULATION WASHER	390
075	210029-0	BALL BEARING 608ZZ	130
076	266056-5	TAPPING SCREW 5X45	110
077	418817-1	BAFFLE PLATE	160
078	528803-5	FIELD ASS'Y 220-240V	
079	154498-4	MOTOR HOUSING COMPLETE	830
080	650222-8	SWITCH TG71ARS-1	960
081	265995-6	TAPPING SCREW 4X18	40
082	183933-5	HANDLE SET	800
083	691015-4	POWER SUPPLY CORD 0.75-2-2.5	740
084	265995-6	TAPPING SCREW 4X18	40
085	687053-2	STRAIN RELIEF	70
086	682573-1	CORD GUARD 10	80
092	631651-4	CONTROLLER	2,550
093	213261-5	O RING 17	40
094	418905-4	DIAL	110
095	418518-1	SLEEVE	90
098	B-80379	CARBON BRUSH SET CB-303A	190
099	643750-0	BRUSH HOLDER CAP	70
100	183933-5	HANDLE SET	800
101	125524-6	GEAR HOUSING COVER ASSEMBLY	5,470
A01	824734-9	PLASTIC CARRYING CASE	1,390
A02	B-05038	RECIPRO SAW BLADE FOR METAL	1,410
A03	B-05044	RECIPRO SAW BLADE FOR PLYWOOD	1,400
A04	B-05153	RECIPRO SAW BLADE FOR WOOD	1,490

SERVICE DRAWING

MODEL NO. JS1600

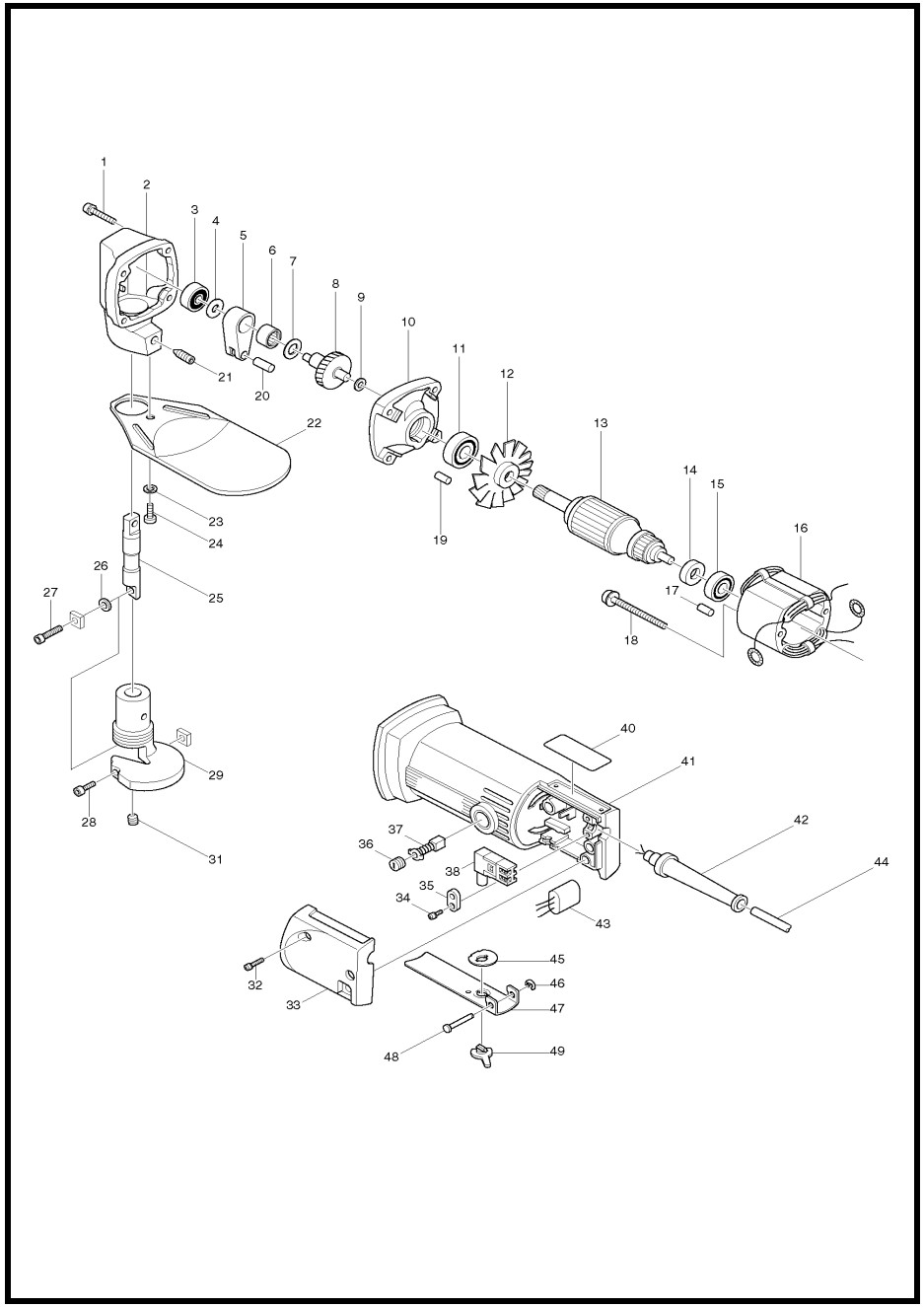

MODEL JS1600

ITEM	PARTS ID	DESCRIPTION	PRICE/BAHT
001	911156-3	PAN HEAD SCREW M4X30	30
002	156725-5	GEAR HOUSING	1,700
003	210025-8	BALL BEARING 627LLB	250
004	253823-7	FLAT WASHER 7	60
005	331151-1	ROD	880
006	212063-6	NEEDLE BEARING 1012	390
007	253758-2	FLAT WASHER 10	40
008	153138-1	CRANK SHAFT COMPLETE	2,600
009	253715-0	FLAT WASHER 6	60
010	156731-0	GEAR HOUSING COVER	1,330
011	211033-2	BALL BEARING 608LB	200
013	511433-9	ARMATURE ASS'Y 220V	
014	681614-0	INSULATION WASHER	80
015	211028-5	BALL BEARING 627LB	290
016	521418-7	FIELD ASS'Y 220V	
017	263002-9	RUBBER PIN 4	30
018	266147-2	TAPPING SCREW 4X55	100
019	263002-9	RUBBER PIN 4	30
020	256110-3	PIN 6	100
021	913427-4	SET SCREW M8X16	100
022	341676-7	PROTECTOR	660
023	942101-7	SPRING WASHER 5	100
024	922206-9	HEX. SOCKET HEAD BOLT M5X10	90
025	321311-3	BLADE HOLDER	1,350
026	253334-2	THIN WASHER 5	80
027	922112-8	HEX. SOCKET HEAD BOLT M4X10	30
028	922127-5	HEX. SOCKET HEAD BOLT M4X16	30
029	311717-3	YOKE	7,350
031	251986-3	H.S.SET SCREW(FLAT POINT)M6X6	40
032	911158-9	PAN HEAD SCREW M4X30	30
033	411827-7	SWITCH COVER	390
034	911133-5	PAN HEAD SCREW M4X18	50
035	687001-1	STRAIN RELIEF	50
036	643550-8	BRUSH HOLDER CAP 5-8	100
037	B-80260	CARBON BRUSH SET CB-65A	
038	651816-2	SWITCH ZGC53	620
041	157720-8	MOTOR HOUSING	1,830
042	682500-8	CORD GUARD 8.5-72	120
044	691055-2	POWER SUPPLY CORD 0.75-2-2.0	1,100
045	232062-2	LEAF SPRING	100
046	961017-7	STOP RING E-3	20
047	133433-5	SWITCH LEVER ASS'Y	570
048	256626-8	PIN 4	150
049	411784-9	SAFETY LOCK	190
400	410048-8	WRENCH HOLDER 3.4	50
401	783201-2	HEX. WRENCH 3	50
402	191383-0	SHEAR BLADE SET	2,280
403	B-80260	CARBON BRUSH SET CB-65A	

SERVICE DRAWING

MODEL NO. JS1601

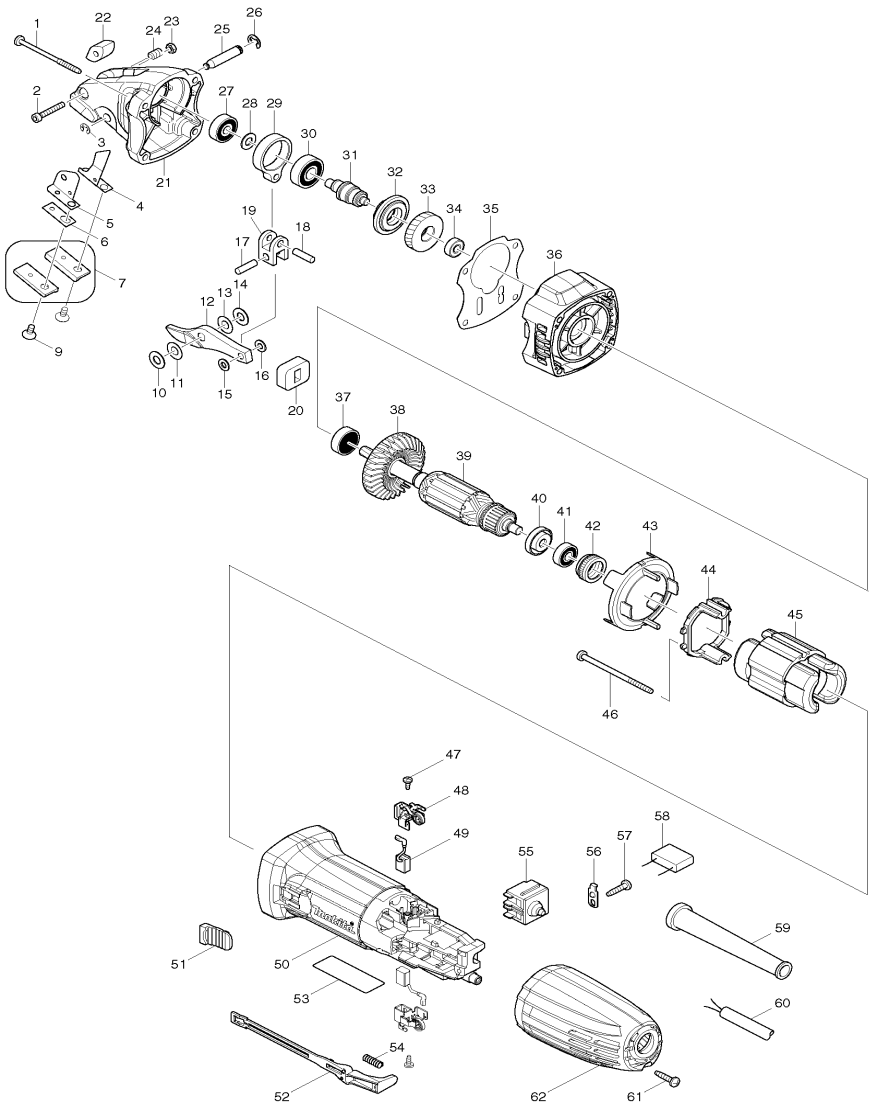

MODEL JS1601

ITEM	PARTS ID	DESCRIPTION	PRICE/BAHT
001	266091-3	TAPPING SCREW 4X50	40
002	922147-9	HEX. SOCKET HEAD BOLT M4X25	40
003	961011-9	STOP RING E-4	20
004	346131-4	SLIP PLATE R	230
005	343480-0	SLIP PLATE L	150
006	343481-8	SPACER	80
007	792533-6	SIDE BLADE SET	3,090
009	251951-2	HEX. SOCKET HEAD BOLT M5X10	50
010	261065-9	TEFLON WASHER 7	80
011	253338-4	THIN WASHER 7	110
012	792534-4	CENTER BLADE	4,460
013	253338-4	THIN WASHER 7	110
014	261065-9	TEFLON WASHER 7	80
015	267010-2	FLAT WASHER 5	80
016	267010-2	FLAT WASHER 5	80
017	256155-1	PIN 5	80
018	256155-1	PIN 5	80
019	331329-6	LINK	700
020	423118-4	DUST COVER	50
021	140506-7	CRANK HOUSING COMPLETE	2,790
022	325727-4	BLOCK	440
023	252083-8	HEX. LOCK NUT M4-7	80
024	266085-8	H.S.SET SCREW(FLAT POINT)M6X10	120
025	256733-7	PIN 7	190
026	961012-7	STOP RING E-6	20
027	211027-7	BALL BEARING 627ZZ	230
028	253133-2	FLAT WASHER 7	50
029	331273-7	ROD	880
030	210067-2	BALL BEARING 6000ZZ	150
031	325948-8	CRANK SHAFT	680
032	325949-6	SEALING SCREW	780
033	227731-8	HELICAL GEAR 40	920
034	210033-9	BALL BEARING 696ZZ	150
035	442161-4	GASKET	120
036	140507-5	GEAR HOUSING COMPLETE	440
037	210005-4	BALL BEARING 608DDW	240
038	240076-7	FAN 56	130
039	517673-7	ARMATURE ASS'Y 220V	
040	681636-0	INSULATION WASHER	60
041	210062-2	BALL BEARING 607ZZ	130
042	421868-5	LABYRINTH RUBBER RING 19	100
043	450796-7	BAFFLE PLATE	90
044	452073-3	SPACER	200
045	623548-1	FIELD	
046	266004-4	TAPPING SCREW 4X70	120
047	265954-0	TAPPING SCREW BIND PT3X8	40
048	643839-4	BRUSH HOLDER 6X9	130
049	195026-6	CARBON BRUSH CB-459	190
050	450795-9	MOTOR HOUSING	410
051	418016-5	SWITCH KNOB	70
052	450797-5	SWITCH LEVER	90
054	233121-5	COMPRESSION SPRING 4	60
055	650621-4	SWITCH PS10	220
056	687682-1	STRAIN RELIEF	50
057	265995-6	TAPPING SCREW 4X18	40
059	682566-8	CORD GUARD 10	80
060	691015-4	POWER SUPPLY CORD 0.75-2-2.5	740
061	265995-6	TAPPING SCREW 4X18	40
062	450794-1	REAR COVER	200
A01	762013-6	THICKNESS GAUGE	290
A02	783201-2	HEX. WRENCH 3	50

SERVICE DRAWING

MODEL NO. JS3200

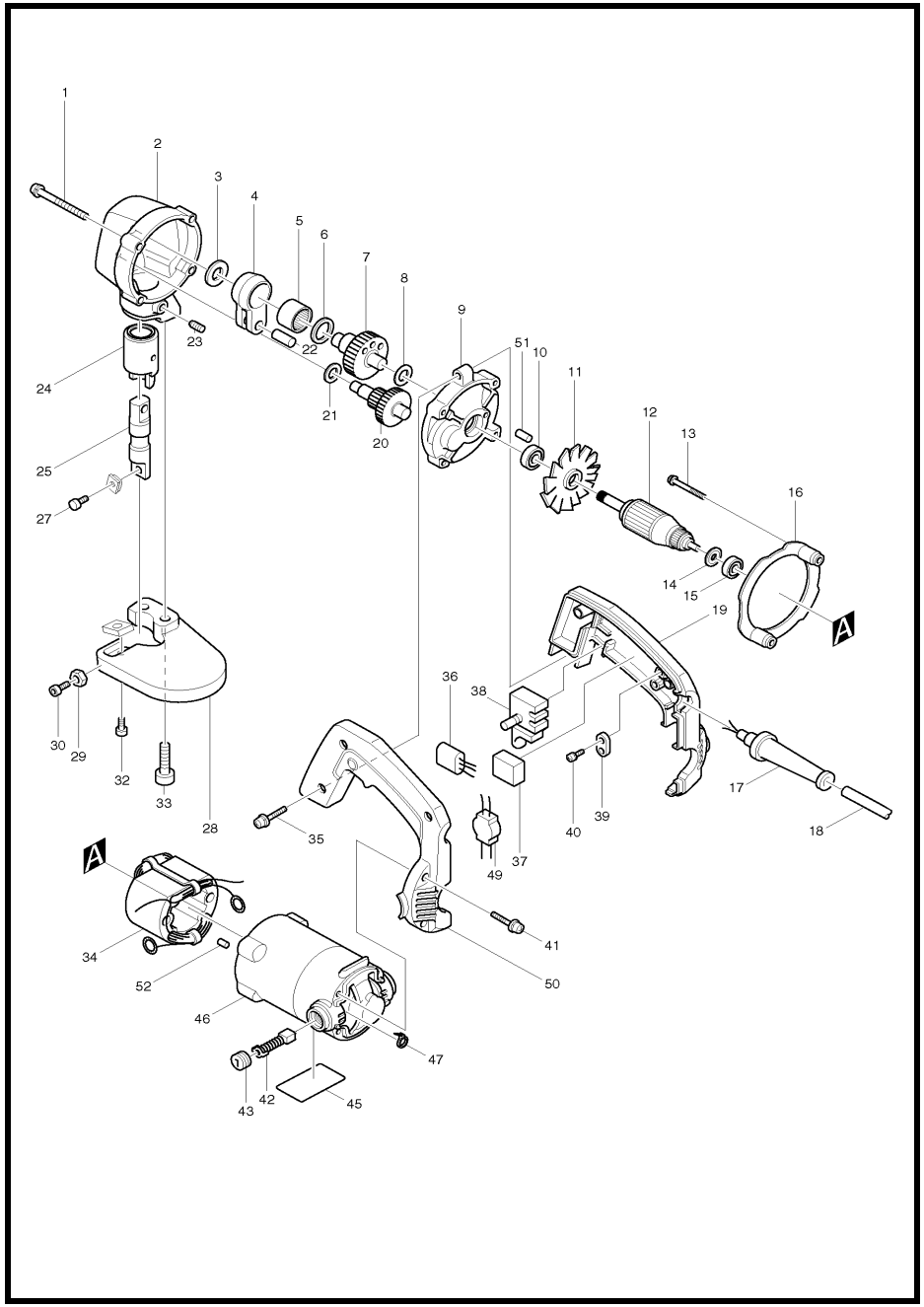

MODEL JS3200

ITEM	PARTS ID	DESCRIPTION	PRICE/BAHT
001	911266-6	PAN HEAD SCREW M5X45	50
002	157640-6	GEAR HOUSING COMPLETE	2,720
003	253759-0	FLAT WASHER 12	80
004	331166-8	ROD	1,530
005	212252-3	NEEDLE BEARING 1816	510
006	253198-4	FLAT WASHER 18	100
007	153141-2	CRANK SHAFT COMPLETE	3,100
008	253758-2	FLAT WASHER 10	40
009	156833-2	GEAR HOUSING COVER	1,770
010	211033-2	BALL BEARING 608LB	200
012	512758-4	ARMATURE ASS'Y 220V	
013	911681-4	PAN HEAD SCREW M5X60	100
014	681613-2	INSULATION WASHER	80
015	211033-2	BALL BEARING 608LB	200
016	411876-4	BAFFLE PLATE	270
017	682504-0	CORD GUARD 10-85	190
018	691015-4	POWER SUPPLY CORD 0.75-2-2.5	740
019	181441-0	HANDLE SET	960
020	226058-3	GEAR COMPLETE 18-46	1,910
021	253215-0	FLAT WASHER 8	50
022	256118-7	PIN 8	130
023	913322-8	SET SCREW M6X14	80
024	321405-4	METAL	1,580
025	321404-6	BLADE HOLDER	1,500
027	922216-6	HEX. SOCKET HEAD BOLT M5X14	110
028	331165-0	YOKE	5,450
029	931203-4	HEX. NUT M5	20
030	922232-8	HEX. SOCKET HEAD BOLT M5X20	50
032	922216-6	HEX. SOCKET HEAD BOLT M5X14	110
033	922452-4	HEX. SOCKET HEAD BOLT M8X30	80
034	522553-4	FIELD ASS'Y 220V	
035	911243-8	PAN HEAD SCREW M5X25	30
038	651204-3	SWITCH SGEL115CDY	420
039	687001-1	STRAIN RELIEF	50
040	911133-5	PAN HEAD SCREW M4X18	50
041	911243-8	PAN HEAD SCREW M5X25	30
042	B-80298	CARBON BRUSH SET CB-100A	
043	643600-9	BRUSH HOLDER CAP 6-10	70
046	156734-4	MOTOR HOUSING	1,660
047	687010-0	BAND	30
050	181441-0	HANDLE SET	960
051	263002-9	RUBBER PIN 4	30
052	263014-2	RUBBER PIN 4	40
400	792287-5	SHEAR BLADES SET	2,700
401	783202-0	HEX. WRENCH 4	70
402	762007-1	THICKNESS GAUGE	230

SERVICE DRAWING

MODEL NO. JV100D

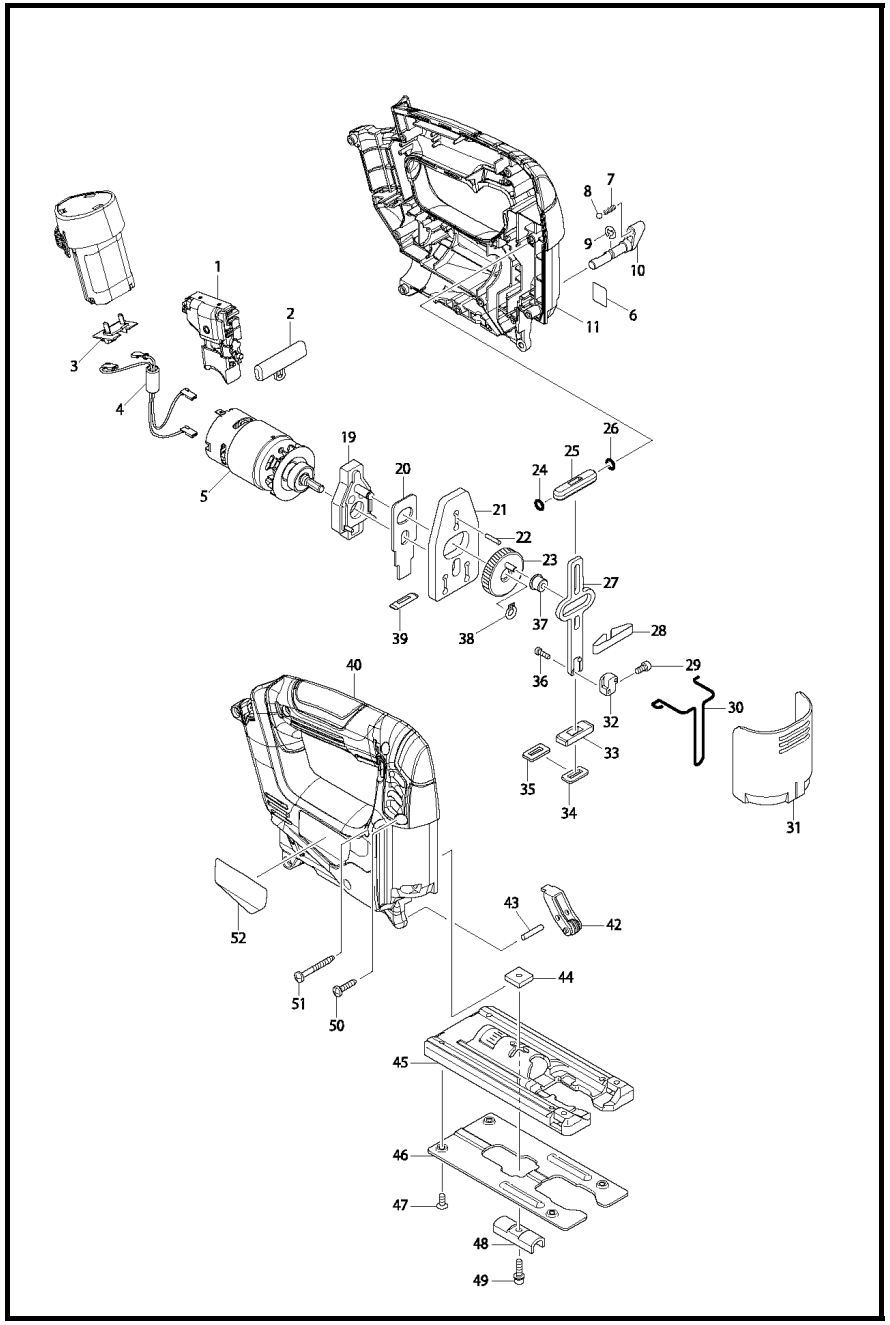

MODEL JV100D

ITEM	PARTS ID	DESCRIPTION	PRICE/BAHT
001	650679-3	SWITCH C3HW-3A-M	1,910
002	417880-1	F/R CHANGE LEVER	110
003	643830-2	TERMINAL	130
005	629926-3	DC MOTOR	1,450
007	233151-6	COMPRESSION SPRING 4	80
008	216008-6	STELL BALL 4	20
009	961011-9	STOP RING E-4	20
010	272267-2	LEVER 19	160
011	187216-5	HOUSING SET INC. 11	1,140
019	152600-3	BEARING CASE COMPLETE	590
020	344683-9	PUSH PLATE	190
021	344614-8	BALANCE PLATE	360
022	256254-9	PIN 3	30
023	153260-4	GEAR COMPLETE	960
024	213038-8	O RING 5	20
025	313082-6	SLIDER GUIDE	130
026	213038-8	O RING 5	20
027	344613-0	SLIDER	410
028	232183-0	LEAF SPRING	110
029	922107-1	HEX. SOCKET HEAD BOLT M4X8	30
030	323748-0	SAFETY WIRE	120
031	416476-5	DUST COVER	160
032	313140-8	BLADE CLAMP	260
033	313086-8	SLIDER SUPPORT	80
034	423307-1	POLY URETANE SPONGE SEAL	60
035	344686-3	SEAL PLATE	80
036	266177-3	HEX. SOCKET HEAD BOLT M3X10	30
037	257683-9	COLLAR SLEEVE	110
038	961002-0	RETAINING RING S-6	20
039	416703-0	DUST SEAL	90
040	187216-5	HOUSING SET INC. 11	
042	158392-2	RETAINER COMPLETE	200
043	256117-9	PIN 4	70
044	343540-8	HOLDER	120
045	317796-9	BASE	440
046	345441-6	BASE PLATE	180
047	912107-9	COUNTERSUNK HEAD SCREW M4X8	30
048	344685-5	CLAMP COMPLETE	90
049	922128-3	HEX. SOCKET HEAD BOLT M4X16	30
050	266326-2	TAPPING SCREW 4X18	30
051	266351-3	TAPPING SCREW 4X35	30
A01	896564-8	JIGSAW BLADE NO.B10	520
A02	783201-2	HEX. WRENCH 3	50
A03	192732-4	GUIDE RULE SET	
A04	***DC10WA	DC10WA BATTERY CHARGER	
A05	194550-6	BATTERY BL1013 SET	

SERVICE DRAWING

MODEL NO. KP0800

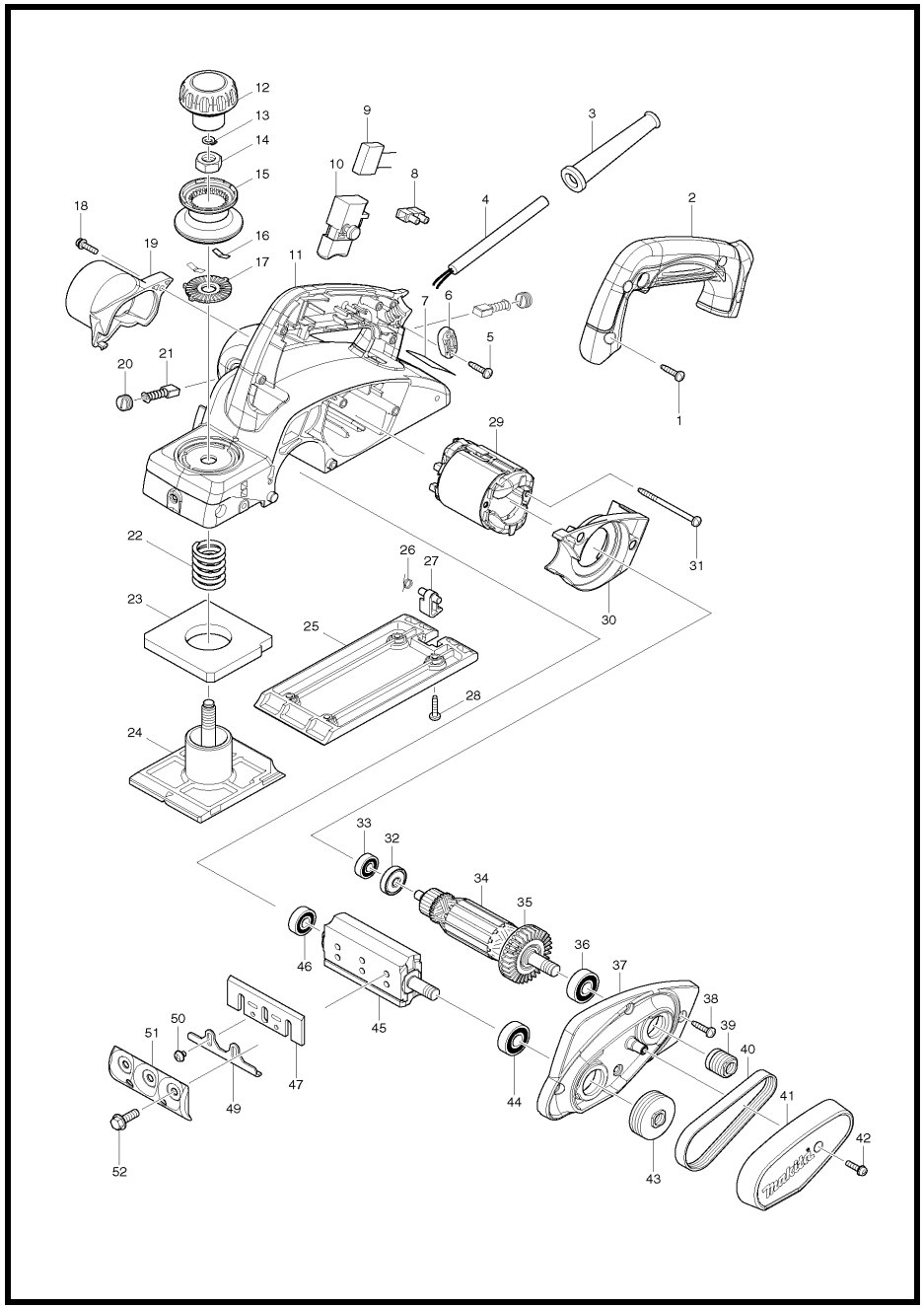

MODEL KP0800

ITEM	PARTS ID	DESCRIPTION	PRICE/BAHT
001	266326-2	TAPPING SCREW 4X18	30
002	451314-4	HANDLE COVER	310
003	682504-0	CORD GUARD 10-85	190
004	691015-4	POWER SUPPLY CORD 0.75-2-2.5	740
005	266326-2	TAPPING SCREW 4X18	30
006	687140-7	STRAIN RELIEF	40
010	650236-7	SWITCH SGEL115CDY-13	350
011	140197-4	MAIN FRAME COMPLETE	1,410
012	451328-3	KNOB COVER	160
013	961004-6	RETAINING RING S-8	20
014	264028-4	HEX. NUT M10	90
015	451324-1	KNOB	380
016	232185-6	LEAF SPRING	160
017	346110-2	CAM PLATE	90
018	911128-8	PAN HEAD SCREW M4X16	30
019	451393-2	CHIP COVER	110
020	643550-8	BRUSH HOLDER CAP 5-8	100
021	B-80391	CARBON BRUSH SET CB-411A	
022	231004-3	COMPRESSION SPRING 18	130
023	421007-7	RUBBER PACKING	150
024	319010-9	FRONT BASE	1,080
025	319009-4	BASE	510
026	231698-4	TORSION SPRING 7	50
027	451392-4	FOOT	50
028	266326-2	TAPPING SCREW 4X18	30
029	593718-5	FIELD ASS'Y 220-240V	
030	451327-5	BAFFLE PLATE	90
031	266334-3	TAPPING SCREW 4X60	30
032	681652-2	INSULATION WASHER	60
033	210017-7	BALL BEARING 607DDW	250
034	515793-1	ARMATURE ASS'Y 220V	
036	211088-7	BALL BEARING 6000DDW	300
037	140201-9	BRACKET COMPLETE	620
038	266326-2	TAPPING SCREW 4X18	30
039	222163-4	V PULLEY 4-20L	150
040	225007-7	POLY V-BELT 4-241	420
041	451326-7	BELT COVER	190
042	911128-8	PAN HEAD SCREW M4X16	30
043	222164-2	V PULLEY 4-37	230
044	211088-7	BALL BEARING 6000DDW	300
045	161061-6	DRUM	1,090
046	211032-4	BALL BEARING 608ZZ	200
049	345644-2	ADJUST PLATE	110
050	265132-2	+ PAN HEAD SCREW M4X5	70
051	187679-5	DRUM PLATE SET	500
052	251609-3	HEX. FLANGE HEAD BOLT M6X17	70
A01	123062-2	BLADE GAUGE ASS'Y	230
A02	782209-3	SOCKET WRENCH 9	220
A03	123004-6	SHARPENING HOLDER ASS'Y	250
A04	165581-2	GUIDE RULE	420
A05	265785-7	THUMB SCREW M5X10	90
A06	794061-7	DRESSING STONE 150-1200	750
A07	824892-1	PLASTIC CARRYING CASE	

SERVICE DRAWING

MODEL NO. KP0810

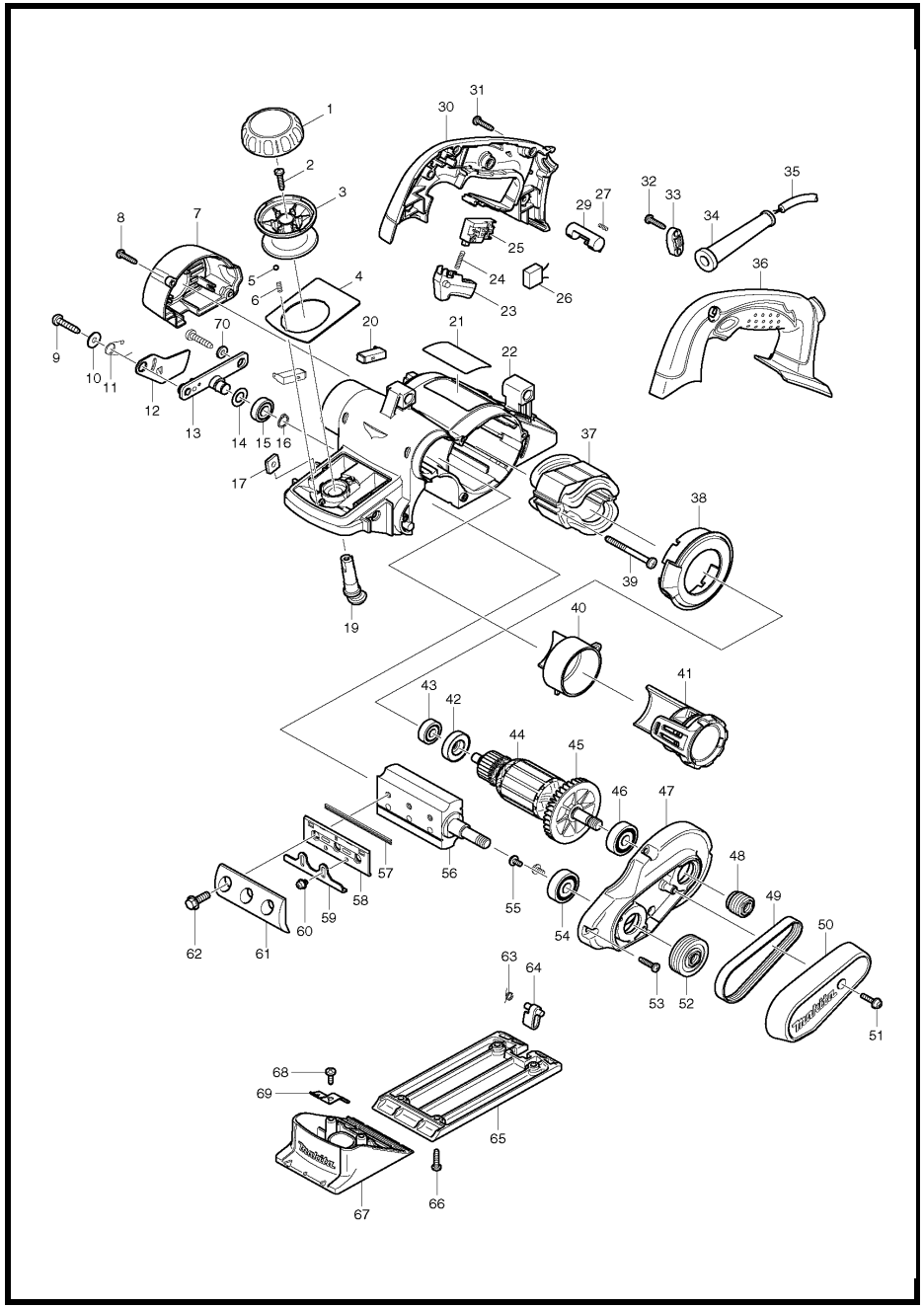

MODEL KP0810

ITEM	PARTS ID	DESCRIPTION	PRICE/BAHT
001	419700-5	KNOB COVER	400
002	265995-6	TAPPING SCREW 4X18	40
003	419699-4	KNOB	190
004	345766-8	FRONT PANEL	320
005	216008-6	STEEL BALL 4	20
006	233325-9	COMPRESSION SPRING 3	100
007	419697-8	REAR COVER	270
008	265995-6	TAPPING SCREW 4X18	40
009	266041-8	TAPPING SCREW 5X25	60
010	253194-2	FLAT WASHER 5	80
011	233521-9	TORSION SPRING 10	120
012	345765-0	DRUM COVER	200
013	158184-9	DRUM HOLDER COMPLETE	1,350
014	253758-2	FLAT WASHER 10	40
015	210057-5	BALL BEARING 6900LLB	410
016	961006-2	RETAINING RING S-10	20
017	264002-2	SQUARE NUT M5	60
019	419702-1	CAM	150
020	194984-3	CARBON BRUSH SET CB-132	
022	419694-4	HOUSING	1,460
023	419703-9	SWITCH LEVER	160
024	233408-5	COMPRESSION SPRING 3	80
025	651922-3	SWITCH TG71B	850
027	231433-0	COMPRESSION SPRING 4	50
029	419705-5	LOCK ON BUTTON	500
030	188215-0	HANDLE SET	1,020
031	265995-6	TAPPING SCREW 4X18	40
032	265995-6	TAPPING SCREW 4X18	40
033	687053-2	STRAIN RELIEF	70
034	682504-0	CORD GUARD 10-85	190
035	691015-4	POWER SUPPLY CORD 0.75-2-2.5	740
036	188215-0	HANDLE SET	1,020
037	525748-8	FIELD ASS'Y 220-240V	
038	419701-3	BAFFLE PLATE	170
039	266095-5	TAPPING SCREW 5X55	120
040	419710-2	NOZZLE	190
041	125353-7	DUCT ASS'Y	340
042	681659-8	INSULATION WASHER	120
043	211031-6	BALL BEARING 608LLB	190
044	513683-2	ARMATURE ASS'Y 220V	
046	211087-9	BALL BEARING 6200DDW	380
047	158149-1	BRACKET COMPLETE	710
048	222125-2	V-PULLEY 4-20L	320
049	225007-7	POLY V-BELT 4-241	420
050	419698-6	BELT COVER	400
051	911133-5	PAN HEAD SCREW M4X18	50
052	222126-0	V-PULLEY 4-37	430
053	265995-6	TAPPING SCREW 4X18	40
054	211087-9	BALL BEARING 6200DDW	380
055	251291-8	+ SCREW M4X8	30
056	158156-4	DRUM COMPLETE	2,690
057	793004-6	PLANER BLADE 82	1,150
059	345644-2	ADJUST PLATE	110
060	251246-3	+ PAN HEAD SCREW M4X5	30
061	187676-1	DRUM PLATE SET	570
062	251609-3	HEX. FLANGE HEAD BOLT M6X17	70
063	231698-4	TORSION SPRING 7	50
064	419706-3	FOOT	120
065	318098-6	BASE	1,430
066	265995-6	TAPPING SCREW 4X18	40
067	158360-5	FRONT BASE COMPLETE	1,530
068	266026-4	TAPPING SCREW BIND CT 4X12	30
069	232232-3	LEAF SPRING	100
070	267012-8	FLAT WASHER 5	80
A01	122785-9	GUIDE RULE ASS'Y	560
A02	123062-2	BLADE GAUGE ASS'Y	230
A03	782209-3	SOCKET WRENCH 9	220
A04	251878-6	SCREW M5X20	150
A05	253807-5	FLAT WASHER 5	40
A06	342390-8	DEPTH GUIDE	200
A07	123004-6	SHARPENING HOLDER ASS'Y	250
A08	194984-3	CARBON BRUSH SET CB-132	
A09	794061-7	DRESSING STONE 150-1200	750
A10	824786-0	PLASTIC CARRYING CASE	
A11	805081-7	KP0810K MODEL NO. LABEL	

SERVICE DRAWING

MODEL NO. KP0810C

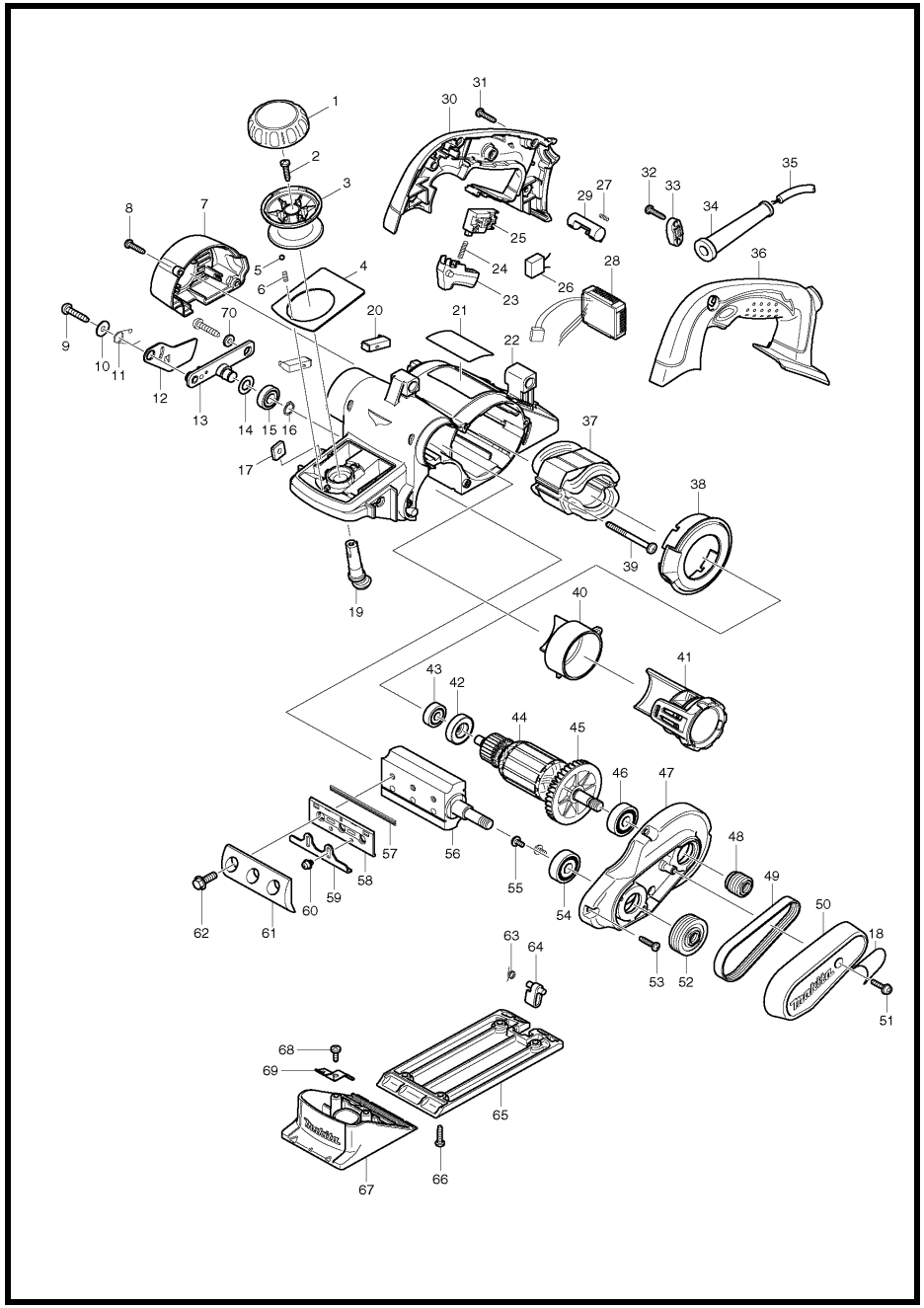

MODEL KP0810C

ITEM	PARTS ID	DESCRIPTION	PRICE/BAHT
001	419700-5	KNOB COVER	400
002	265995-6	TAPPING SCREW 4X18	40
003	419699-4	KNOB	190
004	345766-8	FRONT PANEL	320
005	216008-6	STEEL BALL 4	20
006	233325-9	COMPRESSION SPRING 3	100
007	419697-8	REAR COVER	270
008	265995-6	TAPPING SCREW 4X18	40
009	266041-8	TAPPING SCREW 5X25	60
010	253194-2	FLAT WASHER 5	80
011	233521-9	TORSION SPRING 10	120
012	345765-0	DRUM COVER	200
013	158184-9	DRUM HOLDER COMPLETE	1,350
014	253758-2	FLAT WASHER 10	40
015	210057-5	BALL BEARING 6900LLB	410
016	961006-2	RETAINING RING S-10	20
017	264002-2	SQUARE NUT M5	60
018	805594-8	ELECTRIC SPEED CONTROL LABEL	80
019	419702-1	CAM	150
020	194984-3	CARBON BRUSH SET CB-132	
022	419694-4	HOUSING	1,460
023	419703-9	SWITCH LEVER	
024	233408-5	COMPRESSION SPRING 3	80
025	651922-3	SWITCH TG71B	850
027	231433-0	COMPRESSION SPRING 4	50
028	631737-4	CONTROLLER	2,180
029	419705-5	LOCK ON BUTTON	500
030	188215-0	HANDLE SET	1,020
031	265995-6	TAPPING SCREW 4X18	40
032	265995-6	TAPPING SCREW 4X18	40
033	687053-2	STRAIN RELIEF	70
034	682504-0	CORD GUARD 10-85	190
035	691015-4	POWER SUPPLY CORD 0.75-2-2.5	740
036	188215-0	HANDLE SET	1,020
037	525753-5	FIELD ASS'Y 220-240V	
038	419701-3	BAFFLE PLATE	170
039	266095-5	TAPPING SCREW 5X55	120
040	419710-2	NOZZLE	190
041	125353-7	DUCT ASS'Y	340
042	681660-3	INSULATION WASHER	390
043	211031-6	BALL BEARING 608LLB	190
044	513688-2	ARMATURE ASS'Y 220-240V	
046	211087-9	BALL BEARING 6200DDW	380
047	158149-1	BRACKET COMPLETE	710
048	222125-2	V-PULLEY 4-20L	320
049	225007-7	POLY V-BELT 4-241	420
050	158362-1	BELT COVER COMPLETE	510
051	911133-5	PAN HEAD SCREW M4X18	50
052	222126-0	V-PULLEY 4-37	430
053	265995-6	TAPPING SCREW 4X18	40
054	211087-9	BALL BEARING 6200DDW	380
055	251291-8	+ SCREW M4X8	30
056	158156-4	DRUM COMPLETE	2,690
057	793004-6	PLANER BLADE 82	1,150
059	345644-2	ADJUST PLATE	110
060	251246-3	+ PAN HEAD SCREW M4X5	30
061	187676-1	DRUM PLATE SET	570
062	251609-3	HEX. FLANGE HEAD BOLT M6X17	70
063	231698-4	TORSION SPRING 7	50
064	419706-3	FOOT	120
065	318098-6	BASE	1,430
066	265995-6	TAPPING SCREW 4X18	40
067	158360-5	FRONT BASE COMPLETE	1,530
068	266026-4	TAPPING SCREW BIND CT 4X12	30
069	232232-3	LEAF SPRING	100
070	267012-8	FLAT WASHER 5	80
A01	122785-9	GUIDE RULE ASS'Y	560
A02	123062-2	BLADE GAUGE ASS'Y	230
A03	782209-3	SOCKET WRENCH 9	220
A04	251878-6	SCREW M5X20	150
A05	253807-5	FLAT WASHER 5	40
A06	342390-8	DEPTH GUIDE	200
A07	123004-6	SHARPENING HOLDER ASS'Y	250
A08	194984-3	CARBON BRUSH SET CB-132	
A09	794061-7	DRESSING STONE 150-1200	750

SERVICE DRAWING

MODEL NO. LB1200F

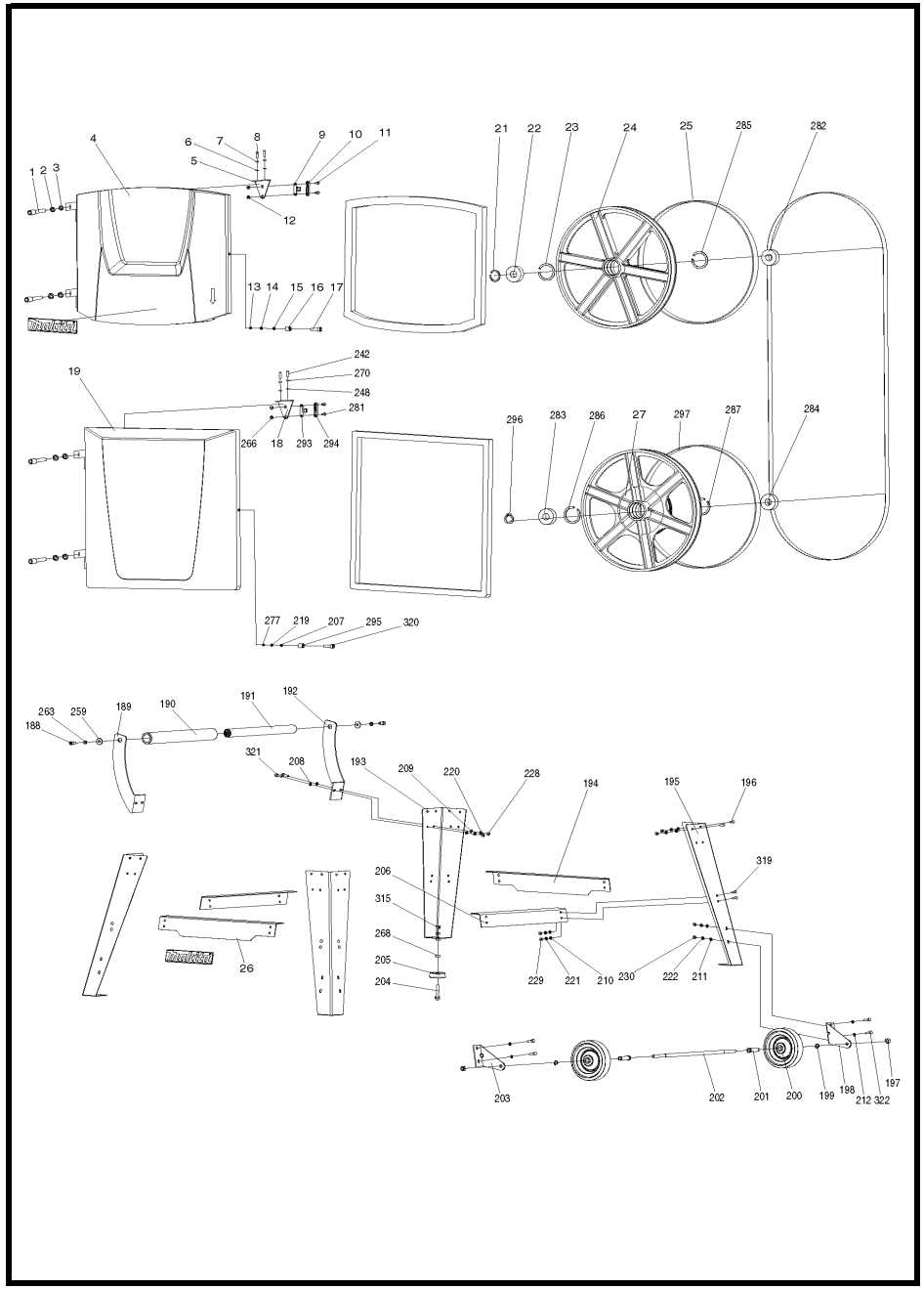

MODEL LB1200F

ITEM	PARTS ID	DESCRIPTION	PRICE/BAHT	ITEM	PARTS ID	DESCRIPTION	PRICE/BAHT
001	JM21000018	HEX.SOCKET HEAD SCREW M5X12	90	054	JM21000077	LIFTING LABEL	110
002	JM21000019	SPRING WASHER 5	60	055	JM21000078	ADJUSTABLE SCREW	110
003	JM21000020	FLAT WASHER 5	60	056	JM21000079	SLIDER B	130
004	JM21000021	UP COVER COMPLETE	960	057	JM21000080	GEAR WHEEL B	110
005	JM21000025	MICRO SWITCH FIX PANEL A	90	058	JM21000081	H.S.BUTTON HEAD SCREW M6X12	90
006	JM21000026	FLAT WASHER 4	60	059	JM21000082	LIFTING KNOB	90
007	JM21000027	SPRING WASHER 4	60	060	JM21000083	BIG WASHER 8	50
008	JM21000028	CROSS HEAD SUNK SCREW M4X10	60	061	JM21000084	SPRING	70
009	JM21000029	MICRO SWITCH PRESS PAW	90	062	JM21000085	LOCKING NUT	90
010	JM21000030	MICRO SWITCH BRACKET	90	063	JM21000086	COLUMN PIN A	110
011	JM21000031	CROSS HEAD SUNK SCREW M4X12	60	064	JM21000087	HEX. SOCKET SET SCREWS M6X10	90
012	JM21000032	HEX NUT M4	90	065	JM21000088	BOLT C	90
013	JM21000033	LOCKING NUT M6	90	066	JM21000089	LOCKING BRACKET	150
014	JM21000034	SPRING WASHER 6	50	067	JM21000090	FIX BRACKET B	230
015	JM21000035	FLAT WASHER 6	50	068	JM21000091	FIX BRACKET A	560
016	JM21000036	SPACER SLEEVE	90	069	JM21000092	COLUMN PIN B	110
017	JM21000037	HEX.SOCKET HEAD SCREW M6X20	90	070	JM21000093	BEARING 6200	200
018	JM21000038	MICRO SWITCH FIX PANEL B	90	071	JM21000094	SLEEVE B	90
019	JM21000039	LOW COVER COMPLETE	960	072	JM21000095	H.S.BOLT M5X20	90
020	JM21000041	MACHINE BODY COMPLETE	11,380	073	JM21000096	COVER	130
021	JM21000043	SHAFT RETAINING RING 17	110	074	JM21000097	CORD PROTECTION TUBE	90
022	JM21000044	BEARING 6203	260	075	JM21000098	HEX THIN NUT M20	110
023	JM21000045	HOLE COLLAR 40	90	076	JM21000099	ECCENTRIC WHEEL 32	170
024	JM21000046	UP SAW WHEEL	1,870	077	JM21000100	ELASTIC PIN 4X32	60
025	JM21000047	TIRE	310	078	JM21000101	INSERT B	110
026	JM21000048	BEAM A COMPLETE	410	079	JM21000102	MICRO SWITCH	780
027	JM21000050	LOW SAW WHEEL	1,870	080	JM21000103	SLEEVE A	170
028	JM21000051	TENSION KNOB	160	081	JM21000104	BRUSH	130
029	JM21000052	SEALING RING	110	082	JM21000105	BRUSH SCREW	110
030	JM21000053	TENSION THREAD ROD	150	083	JM21000106	LOCKNUT M8	90
031	JM21000054	TENSION POINTER	90	084	JM21000107	ACCESSORY STORAGE PLATE	110
032	JM21000055	SPRING BASE	90	085	JM21000108	HEX.SOCKET BUTTON BOLT M4X10	90
033	JM21000056	COMPRESSURE SPRING 45	110	086	JM21000109	HY17 SWITCH	180
034	JM21000057	FIX BRACKET	220	087	JM21000110	LED SWITCH FIX PLATE	110
035	JM21000058	HEX NUT M8	90	088	JM21000111	HY17 SWITCH SHIELD	110
036	JM21000059	SPRING WASHER 8	50	089	JM21000112	LED SWITCH PANEL	110
037	JM21000060	FLAT WASHER 8	60	090	JM21000004	SWITCH	920
038	JM21000061	FIX SIDE PLATE A	480	091	JM21000221	EARTHING TERMINAL 4	20
039	JM21000062	HEX. SOCKET HEAD BOLT M8X16	90	092	JM21000113	STAR WASHER 4	60
040	JM21000063	HEX NUT M6	90	093	JM21000114	HEX NUT M20	90
041	JM21000064	HEX BOLT M6X35	90	094	JM21000115	DUST COLLECTOR PORT B	110
042	JM21000065	HEX BOLT M6X25	90	095	JM21000116	PLATE SPRING	90
043	JM21000066	FIX SIDE PLATE B	390	096	JM21000117	HEX BOLT M5X12	90
044	JM21000067	THIN NUT M10	110	097	JM21000118	HEX NUT M5	90
045	JM21000068	COLUMN PIN D	110	098	JM21000119	DUST BOX	780
046	JM21000069	UP WHEEL SHAFT	230	099	JM21000120	SHAFT RETAINING RING 11	90
047	JM21000070	MOVING BRACKET	190	100	JM21000121	BEARING 6001	220
048	JM21000071	FIX BRACKET	380	101	JM21000122	HOLE COLLAR 28	90
049	JM21000072	DUST SEAL BAR	110	102	JM21000123	TENSION WHEEL	170
050	JM21000073	LIFTING BRACKET COVER	110	103	JM21000124	TENSION WHEEL SHAFT	150
051	JM21000074	RACK	110	104	JM21000125	THREAD ROD	220
052	JM21000075	LIFTING BRACKET	540	105	JM21000126	ELASTIC PIN 4X16	60
053	JM21000076	ELASTIC PIN 4	50	106	JM21000127	LIMIT CIRCLE	110

SERVICE DRAWING

MODEL NO. LB1200F

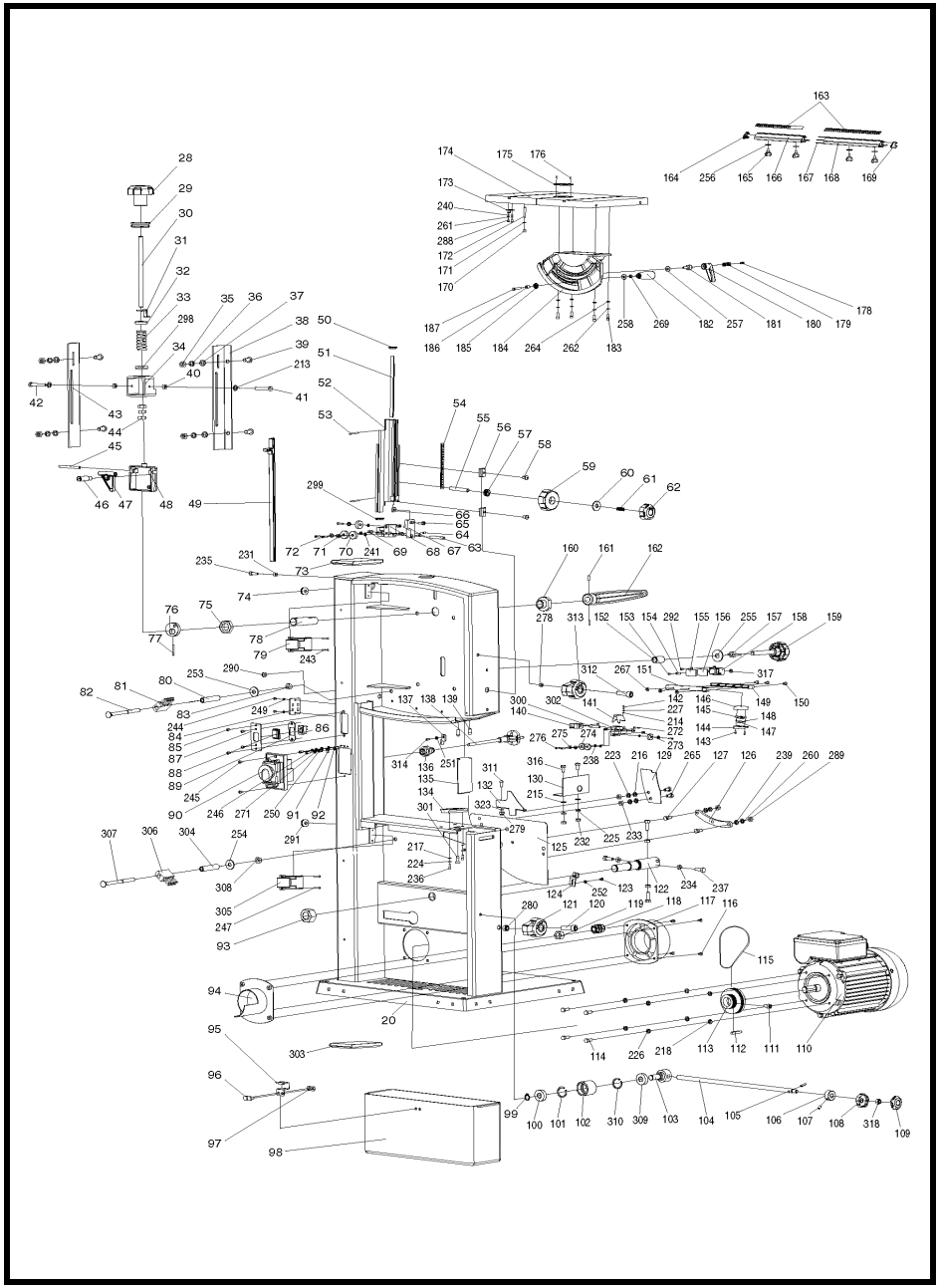

MODEL LB1200F

ITEM	PARTS ID	DESCRIPTION	PRICE/BAHT	ITEM	PARTS ID	DESCRIPTION	PRICE/BAHT
107	JM21000128	HEX.SOCKET SET SCREWS M5X8	90	163	JM21000179	SCALE LABEL	110
108	JM21000129	WHEEL TENSION KNOB A	110	164	JM21000180	FRONT RAIL SIDE COVER B	110
109	JM21000130	WHEEL TENSION KNOB B	110	165	JM21000181	WING KNOB C	130
110	JM21000001	MOTOR	14,000	166	JM21000182	FRONT RAIL A	960
111	JM21000131	H.S.BOLT M6X12	90	167	JM21000183	CONNECTION PIN	60
112	JM21000132	KEY 5X5X20	90	168	JM21000184	FRONT RAIL B	960
113	JM21000133	MOTOR PULLEY	250	169	JM21000185	FRONT RAIL SIDE COVER A	110
114	JM21000134	HEX BOLT M6X12	90	170	JM21000186	CUSHION CAP	90
115	JM21000135	V BELT	310	171	JM21000187	RUBBER RING PAD	90
116	JM21000136	TAPPING SCREW ST4.2X14	90	172	JM21000188	H.S. SET SCREW M8X50	110
117	JM21000137	DUST CONNECTOR PORT	130	173	JM21000189	LIMITED PLATE	90
118	JM21000138	CORD CLAMP PAW	90	174	JM21000190	WORKING TABLE	11,960
119	JM21000139	CORD CLAMP BOLT M10	90	175	JM21000191	BLADE PROTECTION PLATE	90
120	JM21000140	H.S. HEAD SCREW M6X25	90	176	JM21000192	CROSS HEAD SUNK SCREW M3X10	60
121	JM21000141	LATCH KNOB	110	178	JM21000193	HEX.SOCKET HEAD SCREW M6X30	90
122	JM21000142	DRIVING WHEEL SHAFT	360	179	JM21000194	COMPRESSURE SPRING	110
123	JM21000143	CROSS HEAD SUNK SCREW M4X8	60	180	JM21000195	OPERATION HANDLE B ASSY	90
124	JM21000144	MITER POINTER	90	181	JM21000196	LOCKING HANDLE BOLT	90
125	JM21000145	SPACER PLATE	260	182	JM21000197	LOCKING HANDLE A	180
126	JM21000146	SLIDER	150	183	JM21000198	H.S.BOLT M8X20	110
127	JM21000147	BOLT B	90	184	JM21000199	WORKING TABLE TURNION	2,040
129	JM21000148	DUST PROTECTOR PLATE	90	185	JM21000200	GEAR WHEEL A	110
130	JM21000149	PROTECTOR PLATE	90	186	JM21000201	POSITION SLEEVE	90
132	JM21000150	LOW COVER B	90	187	JM21000202	GEAR SHAFT	90
134	JM21000151	FIX BRACKET SLIDER	110	188	JM21000203	H.S.BOLT M8	50
135	JM21000152	PROTECTOR PLATE A	90	189	JM21000204	HANDLE SUPPORT B	500
136	JM21000153	STRAIN & RELIEF	110	190	JM21000205	HOSE	250
137	JM21000154	LIFTING POINTER	90	191	JM21000206	STEEL PIPE ASSEMBLY	110
138	JM21000006	CORD AND PLUG	820	192	JM21000207	HANDLE SUPPORT A	560
139	JM21000155	TAPPING SCREW ST4.2X8	90	193	JM21000208	LEG A	810
140	JM21000156	FIX BRACKET C	260	194	JM21000049	BEAM A	360
141	JM21000157	LOW COVER A	90	195	JM21000209	LEG B	830
142	JM21000158	CROSS HEAD SUNK SCREW M6X10	90	196	JM21000210	SQUARE NECK BOLT M6X16	90
143	JM21000159	TAPPING SCREW ST3.2X8	90	197	JM21000211	LOCKNUT M10	90
144	JM21000160	LED LAMP COVER B	90	198	JM21000212	WHEEL SUPPORT B	230
145	JM21000161	LED REFLECT COVER	110	199	JM21000213	SHAFT RETAINING RING 13	110
146	JM21000162	LED LAMP COVER A	90	200	JM21000214	WHEEL	460
147	JM21000163	LED LAMP COVER C	90	201	JM21000215	ROLLER BUSH	190
148	JM21000164	SELF TAPPING SCREW ST2.2X8	90	202	JM21000216	WHEEL SHAFT	230
149	JM21000165	LED CORD PROTECTOR A	90	203	JM21000217	WHEEL SUPPORT A	230
150	JM21000166	H.S.BOLT M4X20	90	204	JM21000218	HEX BOLT M8X50	110
151	JM21000167	LED CORD PROTECTOR B	90	205	JM21000219	LEG PAD	130
152	JM21000168	SLEEVE	90	206	JM21000220	BEAM B	360
153	JM21000169	CROSS HEAD SUNK SCREW M4X35	60	207	JM21000035	FLAT WASHER 6	50
154	JM21000170	SLEEVE 8	90	208	JM21000035	FLAT WASHER 6	50
155	JM21000171	TRANSFORMER LOW COVER	90	209	JM21000035	FLAT WASHER 6	50
156	JM21000172	TRANSFORMER	620	210	JM21000035	FLAT WASHER 6	50
157	JM21000173	WING NUT M8	110	211	JM21000035	FLAT WASHER 6	50
158	JM21000174	TRANSFORMER UP COVER	90	212	JM21000035	FLAT WASHER 6	50
159	JM21000175	TRACKING KNOB	110	213	JM21000035	FLAT WASHER 6	50
160	JM21000176	SLEEVE C	190	214	JM21000035	FLAT WASHER 6	50
161	JM21000177	H.S. SET SCREWS M6X10	60	215	JM21000035	FLAT WASHER 6	50
162	JM21000178	OPERATION HANDLE A	220	216	JM21000035	FLAT WASHER 6	50

SERVICE DRAWING

MODEL NO. LB1200F

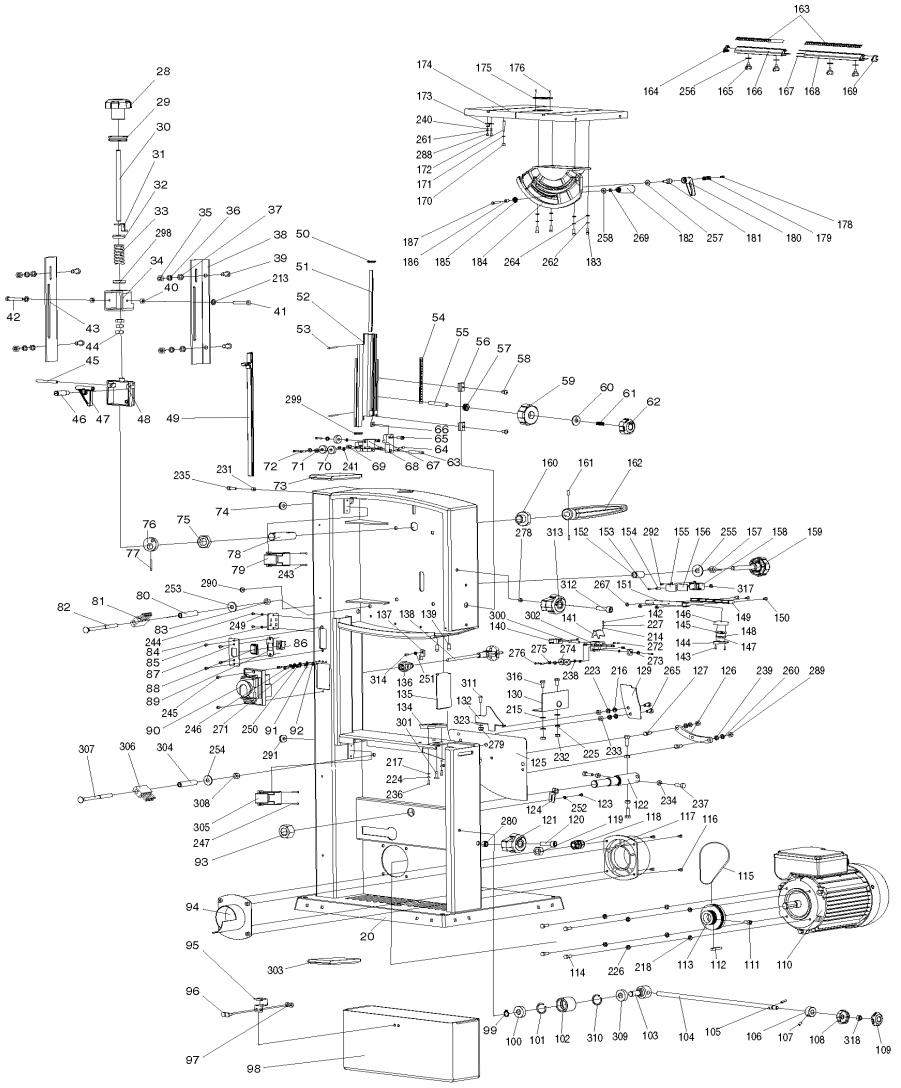

MODEL LB1200F

ITEM	PARTS ID	DESCRIPTION	PRICE/BAHT	ITEM	PARTS ID	DESCRIPTION	PRICE/BAHT
217	JM21000035	FLAT WASHER 6	50	270	JM21000027	SPRING WASHER 4	60
218	JM21000035	FLAT WASHER 6	50	271	JM21000027	SPRING WASHER 4	60
219	JM21000034	SPRING WASHER 6	50	272	JM21000087	HEX. SOCKET SET SCREWS M6X10	90
220	JM21000034	SPRING WASHER 6	50	273	JM21000092	COLUMN PIN B	110
221	JM21000034	SPRING WASHER 6	50	274	JM21000093	BEARING 6200	200
222	JM21000034	SPRING WASHER 6	50	275	JM21000094	SLEEVE B	90
223	JM21000034	SPRING WASHER 6	50	276	JM21000095	H.S.BOLT M5X20	90
224	JM21000034	SPRING WASHER 6	50	277	JM21000033	LOCKING NUT M6	90
225	JM21000034	SPRING WASHER 6	50	278	JM21000033	LOCKING NUT M6	90
226	JM21000034	SPRING WASHER 6	50	279	JM21000033	LOCKING NUT M6	90
227	JM21000034	SPRING WASHER 6	50	280	JM21000033	LOCKING NUT M6	90
228	JM21000063	HEX NUT M6	90	281	JM21000031	CROSS HEAD SUNK SCREW M4X12	60
229	JM21000063	HEX NUT M6	90	282	JM21000044	BEARING 6203	260
230	JM21000063	HEX NUT M6	90	283	JM21000044	BEARING 6203	260
231	JM21000063	HEX NUT M6	90	284	JM21000044	BEARING 6203	260
232	JM21000063	HEX NUT M6	90	285	JM21000045	HOLE COLLAR 40	90
233	JM21000063	HEX NUT M6	90	286	JM21000045	HOLE COLLAR 40	90
234	JM21000063	HEX NUT M6	90	287	JM21000045	HOLE COLLAR 40	90
235	JM21000037	HEX.SOCKET HEAD SCREW M6X20	90	288	JM21000117	HEX BOLT M5X12	90
236	JM21000037	HEX.SOCKET HEAD SCREW M6X20	90	289	JM21000118	HEX NUT M5	90
237	JM21000037	HEX.SOCKET HEAD SCREW M6X20	90	290	JM21000097	CORD PROTECTION TUBE	90
238	JM21000020	FLAT WASHER 5	60	291	JM21000097	CORD PROTECTION TUBE	90
239	JM21000020	FLAT WASHER 5	60	292	JM21000159	TAPPING SCREW ST3.2X8	90
240	JM21000020	FLAT WASHER 5	60	293	JM21000029	MICRO SWITCH PRESS PAW	90
241	JM21000020	FLAT WASHER 5	60	294	JM21000030	MICRO SWITCH BRACKET	90
242	JM21000028	CROSS HEAD SUNK SCREW M4X10	60	295	JM21000036	SPACER SLEEVE	90
243	JM21000028	CROSS HEAD SUNK SCREW M4X10	60	296	JM21000043	SHAFT RETAINING RING 17	110
244	JM21000028	CROSS HEAD SUNK SCREW M4X10	60	297	JM21000047	TIRE	310
245	JM21000028	CROSS HEAD SUNK SCREW M4X10	60	298	JM21000055	SPRING BASE	90
246	JM21000028	CROSS HEAD SUNK SCREW M4X10	60	299	JM21000073	LIFTING BRACKET COVER	110
247	JM21000028	CROSS HEAD SUNK SCREW M4X10	60	300	JM21000086	COLUMN PIN A	110
248	JM21000026	FLAT WASHER 4	60	301	JM21000088	BOLT C	90
249	JM21000026	FLAT WASHER 4	60	302	JM21000091	FIX BRACKET A	560
250	JM21000026	FLAT WASHER 4	60	303	JM21000096	COVER	130
251	JM21000026	FLAT WASHER 4	60	304	JM21000103	SLEEVE A	170
252	JM21000026	FLAT WASHER 4	60	305	JM21000102	MICRO SWITCH	780
253	JM21000083	BIG WASHER 8	60	306	JM21000104	BRUSH	130
254	JM21000083	BIG WASHER 8	60	307	JM21000105	BRUSH SCREW	110
255	JM21000083	BIG WASHER 8	60	308	JM21000106	LOCKNUT M8	90
256	JM21000083	BIG WASHER 8	60	309	JM21000121	BEARING 6001	220
257	JM21000083	BIG WASHER 8	60	310	JM21000122	HOLE COLLAR 28	90
258	JM21000083	BIG WASHER 8	60	311	JM21000131	H.S.BOLT M6X12	90
259	JM21000083	BIG WASHER 8	60	312	JM21000140	H.S. HEAD SCREW M6X25	90
260	JM21000019	SPRING WASHER 5	60	313	JM21000141	LATCH KNOB	110
261	JM21000019	SPRING WASHER 5	60	314	JM21000143	CROSS HEAD SUNK SCREW M4X8	60
262	JM21000059	SPRING WASHER 8	60	315	JM21000173	WING NUT M8	110
263	JM21000059	SPRING WASHER 8	60	316	JM21000134	HEX BOLT M6X12	90
264	JM21000060	FLAT WASHER 8	60	317	JM21000032	HEX NUT M4	90
265	JM21000134	HEX BOLT M6X12	90	318	JM21000106	LOCKNUT M8	90
266	JM21000032	HEX NUT M4	90	319	JM21000210	SQUARE NECK BOLT M6X16	90
267	JM21000032	HEX NUT M4	90	320	JM21000037	HEX.SOCKET HEAD SCREW M6X20	90
268	JM21000058	HEX NUT M8	90	321	JM21000037	HEX.SOCKET HEAD SCREW M6X20	90
269	JM21000058	HEX NUT M8	90	322	JM21000037	HEX.SOCKET HEAD SCREW M6X20	90

SERVICE DRAWING

MODEL NO. LB1200F

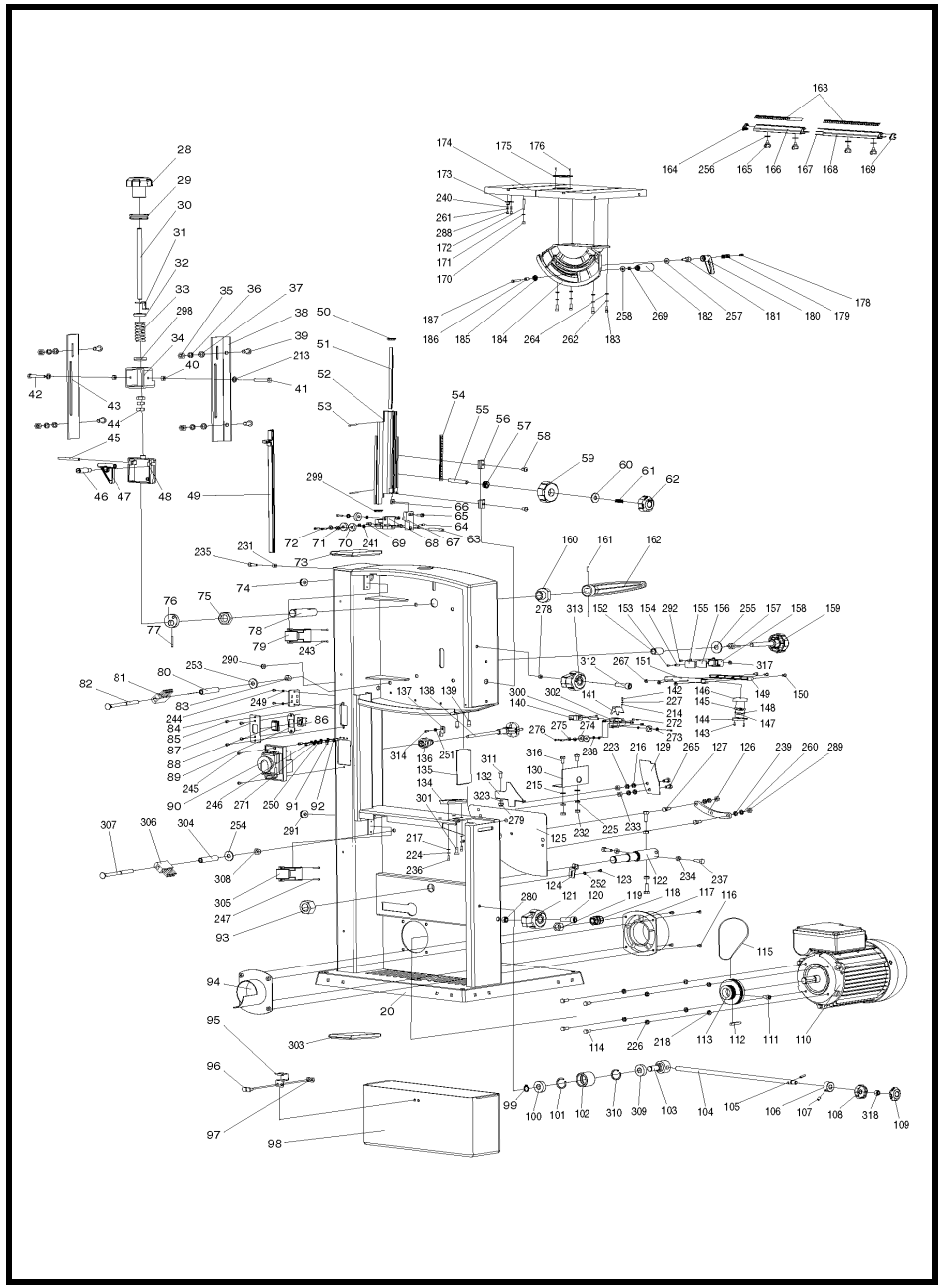

MODEL LB1200F

ITEM	PARTS ID	DESCRIPTION	PRICE/BAHT
323	JM21000035	FLAT WASHER 6	50
A01	JM21080230	RIP FENCE ASSY	1,640
A02	JM21080260	MITER GUAGE ASSY	820
A03	JM21080290	PUSH STICK	150
A04	JM21080291	HEX WRENCH 4	90
A05	JM21080292	HEX WRENCH 5	90
A06	JM21080293	DUST COLLECTOR PORT A	130
A07	JM21080294	SAW BLADE 6	1,470
A08	JM21080295	SAW BLADE 13	2,200
A09	JM21080296	SAW BLADE 16	2,640
A10	JM21080297	SAW BLADE 16	2,810

SERVICE DRAWING

MODEL NO. LC1230

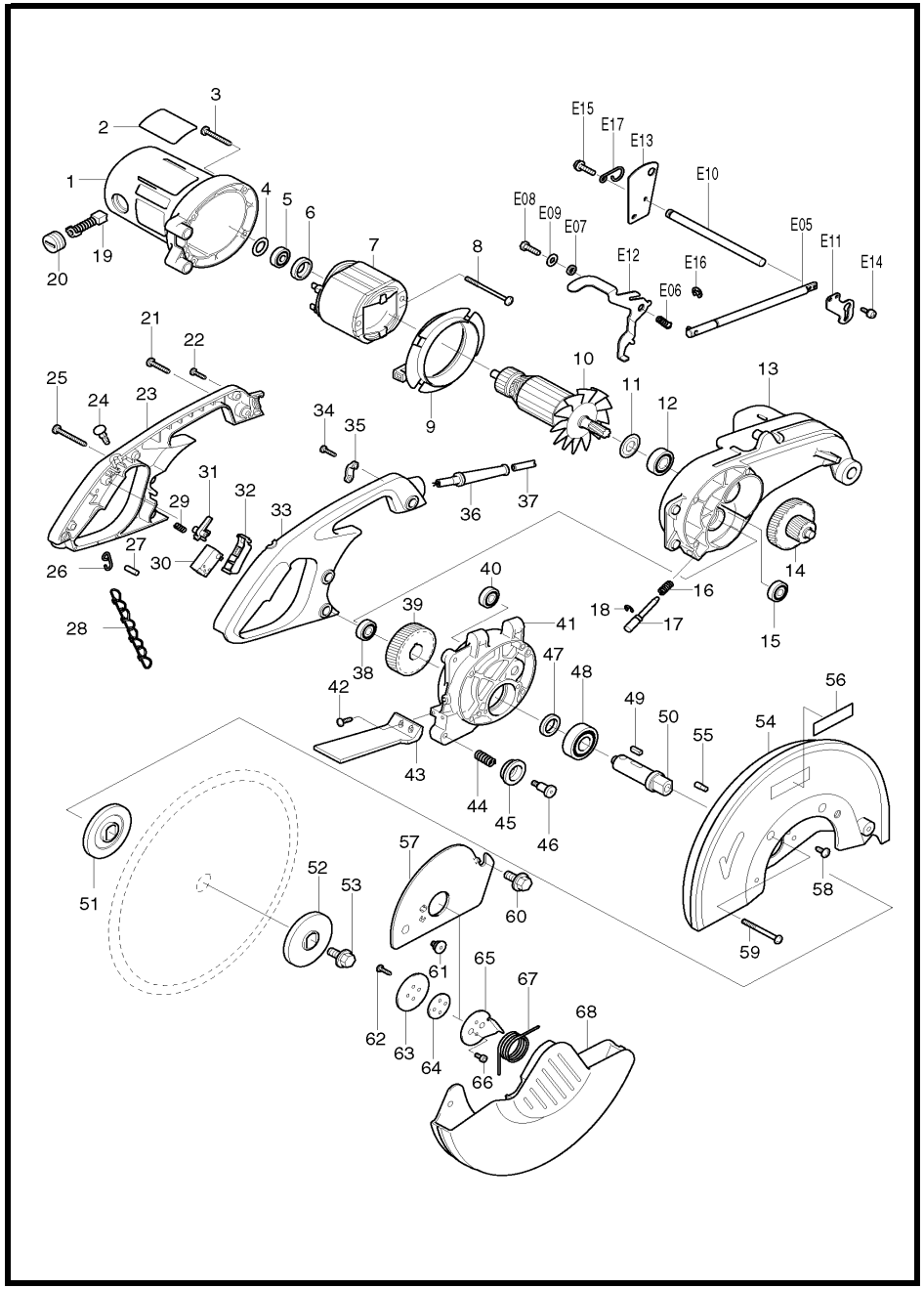

MODEL LC1230

ITEM	PARTS ID	DESCRIPTION	PRICE/BAHT	ITEM	PARTS ID	DESCRIPTION	PRICE/BAHT
001	151625-4	MOTOR HOUSING COMPLETE	2,790	055	256405-4	PIN 6-7	190
003	266028-0	TAPPING SCREW BIND CT 5X40	80	057	344737-2	CENTER COVER	560
004	253749-3	FLAT WASHER 16	80	058	266035-3	TAPPING SCREW BIND CT 5X12	50
005	210042-8	BALL BEARING 629LLB	250	059	911383-2	PAN HEAD SCREW M6X60	90
006	681633-6	INSULATION WASHER	150	060	265414-2	HEX. FLANGE HEAD BOLT M10X20	230
007	636168-2	FIELD 220V		061	265121-7	+ FLAT HEAD SCREW M6	90
008	266059-9	TAPPING SCREW 5X75	150	062	266034-5	TAPPING SCREW CT 4X16	50
009	415475-4	BAFFLE PLATE	190	063	344735-6	CENTER SUPPORT	150
010	516573-8	ARMATURE ASS'Y 220V		064	344734-8	CENTER WASHER	130
011	267714-6	WASHER 15	120	065	344736-4	CENTER PLATE	220
012	211206-7	BALL BEARING 6202LLB	460	066	922107-1	HEX. SOCKET HEAD BOLT M4X8	30
013	316626-1	GEAR HOUSING (L)	4,570	067	231643-9	TORSION SPRING 38	120
014	226122-0	GEAR COMPLETE 16-44	1,070	068	317152-3	SAFETY COVER	2,740
015	211064-1	BALL BEARING 6000	360	069	256098-7	PIN 5	100
016	231418-6	COMPRESSION SPRING 9	60	070	323882-6	COLLARED SHAFT 12	410
017	322678-2	SHAFT LOCK	350	071	253843-1	FLAT WASHER 12	120
018	961014-3	STOP RING E-8	30	072	911103-4	PAN HEAD SCREW M4X6	30
019	B-80341	CARBON BRUSH SET CB-203A		073	816128-2	POINTER	100
020	643700-5	BRUSH HOLDER CAP 7-18	110	074	310086-9	VISE	3,110
021	266032-9	TAPPING SCREW BIND CT 5X30	90	075	256453-3	PIN 12	170
022	265995-6	TAPPING SCREW 4X18	40	076	233103-7	COMPRESSION SPRING 45	650
023	182628-7	HANDLE SET	1,290	077	165066-8	SPRING HOLDER	340
024	411478-6	SWITCH BUTTON	120	078	265412-6	HEX. BOLT M8X20	100
025	266033-7	TAPPING SCREW BIND CT 5X50	80	079	266034-5	TAPPING SCREW CT 4X16	50
026	281216-8	HANGER	70	080	232075-3	LEAF SPRING	140
027	256012-3	PIN 6	100	081	265413-4	HEX. BOLT M16	790
028	282016-9	CHAIN	130	082	253771-0	FLAT WASHER 16	80
029	231397-8	COMPRESSION SPRING 4	50	083	252044-8	HEX. NUT M16-24	190
030	651922-3	SWITCH TG71B	850	084	344740-3	DUST BOX	810
031	415366-9	SWITCH LOCK	100	085	421671-4	RUBBER PAD	210
032	152463-7	SWITCH LEVER COMPLETE	230	086	421670-6	CUSHION	130
033	182628-7	HANDLE SET	1,290	087	257222-5	RING 8	170
034	265995-6	TAPPING SCREW 4X18	40	088	253731-2	FLAT WASHER 8	70
035	687053-2	STRAIN RELIEF	70	089	268040-6	PIN 16	440
036	682505-8	CORD GUARD 10-90	150	090	344118-0	VICE PLATE	440
037	691015-4	POWER SUPPLY CORD 0.75-2-2.5	740	091	346633-0	LINK PLATE	540
038	211064-1	BALL BEARING 6000	360	092	267236-6	FLAT WASHER 8	90
039	226427-8	HELICAL GEAR 38	710	093	265089-7	+ PAN HEAD SCREW M6	150
040	211061-7	BALL BEARING 6000LLB	390	094	912212-2	COUNTERSUNK HEAD SCREW M5X12	30
041	317148-4	GEAR HOUSING R	2,540	095	344119-8	GUIDE PLATE	530
042	266034-5	TAPPING SCREW CT 4X16	50	096	344739-8	UNDER PLATE	560
043	416869-6	PROTECTOR	360	097	266026-4	TAPPING SCREW BIND CT 4X12	30
044	231226-5	COMPRESSION SPRING 11	80	098	286212-1	CAP 20	50
045	415474-6	BLADE GUIDE	210	099	151623-8	BASE COMPLETE	10,980
046	266030-3	SCREW M6	200	100	286236-7	CAP 16	120
047	257139-2	RING 20	210	101	961014-3	STOP RING E-8	30
048	211329-1	BALL BEARING 6204DDW	590	102	323883-4	LEVER ROD 10	370
049	254229-2	KEY 5	100	103	253024-7	FLAT WASHER 10	70
050	323828-2	SPINDLE	1,770	104	252161-4	HEX. NUT M10-17	230
051	224308-0	INNER FLANGE 69	960	105	151622-0	LEVER HOLDER COMPLETE	410
052	224379-7	OUTER FLANGE 69	860	106	941152-7	FLAT WASHER 6	50
053	265414-2	HEX. FLANGE HEAD BOLT M10X20	230	107	265381-1	HEX. BOLT M6X16	110
054	183089-4	BLADE CASE SET	2,680	108	951063-8	SPRING PIN 3-16	30

SERVICE DRAWING

MODEL NO. LC1230

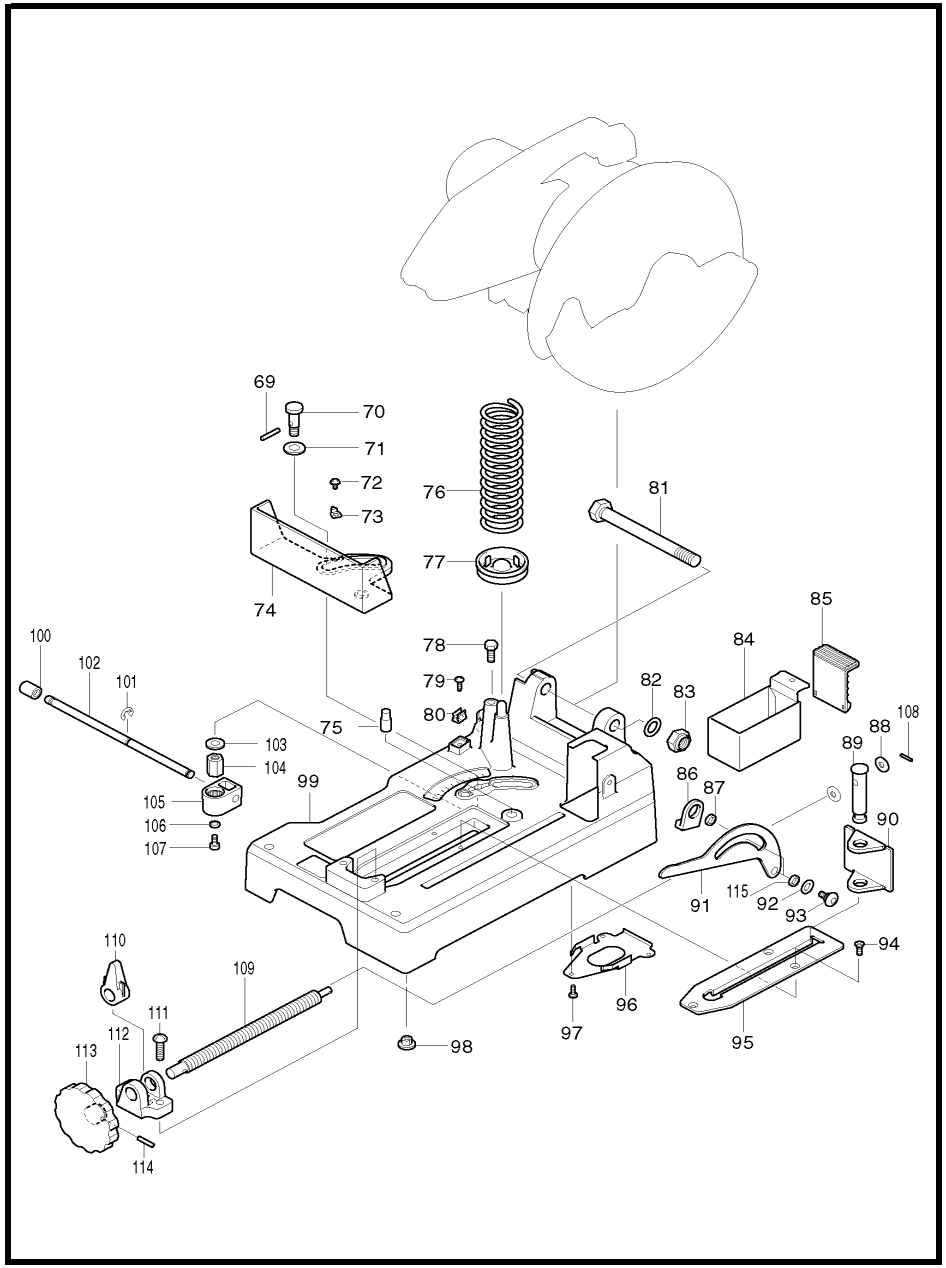

MODEL LC1230

ITEM	PARTS ID	DESCRIPTION	PRICE/BAHT
109	322679-0	VICE SCREW	1,190
110	322209-7	VICE NUT	540
111	911451-1	PAN HEAD SCREW M8X30	70
112	311949-2	SCREW GUIDE	680
113	271072-4	HANDLE 100	420
114	951166-8	SPRING PIN 5-24	50
115	257157-0	RING 8	120
A01	782210-8	SOCKET WRENCH 17	220
A02	192219-6	SAFETY GOGGLE	690
A03	A-87242	T.C.T.SAW BLADE 305X60TX25.4	7,130
A04	411478-6	SWITCH BUTTON	120

SERVICE DRAWING

MODEL NO. LF1000

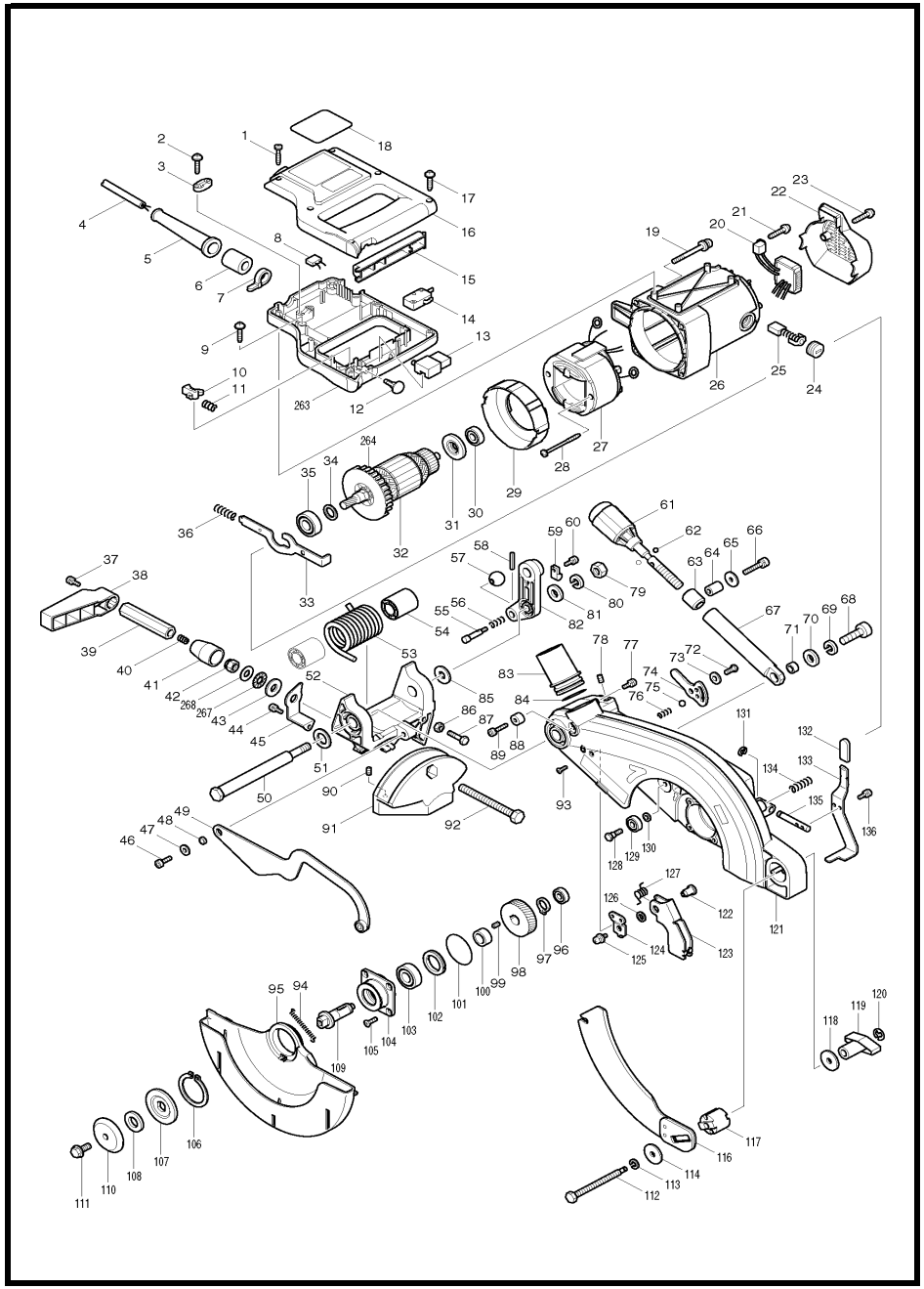

MODEL LF1000

ITEM	PARTS ID	DESCRIPTION	PRICE/BAHT	ITEM	PARTS ID	DESCRIPTION	PRICE/BAHT
001	265999-8	TAPPING SCREW 4X25	30	054	416358-1	SLEEVE 17	170
002	265995-6	TAPPING SCREW 4X18	40	055	256488-4	PIN 7	130
003	687054-0	STRAIN RELIEF	50	056	233429-7	COMPRESSION SPRING 7	40
004	662971-5	POWER SUPPLY CORD 1.0-6-1.56	1,130	057	271601-3	KNOB 20	90
005	682506-6	CORD GUARD 12-90	100	058	951063-8	SPRING PIN 3-16	30
006	688140-0	LINE FILTER	230	059	687049-3	STRAIN RELIEF	50
007	687010-0	BAND	30	060	911113-1	PAN HEAD SCREW M4X10	30
008	645006-7	NOISE SUPPRESSOR	170	061	271319-6	KNOB 40	380
009	265995-6	TAPPING SCREW 4X18	40	062	216030-3	STEEL BALL 6	40
010	416356-5	LOCK-OFF LEVER	170	063	257750-0	SLEEVE 13	260
011	233483-1	COMPRESSION SPRING 4	80	064	257748-7	SLEEVE 6	110
012	416404-0	SWITCH BUTTON	130	065	267313-4	FLAT WASHER 6	70
013	651923-1	SWITCH TG70B	850	066	265552-0	HEX. SOCKET HEAD BOLT M6X30	90
014	651941-9	SWITCH V-15-2A5	280	067	331689-6	ADJUST NUT	530
015	416357-3	SWITCH LEVER	230	068	922557-0	HEX. SOCKET HEAD BOLT M10X35	110
016	188063-7	HANDLE SET	1,320	069	942251-8	SPRING WASHER 10	50
017	265995-6	TAPPING SCREW 4X18	40	070	941252-3	FLAT WASHER 10	40
018	861365-3	LF1000 NAME PLATE		071	257747-9	SLEEVE 10	110
019	911383-2	PAN HEAD SCREW M6X60	90	072	265984-1	HEX.SOCKET BUTTON HEAD BOLT M6	140
020	631947-3	CONTROLLER	2,460	073	267326-5	FLAT WASHER 7	60
021	265995-6	TAPPING SCREW 4X18	40	074	345553-5	STOPPER PLATE	140
022	416362-0	REAR COVER	440	075	216004-4	STEEL BALL 7.9	50
023	265995-6	TAPPING SCREW 4X18	40	076	233466-1	COMPRESSION SPRING 6	80
024	643650-4	BRUSH HOLDER CAP 6.5-13.5	70	077	911113-1	PAN HEAD SCREW M4X10	30
025	B-80329	CARBON BRUSH SET CB-153A		078	266085-8	H.S.SET SCREW(FLAT POINT)M6X10	120
026	154569-7	MOTOR HOUSING COMPLETE	1,410	079	931502-4	HEX. NUT M10	60
027	596273-6	FIELD ASS'Y 220-240V		080	942251-8	SPRING WASHER 10	50
028	266044-2	TAPPING SCREW 5X60	130	081	941252-3	FLAT WASHER 10	40
029	416361-2	BAFFLE PLATE	160	082	317889-2	CONNECTING ROD	540
030	211061-7	BALL BEARING 6000LLB	390	083	419277-0	DUST NOZZLE	190
031	681642-5	INSULATION WASHER	570	084	213460-9	O RING 35	50
032	516748-9	ARMATURE ASS'Y 220-240V		085	253197-6	FLAT WASHER 10	120
033	345574-7	SHAFT LOCK	300	086	931302-2	HEX. NUT M6	70
034	267320-7	FLAT WASHER 15	80	087	921342-8	HEX. BOLT M6X25	60
035	211206-7	BALL BEARING 6202LLB	460	088	257746-1	SLEEVE 5	110
036	233467-9	COMPRESSION SPRING 9	80	089	265550-4	HEX. SOCKET HEAD BOLT M5X20	70
037	911113-1	PAN HEAD SCREW M4X10	30	090	266085-8	H.S.SET SCREW(FLAT POINT)M6X10	120
038	416006-2	LEVER 100	360	091	317887-6	SUB ARM	1,670
039	252192-3	HEX.NUT M10-17	140	092	266377-5	BOLT M10	190
040	231266-3	COMPRESSION SPRING 5	110	093	912112-6	COUNTERSUNK HEAD SCREW M4X10	30
041	331691-9	SPACER	240	094	231836-8	TENSION SPRING 4	110
042	264005-6	HEX. LOCK NUT M10-17	80	095	453711-0	SAFETY COVER	1,730
043	253197-6	FLAT WASHER 10	120	096	210043-6	BALL BEARING 608LLB	170
044	911113-1	PAN HEAD SCREW M4X10	30	097	961055-9	RETAINING RING S-15	50
045	816825-0	INDICATION PLATE	110	098	226600-0	HELICAL GEAR 46	610
046	265551-2	HEX. SOCKET HEAD BOLT M6X20	70	099	254202-2	KEY 4	90
047	267325-7	FLAT WASHER 6	70	100	257266-5	RING 15	110
048	257270-4	RING 6	60	101	213623-7	O RING 46	50
049	141540-0	LINK PLATE COMPLETE	1,300	102	285846-7	BEARING RETAINER 25-36	110
050	265532-6	HEX.BOLT M10	250	103	211206-7	BALL BEARING 6202LLB	460
051	267323-1	FLAT WASHER 16	40	104	317888-4	BEARING BOX	390
052	141133-3	ARM COMPLETE	2,910	105	912222-9	COUNTERSUNK HEAD SCREW M5X16	50
053	231681-1	TORSION SPRING 34	300	106	961201-4	RETAINING RING S-42	100

SERVICE DRAWING

MODEL NO. LF1000

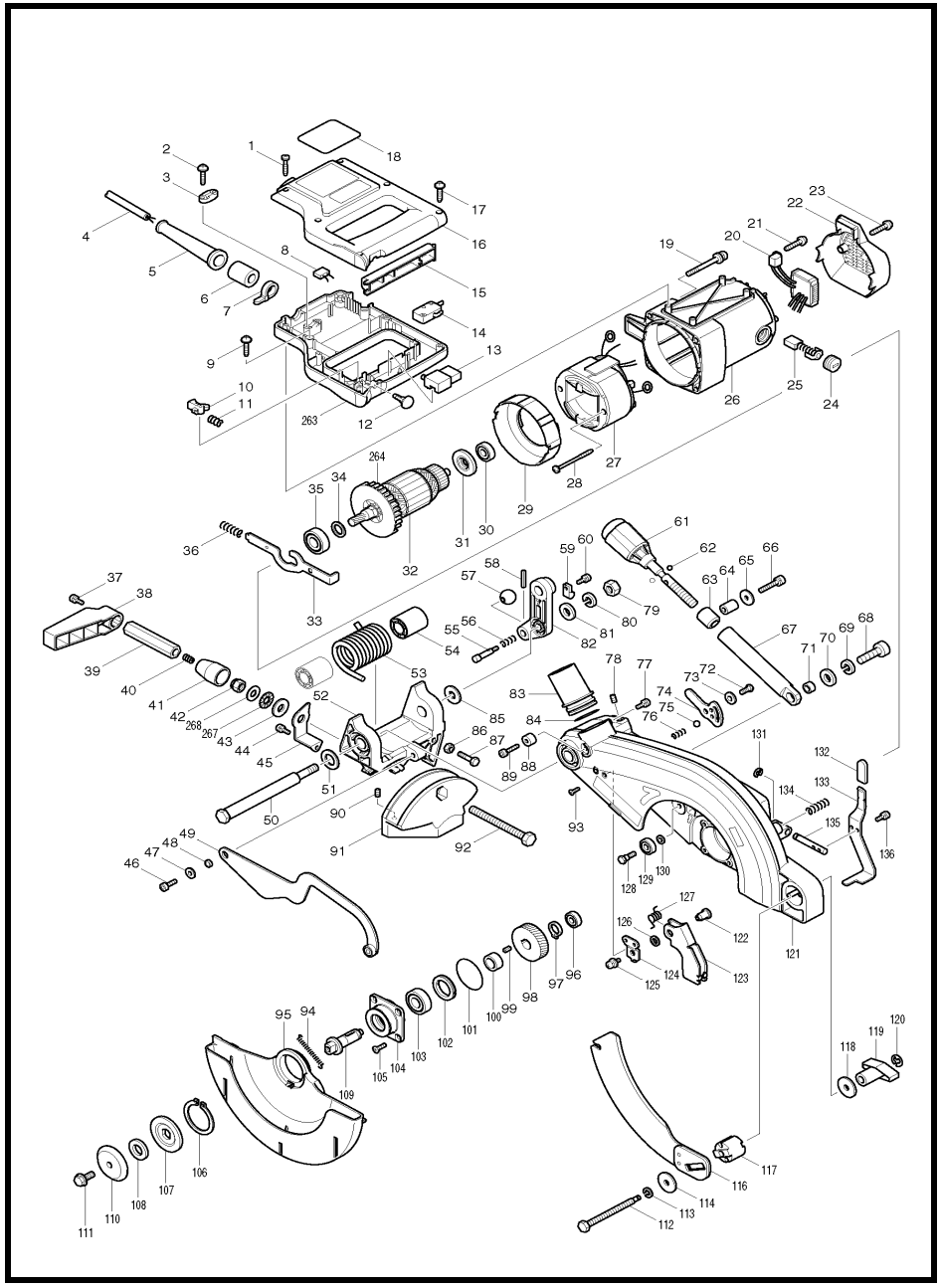

MODEL LF1000

ITEM	PARTS ID	DESCRIPTION	PRICE/BAHT	ITEM	PARTS ID	DESCRIPTION	PRICE/BAHT
107	224333-1	FLANGE 53	300	161	931302-2	HEX. NUT M6	70
108	257295-8	RING 16	150	162	418927-4	FOOT	230
109	324543-1	SPINDLE	480	163	154592-2	SUPPORT BRACKET COMPLETE	280
110	224400-2	OUTER FLANGE 53	420	164	921367-2	HEX. BOLT M6X45	60
111	266762-2	HEX. SOCKET HEAD BOLT M8X22	150	165	687049-3	STRAIN RELIEF	50
112	266763-0	HEX. SOCKET HEAD BOLT M8X97	150	166	911113-1	PAN HEAD SCREW M4X10	30
113	942201-3	SPRING WASHER 8	110	167	687049-3	STRAIN RELIEF	50
114	267312-6	FLAT WASHER 8	80	168	911113-1	PAN HEAD SCREW M4X10	30
116	163461-6	RIVING KNIFE	1,090	169	931502-4	HEX. NUT M10	60
117	331690-1	KNIFE SUPPORT	360	170	942251-8	SPRING WASHER 10	50
118	267312-6	FLAT WASHER 8	80	171	267328-1	FLAT WASHER 10	60
119	252641-0	WING NUT M8	160	172	265553-8	HEX. SOCKET HEAD BOLT M8X20	80
120	961011-9	STOP RING E-4	20	173	331686-2	SQUARE PIPE 32-475	1,700
121	154571-0	BLADE CASE COMPLETE	3,220	174	267321-5	FLAT WASHER 8	90
122	324664-9	GUARD SHAFT	110	175	961012-7	STOP RING E-6	20
123	345554-3	GUARD	210	176	257749-5	SLEEVE 8	360
124	345558-5	GUARD HOLDER	180	177	961012-7	STOP RING E-6	20
125	911213-7	PAN HEAD SCREW M5X12	40	178	961012-7	STOP RING E-6	20
126	267327-3	FLAT WASHER 10	110	179	267321-5	FLAT WASHER 8	90
127	231675-6	TORSION SPRING 11	50	180	345543-8	BRACKET	1,710
128	265533-4	HEX.BOLT M6	110	181	267321-5	FLAT WASHER 8	90
129	210043-6	BALL BEARING 608LLB	170	182	268127-4	PIN 8	150
130	267313-4	FLAT WASHER 6	70	183	345548-8	STOPPER HOOK	130
131	961012-7	STOP RING E-6	20	185	268127-4	PIN 8	150
132	421589-9	CAP	100	186	267321-5	FLAT WASHER 8	90
133	345552-7	LOCK LEVER	160	187	268141-0	PIN 8	130
134	233467-9	COMPRESSION SPRING 9	80	188	267312-6	FLAT WASHER 8	80
135	256855-3	ROD 8	190	189	931302-2	HEX. NUT M6	70
136	911113-1	PAN HEAD SCREW M4X10	30	190	418925-8	FOOT BOLT	450
137	912112-6	COUNTERSUNK HEAD SCREW M4X10	30	191	233468-7	COMPRESSION SPRING 13	120
138	912112-6	COUNTERSUNK HEAD SCREW M4X10	30	192	418926-6	FOOT NUT	260
139	345541-2	SLIDE PLATE L	670	193	265995-6	TAPPING SCREW 4X18	40
140	345542-0	SLIDE PLATE R	1,120	194	687209-7	BAND	110
141	265551-2	HEX. SOCKET HEAD BOLT M6X20	70	195	682505-8	CORD GUARD 10-90	150
142	141631-7	TURN TABLE COMPLETE	6,590	196	652772-9	RELAY 305.232.01	2,970
143	251815-0	SCREW M6X25	130	197	418924-0	SWITCH BOX COVER	560
144	268068-4	PIN 5	100	198	911148-2	PAN HEAD SCREW M4X25	70
145	154578-6	SUB FENCE R COMPLETE	700	199	654561-8	TERMINAL BLOCK	260
146	911258-5	PAN HEAD SCREW M5X35	30	200	645206-9	NOISE SUPPRESSOR	360
147	911113-1	PAN HEAD SCREW M4X10	30	201	686035-1	RECEPTACLE SLEEVE	50
148	816827-6	SCALE PLATE R	190	202	418618-7	PIN	80
149	816826-8	SCALE PLATE L	190	203	233464-5	COMPRESSION SPRING 8	80
150	911113-1	PAN HEAD SCREW M4X10	30	204	443103-1	FELT RING 6	50
151	911258-5	PAN HEAD SCREW M5X35	30	205	267322-3	FLAT WASHER 7	60
152	154577-8	SUB FENCE L COMPLETE	660	206	418617-9	SWITCH BUTTON OFF	110
153	141586-6	GUIDE FENCE COMPLETE	4,020	207	418616-1	SWITCH BUTTON ON	110
154	266392-9	H.S.SET SCREW(FLATPOINT)M10X12	90	208	267322-3	FLAT WASHER 7	60
155	233466-1	COMPRESSION SPRING 6	80	209	443103-1	FELT RING 6	50
156	216004-4	STEEL BALL 7.9	50	210	233464-5	COMPRESSION SPRING 8	80
157	265710-8	THUMB SCREW M6X33	150	211	418618-7	PIN	80
158	188862-7	FRAME SET	10,130	212	418929-0	SWITCH COVER	80
159	345547-0	HOOK	90	213	231682-9	TORSION SPRING 5	40
160	331687-0	SQUARE PIPE 32-510	690	214	331686-2	SQUARE PIPE 32-475	1,700

SERVICE DRAWING

MODEL NO. LF1000

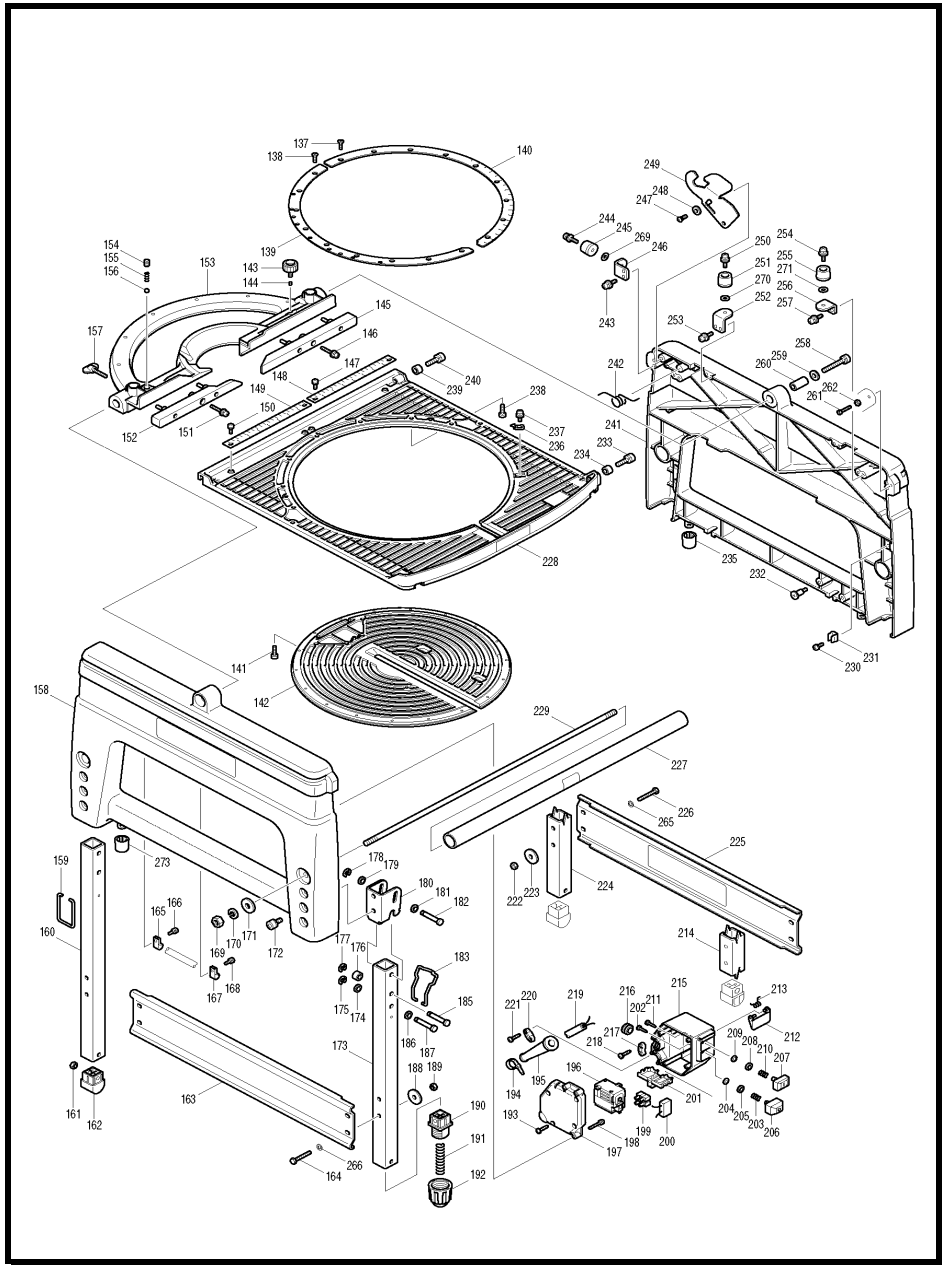

MODEL LF1000

ITEM	PARTS ID	DESCRIPTION	PRICE/BAHT
215	418923-2	SWITCH BOX	870
216	682511-3	GROMMET	80
217	687054-0	STRAIN RELIEF	50
218	265995-6	TAPPING SCREW 4X18	40
219	691015-4	POWER SUPPLY CORD 0.75-2-2.5	740
220	687053-2	STRAIN RELIEF	70
221	265995-6	TAPPING SCREW 4X18	40
222	931302-2	HEX. NUT M6	70
223	267312-6	FLAT WASHER 8	80
224	331686-2	SQUARE PIPE 32-475	1,700
225	345546-2	SUPPORT BRACKET	720
226	921367-2	HEX. BOLT M6X45	60
227	154593-0	PIPE 32 COMPLETE	920
228	154572-8	TABLE COMPLETE	13,770
229	266360-2	SCREW M10	460
230	911113-1	PAN HEAD SCREW M4X10	30
231	410047-0	WRENCH HOLDER 5.6	100
232	266391-1	SHOULDER SCREW M6	110
233	265554-6	HEX. SOCKET HEAD BOLT M8X25	80
234	257749-5	SLEEVE 8	360
235	418931-3	CAP	150
236	816856-9	INDICATION PLATE	110
237	911108-4	PAN HEAD SCREW M4X8	20
238	265551-2	HEX. SOCKET HEAD BOLT M6X20	70
239	257749-5	SLEEVE 8	360
240	265554-6	HEX. SOCKET HEAD BOLT M8X25	80
241	188862-7	FRAME SET	10,130
242	231680-3	TORSION SPRING 17	110
243	911333-7	PAN HEAD SCREW M6X20	50
244	911333-7	PAN HEAD SCREW M6X20	50
245	421906-3	CUSHION	80
246	345550-1	STOPPER BRACKET R	720
247	265984-1	HEX.SOCKET BUTTON HEAD BOLT M6	140
248	267326-5	FLAT WASHER 7	60
249	345551-9	LEVER	500
250	911333-7	PAN HEAD SCREW M6X20	50
251	421906-3	CUSHION	80
252	345550-1	STOPPER BRACKET R	720
253	911333-7	PAN HEAD SCREW M6X20	50
254	911333-7	PAN HEAD SCREW M6X20	50
255	421906-3	CUSHION	80
256	345549-6	STOPPER BRACKET F	230
257	911333-7	PAN HEAD SCREW M6X20	50
258	265555-4	HEX. SOCKET HEAD BOLT M8X50	110
259	267399-8	FLAT WASHER 8	60
260	257751-8	SLEEVE 8	190
261	265549-9	HEX. SOCKET HEAD BOLT M4X20	70
262	931103-8	HEX. NUT M4	
263	188063-7	HANDLE SET	1,320
264	240003-4	FAN 80	260
265	941152-7	FLAT WASHER 6	50

ITEM	PARTS ID	DESCRIPTION	PRICE/BAHT
268	253024-7	FLAT WASHER 10	70
269	267319-2	FLAT WASHER 6	60
271	267319-2	FLAT WASHER 6	60
272	267319-2	FLAT WASHER 6	60
273	418931-3	CAP	150
A01	122729-9	RULER ASS'Y	2,730
A02	122732-0	DUST COVER ASS'Y	1,940
A03	122523-9	DUST BAG ASS'Y	570
A04	122728-1	VISE ASS'Y	1,440
A05	122730-4	ANGLE RULE ASS'Y	1,340
A06	123104-2	TOP COVER ASS'Y	2,660
A07	345555-1	FIX PLATE	310
A08	416368-8	ELBOW	210
A09	419043-5	PUSH STICK	290
A10	762001-3	TRIANGULAR RULE	120
A11	921322-4	HEX. BOLT M6X16	50
A12	783204-6	HEX. WRENCH 6	110
A14	B-03838	T.C.T.SAW BLADE 260X30X60T	
A15	154580-9	RULE HOLDER COMPLETE	1,430
A16	257060-5	RING 15.8	140
A17	783201-2	HEX. WRENCH 3	50

SERVICE DRAWING

MODEL NO. LS1016

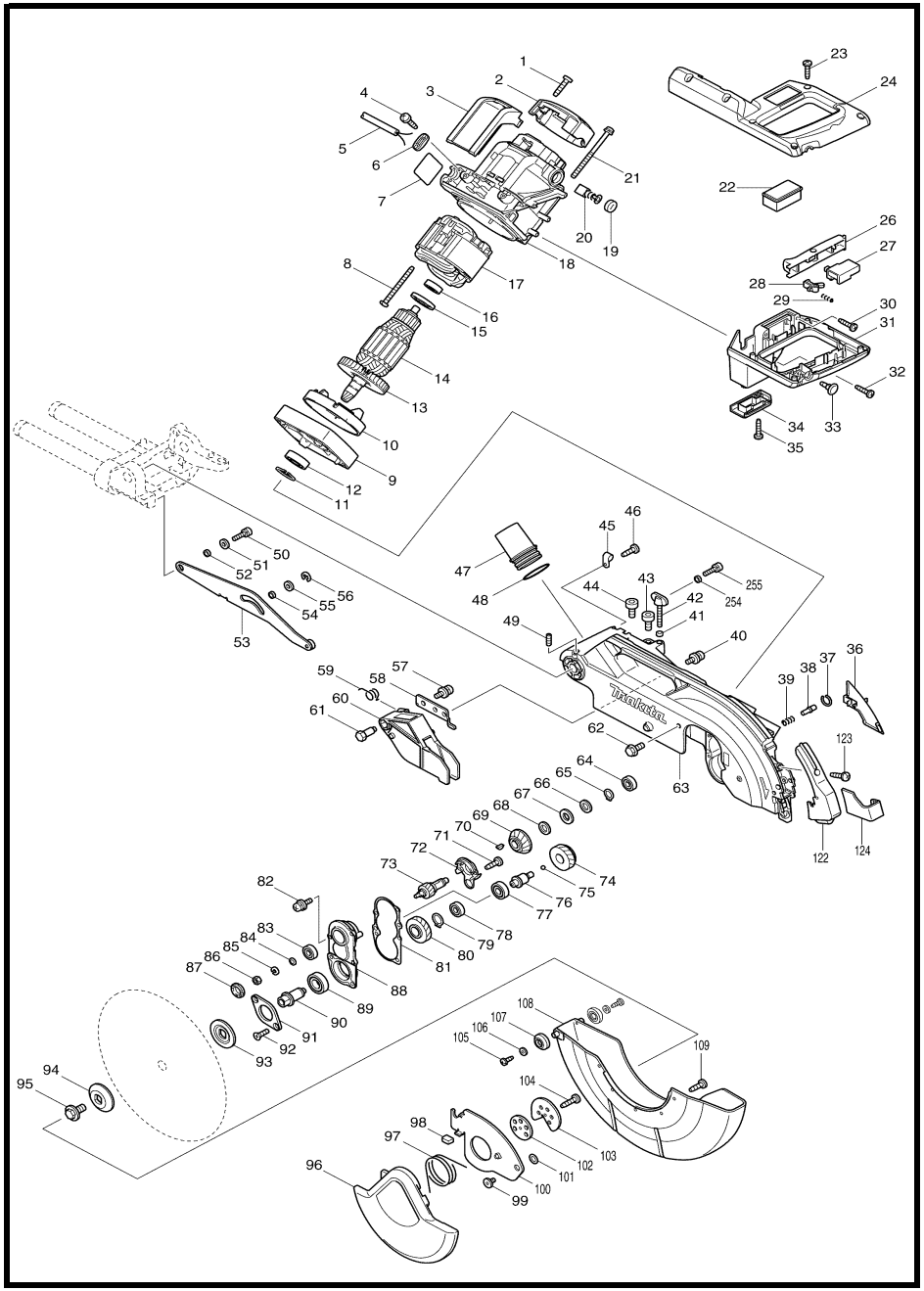

MODEL LS1016

ITEM	PARTS ID	DESCRIPTION	PRICE/BAHT	ITEM	PARTS ID	DESCRIPTION	PRICE/BAHT
001	265995-6	TAPPING SCREW 4X18	40	057	911113-1	PAN HEAD SCREW M4X10	30
002	450999-3	REAR COVER	190	058	346050-4	GUARD HOLDER	90
003	631865-5	CONTROLLER	1,760	059	231675-6	TORSION SPRING 11	50
004	265995-6	TAPPING SCREW 4X18	40	060	453634-2	GUARD	250
005	691015-4	POWER SUPPLY CORD 0.75-2-2.5	740	061	325645-6	GUARD SHAFT	110
006	687140-7	STRAIN RELIEF	40	062	265324-3	HEX. FLANGE HEAD BOLT M8X12	140
007	866468-8	LS1016 NAME PLATE	110	063	140055-4	BLADE CASE COMPLETE	7,040
008	266418-7	TAPPING SCREW 5X55	40	064	210005-4	BALL BEARING 608DDW	240
009	318399-2	MOTOR BRACKET	530	065	961052-5	RETAINING RING S-12	40
010	451001-5	BAFFLE PLATE	110	066	253744-3	FLAT WASHER 12	50
011	961057-5	RETAINING RING S-17	40	067	261104-5	RUBBER WASHER 12	50
012	210301-0	BALL BEARING 6003DDW	600	068	253744-3	FLAT WASHER 12	50
014	510144-3	ARMATURE ASS'Y 220V		069	227550-2	SPIRAL BEVEL GEAR 32	410
015	681642-5	INSULATION WASHER	570	070	254001-2	WOODRUFF KEY 4	80
016	210067-2	BALL BEARING 6000ZZ	150	071	266026-4	TAPPING SCREW BIND CT 4X12	30
017	590022-3	FIELD ASS'Y 220V		072	451002-3	GREASE HOLDER	90
018	140083-9	MOTOR HOUSING COMPLETE	860	073	227701-7	HELICAL GEAR 14	360
020	B-80329	CARBON BRUSH SET CB-153A		074	227702-5	HERICAL GEAR 27	380
021	911948-0	PAN HEAD SCREW M6X80 WITH WR	90	075	216024-8	STEEL BALL 4	20
022	451015-4	COVER	110	076	325643-0	GEAR SHAFT	250
023	265995-6	TAPPING SCREW 4X18	40	077	210067-2	BALL BEARING 6000ZZ	150
024	450998-5	HANDLE COVER	360	078	210005-4	BALL BEARING 608DDW	240
026	451003-1	SWITCH LEVER	130	079	961055-9	RETAINING RING S-15	50
027	650618-3	SWITCH TG72B-1	590	080	227703-3	HERICAL GEAR 28	360
028	416356-5	LOCK-OFF LEVER	170	081	442147-8	GASKET	110
029	231026-3	COMPRESSION SPRING 4	70	082	911223-4	PAN HEAD SCREW M5X16	40
030	265995-6	TAPPING SCREW 4X18	40	083	210005-4	BALL BEARING 608DDW	240
031	140049-9	HANDLE COMPLETE	390	084	267010-2	FLAT WASHER 5	80
032	265995-6	TAPPING SCREW 4X18	40	085	942101-7	SPRING WASHER 5	100
033	451037-4	SWITCH BUTTON	90	086	931202-6	HEX. NUT M5	70
034	451017-0	COVER HOLDER	90	087	285847-5	BEARING RETAINER 14-23	290
035	265995-6	TAPPING SCREW 4X18	40	088	158957-0	BEARING BOX COMPLETE	440
036	451004-9	LEAD COVER	90	089	211236-8	BALL BEARING 6002DDW	550
037	231928-3	RING SPRING 8	40	090	325644-8	SPINDLE	310
038	256633-1	PIN 6	110	091	285732-2	BEARING RETAINER 51	90
039	231240-1	COMPRESSION SPRING 7	20	092	265034-2	+ COUNTERSUNK HEAD SCREW M5X1	60
040	911113-1	PAN HEAD SCREW M4X10	30	093	224428-0	INNER FLANGE 46	250
041	262001-8	URETHANE RING 5	150	094	224429-8	OUTER FLANGE 46	290
042	265717-4	SCREW M6X43	180	095	265405-3	HEX. FRANGE HEAD BOLT M10X20	190
043	266488-6	HEX SOCKET HEAD BOLT M8X20	90	096	158959-6	SAFETY COVER A COMPLETE	610
044	922332-4	HEX. SOCKET HEAD BOLT M6X20	50	097	231634-0	TORSION SPRING 45	210
045	687042-7	STRAIN RELIEF	80	098	424190-9	CUSHION	50
046	266026-4	TAPPING SCREW BIND CT 4X12	30	099	265985-9	HEX.SOCKET HEAD BOLT M6	150
047	419277-0	DUST NOZZLE	190	100	346048-1	CENTER COVER	290
048	213460-9	O RING 35	50	101	253932-2	WAVE WASHER 10	30
049	266321-2	H.S.SET SCREW(FLAT POINT)M6X16	50	102	344539-6	CENTER WASHER	210
050	922331-6	HEX. SOCKET HEAD BOLT M6X20	90	103	346047-3	CENTER PLATE	130
051	253804-1	FLAT WASHER 6	40	104	266034-5	TAPPING SCREW CT 4X16	50
052	257163-5	RING 6	140	105	266020-6	TAPPING SCREW 4X12	50
053	158960-1	LINK PLATE COMPLETE	460	106	941051-3	FLAT WASHER 4	20
054	257163-5	RING 6	140	107	424193-3	ROLLER	90
055	253804-1	FLAT WASHER 6	40	108	451754-6	SAFETY COVER B	990
056	961018-5	STOP RING E-5	50	109	266026-4	TAPPING SCREW BIND CT 4X12	30

SERVICE DRAWING

MODEL NO. LS1016

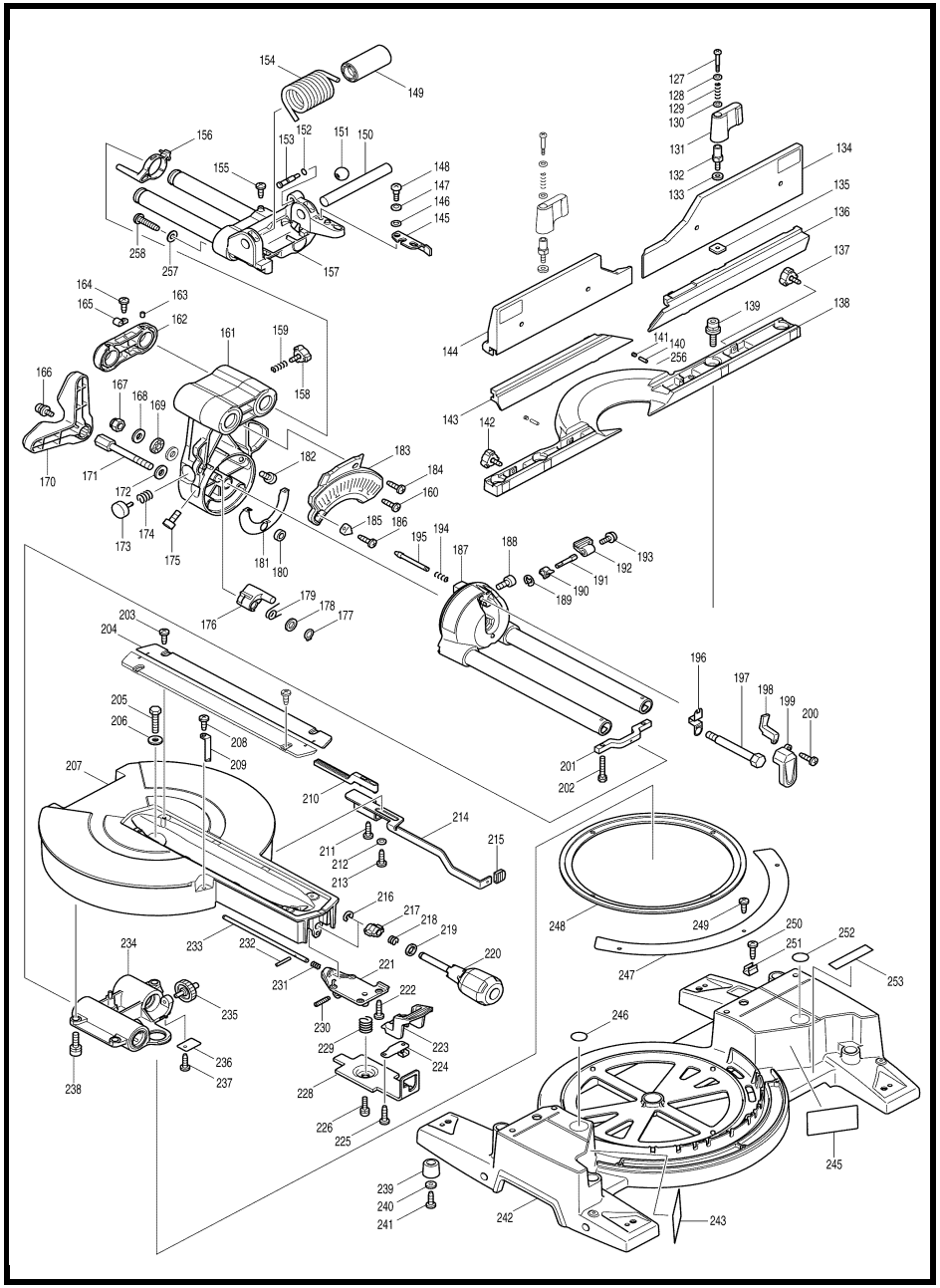

MODEL LS1016

ITEM	PARTS ID	DESCRIPTION	PRICE/BAHT	ITEM	PARTS ID	DESCRIPTION	PRICE/BAHT
122	451016-2	BLADE CASE COVER	160	177	961052-5	RETAINING RING S-12	40
123	266034-5	TAPPING SCREW CT 4X16	50	178	253744-3	FLAT WASHER 12	50
124	451038-2	PROTECTOR	90	179	231646-3	TORSION SPRING 14	100
127	265026-1	+ PAN HEAD SCREW M4	170	180	262158-5	RUBBER RING 9	50
128	941102-2	FLAT WASHER 5	30	181	346071-6	PLATE	110
129	233267-7	COMPRESSION SPRING 7	100	182	266488-6	HEX SOCKET HEAD BOLT M8X20	90
130	941102-2	FLAT WASHER 5	30	183	451008-1	ARM COVER	250
131	272261-4	LEVER 45	110	184	266034-5	TAPPING SCREW CT 4X16	50
132	325651-1	JOINT	160	185	343678-9	POINTER	130
133	253804-1	FLAT WASHER 6	40	186	266034-5	TAPPING SCREW CT 4X16	50
134	140070-8	UPPER FENCE R COMPLETE	1,650	187	158964-3	ARM HOLDER COMPLETE	2,370
135	346058-8	GUIDE PLATE	90	188	266488-6	HEX SOCKET HEAD BOLT M8X20	90
136	318596-0	LOWER FENCE R	1,050	189	961011-9	STOP RING E-4	20
137	265783-1	THUMB SCREW M6X18	90	190	451044-7	CAM	50
138	318411-8	GUIDE FENCE	2,090	191	325656-1	ROD 6	110
139	922443-5	H.S.H.BOLT M8X25 WITH WR	90	192	272262-2	LEVER 22	90
140	256226-4	PIN 4	50	193	911113-1	PAN HEAD SCREW M4X10	30
141	266264-8	H.S.SET SCREW(FLAT POINT)M5X6	80	194	234122-6	COMPRESSION SPRING 6	50
142	265783-1	THUMB SCREW M6X18	90	195	325865-2	LOCK PIN 8	110
143	318595-2	LOWER FENCE L	1,090	195	325865-2	LOCK PIN 8	110
144	140069-3	UPPER FENCE L COMPLETE	1,280	196	232250-1	LEAF SPRING	90
145	346049-9	STOPPER ARM	150	197	325646-4	CENTER SHAFT	180
146	253948-7	WAVE WASHER 8	60	198	451039-0	POSITION PLATE	130
147	253835-0	FLAT WASHER 8	60	199	451070-6	ARM HOLDER COVER	90
148	251267-5	+ PAN HEAD SCREW M6	90	200	266034-5	TAPPING SCREW CT 4X16	50
149	451036-6	SLEEVE 17	150	201	158967-7	SQUARE ROD COMPLETE	230
150	323740-6	ROD 16	290	202	925251-3	HEX.BOLT M5X30	60
151	271601-3	KNOB 20	90	203	266026-4	TAPPING SCREW BIND CT 4X12	30
152	213021-5	O RING 5	20	204	451013-8	KURF BOARD	200
153	324183-5	STOPPER PIN	130	205	265585-5	HEX BOLT M8X45	90
154	233537-4	TORSION SPRING 35	390	206	253762-1	FLAT WASHER 8	130
155	266026-4	TAPPING SCREW BIND CT 4X12	30	207	140142-9	TURN BASE COMPLETE	4,410
156	158962-7	STOPPER LEVER COMPETE	90	208	266026-4	TAPPING SCREW BIND CT 4X12	30
157	158961-9	FRONT ARM COMPLETE	2,260	209	451009-9	INDICATION PLATE	50
158	265783-1	THUMB SCREW M6X18	90	210	451011-2	RACK BLOCK	110
159	231240-1	COMPRESSION SPRING 7	20	211	266385-6	TAPPING SCREW 4X14	70
160	266034-5	TAPPING SCREW CT 4X16	50	212	941051-3	FLAT WASHER 4	20
161	158963-5	ARM COMPLETE	5,010	213	266026-4	TAPPING SCREW BIND CT 4X12	30
162	318403-7	HOLDER	570	214	346052-0	SLIDE LOCK PLATE	380
163	266208-8	H.S.SET SCREW(CUP POINT)M6X8	110	215	286275-7	CAP	50
164	266026-4	TAPPING SCREW BIND CT 4X12	30	216	961013-5	STOP RING E-7	20
165	687042-7	STRAIN RELIEF	80	217	313165-2	CAM	250
166	911113-1	PAN HEAD SCREW M4X10	30	218	231131-6	COMPRESSION SPRING 11	30
167	252130-5	HEX. LOCK NUT M10-17	140	219	267047-9	FLAT WASHER 10	50
168	253024-7	FLAT WASHER 10	70	220	273666-1	GRIP 50	310
169	216413-7	THRUST NEEDLE CAGE 1024	180	221	318410-0	PIN HOLDER	330
170	451019-6	LEVER 105	200	222	266034-5	TAPPING SCREW CT 4X16	50
171	265589-7	HEX BOLT M10	230	223	451010-4	LOCK LEVER	150
172	253024-7	FLAT WASHER 10	70	224	345272-3	LOCK LEVER PLATE	160
173	415208-7	RELEASE BUTTON	170	225	266034-5	TAPPING SCREW CT 4X16	50
174	233031-6	COMPRESSION SPRING 12	110	226	266505-2	H.S. BINDING HEAD SCREW M6X14	90
175	266488-6	HEX SOCKET HEAD BOLT M8X20	90	228	346051-2	MITER LOCK PLATE	540
176	318405-3	STOPPER	230	229	234104-8	COMPRESSION SPRING 13	50

SERVICE DRAWING

MODEL NO. LS1016

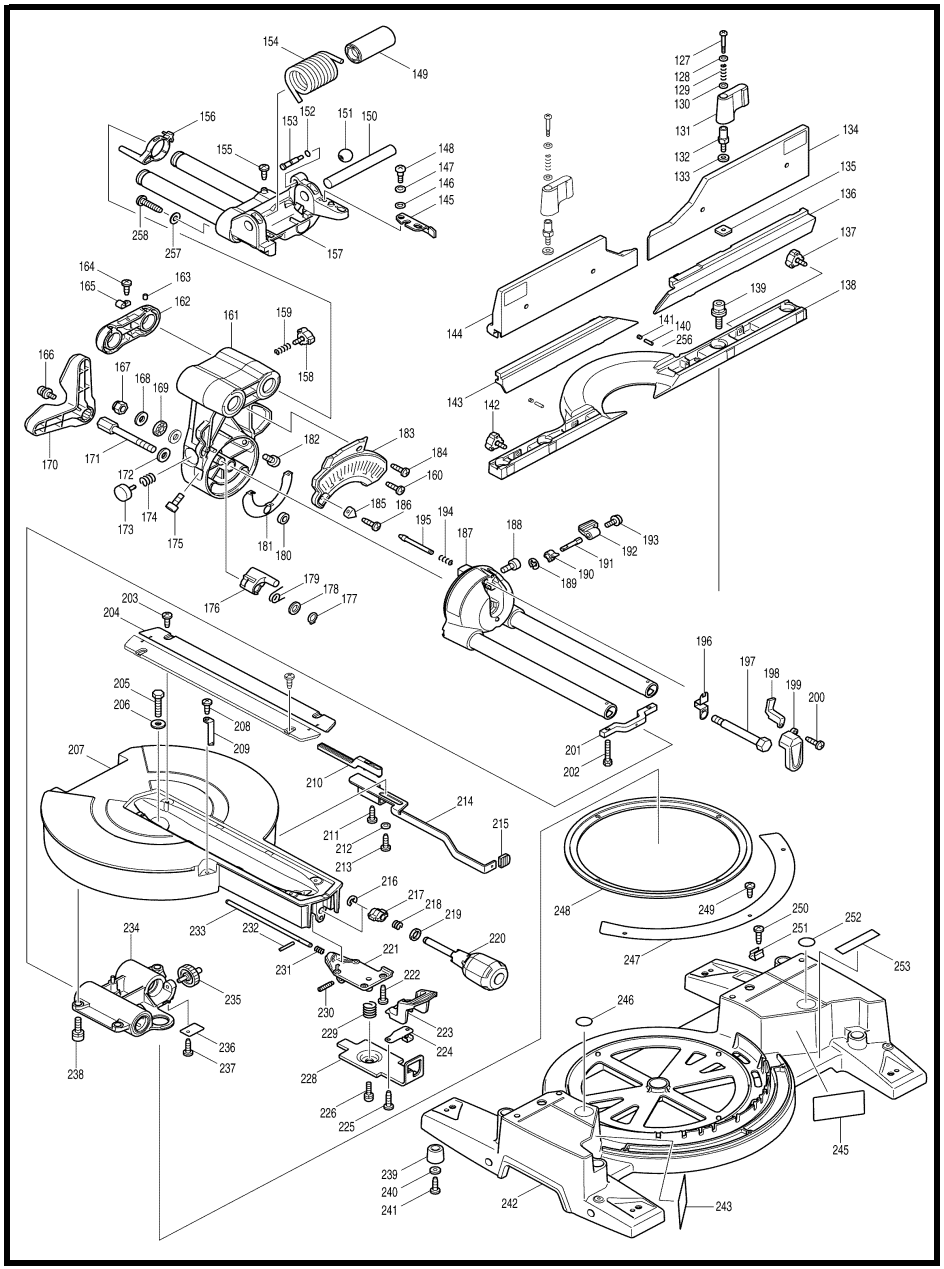

MODEL LS1016

ITEM	PARTS ID	DESCRIPTION	PRICE/BAHT
230	266306-8	SHOULDER SCREW M5	160
231	231325-3	COMPRESSION SPRING 6	100
232	256158-5	PIN 3	100
233	325649-8	LOCK PIN 6	150
234	158968-5	LINEAR BEARING BOX COMPLETE	3,630
235	451018-8	SPUR GEAR 43	190
236	232249-6	LEAF SPRING	50
237	266026-4	TAPPING SCREW BIND CT 4X12	30
238	922441-9	HEX. SOCKET HEAD BOLT M8X25	100
239	421845-7	FOOT	90
240	267195-4	FLAT WASHER 4	120
241	266026-4	TAPPING SCREW BIND CT 4X12	30
242	140054-6	BASE COMPLETE	5,460
243	810495-7	CAUTION LABEL	50
246	817283-3	CAUTION LABEL	120
247	816920-6	MITER SCALE PLATE	270
248	451012-0	SLIDE PLATE	150
249	266026-4	TAPPING SCREW BIND CT 4X12	30
250	266034-5	TAPPING SCREW CT 4X16	50
251	232075-3	LEAF SPRING	140
252	817283-3	CAUTION LABEL	120
254	257785-1	SLEEVE 6	90
255	922226-3	HEX. SOCKET HEAD BOLT M5X18	80
256	216024-8	STEEL BALL 4	20
257	253874-0	FLAT WASHER 4	60
258	266042-6	TAPPING SCREW BIND CT 4X20	50
271	942151-2	SPRING WASHER 6	100
A01	122852-0	DUST BAG ASS'Y	310
A02	122854-6	VISE ASS'Y	1,290
A03	762001-3	TRIANGULAR RULE	120
A04	265786-5	SCREW M5X16	90
A05	325673-1	HOLDER 200	270
A06	782232-8	BOX WRENCH 13	360
E01	257060-5	RING 15.8	140
E02	651941-9	SWITCH V-15-2A5	280

SERVICE DRAWING

MODEL NO. LS1017L

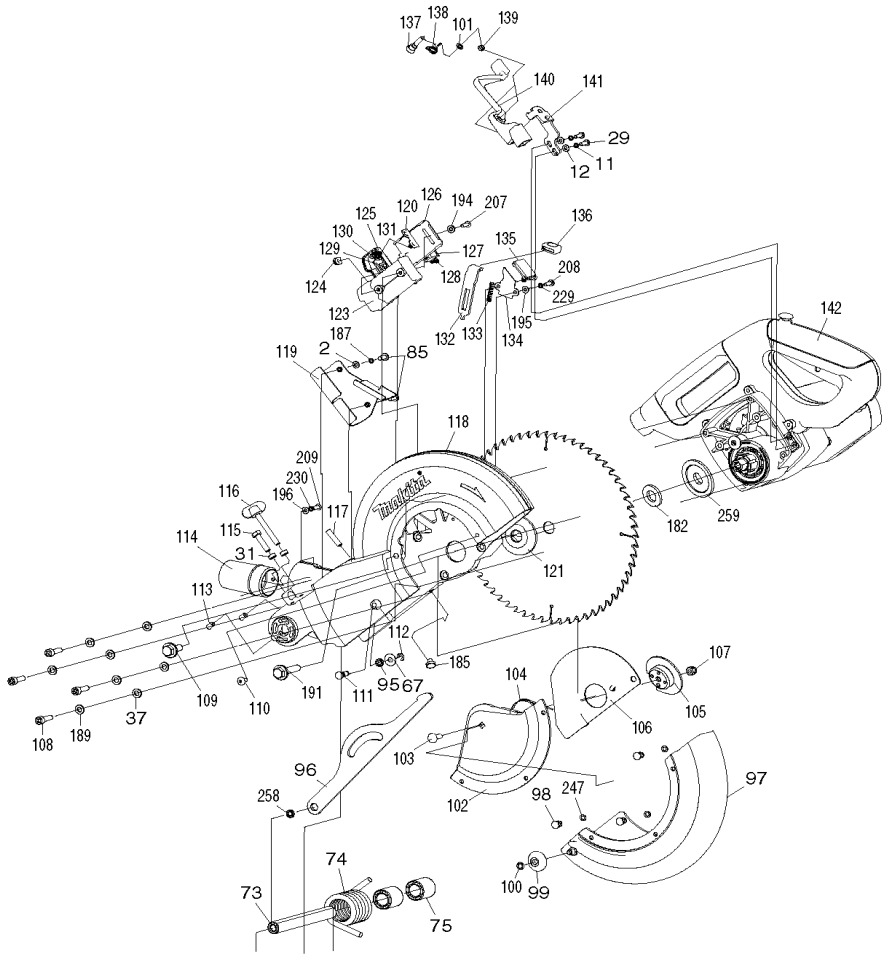

MODEL LS1017L

ITEM	PARTS ID	DESCRIPTION	PRICE/BAHT	ITEM	PARTS ID	DESCRIPTION	PRICE/BAHT
001	JM23100006	CROSS HEAD SCREW M5X20	70	058	JM23100062	HEX BOLT M8X30	110
002	JM23100007	FLAT WASHER 5	40	059	JM23100063	KEY	150
003	JM23100008	PAD	110	060	JM23100320	SUB FENCE COMPLETE	440
004	JM23100009	LOCKNUT M10	90	061	JM23100065	CROSS HEAD SCREW M4X8	40
005	JM23100010	FLAT WASHER 10	40	062	JM23100066	WING KNOB M6X20	110
006	JM23100300	BASE COMPLETE INC. 7	4,420	063	JM23100067	H.S.BOLT M4X12	70
007	JM23100012	MITER SCALE LABEL	130	064	JM23100068	LASER MOVING FIX PLATE	70
009	JM23100013	KNOB FOR EXT.WING	120	065	JM23100069	LASER CORD CLAMP	40
010	JM23100014	CROSS HEAD SCREW M4X15	70	066	JM23100070	LASER	530
013	JM23100017	FRICTION PLATE	120	067	JM23100071	THIN FLAT WASHER 6	40
014	JM23100018	LOCK PLATE A	160	068	JM23100072	CORD CLAMP	90
015	JM23100019	CROSS HEAD SCREW M4X18	70	069	JM23100073	CORD WRAP BRACKET	150
016	JM23100020	LOCK PLATE B	160	070	JM23100342	UP BLADE GUARD BRACKET CMPLT	4,700
017	JM23100021	LOCK SPRING	120	071	JM23100075	LASER BASE	170
018	JM23100022	LOCK PIN	130	072	JM23100076	H.S.SCREW M4X10	70
019	JM23100023	PRESS PLATE	130	073	JM23100077	CONNECTION SHAFT	180
020	JM23100024	LOCK SHAFT B	150	074	JM23100078	TORSION SPRING	380
021	JM23100025	WORKING TABLE LOCKING BRACKET	180	075	JM23100079	LOCATION TUBE	120
022	JM23100026	LOCK SHAFT A	110	076	JM23100080	SLIDING BAR	1,570
023	JM23100027	MITER LOCKING HANDLE	180	077	JM23100081	BUFFER	180
024	JM23100310	WORKING TABLE COMPLETE INC. 32,34,35	4,850	078	JM23100082	BEARING BAFFLE	180
025	JM23100029	TABLE INSERT	150	079	JM23100083	LIMITED BRACKET	110
026	JM23100030	MITER POINTER	120	080	JM23100084	DUSTPROOF RING	90
027	JM23100031	CROSS HEAD SCREW M5X15	70	081	JM23100085	LINEAR BEARING	970
028	JM23100032	PIVOT SHAFT	220	082	JM23100086	SLIDING BAR LOCKING KNOB	110
030	JM23100034	HEX BOLT M6X28	110	083	JM23100087	LOCK SCREW M6X8	70
031	JM23100035	ANTI-LOOSEN RING	70	084	JM23100088	PRESSURE SPRING	110
032	JM23100036	BEVEL SCALE	110	085	JM23100089	CROSS HEAD SCREW M5X12	70
033	JM23100037	FRICTION RING	120	086	JM23100090	SLIDING BAR REAR COVER	650
034	JM23100038	ELASTIC PIN 4X20	70	087	JM23100091	WRENCH CLIP	110
035	JM23100039	LOCKING ROD	180	089	JM23100092	CUTTING DEPTH ADJUSTABLE PLATE	110
036	JM23100040	H.S.BOLT M6X20	70	090	JM23100093	PIN C	110
037	JM23100041	FLAT WASHER	40	091	JM23100094	WAVE SPRING WASHER	70
038	JM23100042	45DEGREE LIMIT BRACKET	220	092	JM23100095	FLAT WASHER 8X14X1	40
039	JM23100043	RETAINING RING 10	70	093	JM23100096	DEPTH ADJUSTABLE PLATE BOLT	70
040	JM23100044	FLAT WASHER 12X20X1	40	094	JM23100097	PIN CAP	110
041	JM23100045	ANGLE LIMIT SHAFT	170	095	JM23100098	LINK SLEEVE	90
042	JM23100046	90DEGREE BLOCK SPRING	110	096	JM23100099	LINK	180
043	JM23100047	90DEGREE BLOCK	310	097	JM23100350	LOWER BLADE GUARD COMPLETE	880
044	JM23100048	BEVEL POINTER	110	098	JM23100101	GUARD RIVET	40
045	JM23100049	MITER PRESSION SPRING	130	099	JM23100102	GUARD WHEEL	40
046	JM23100330	SUPPORT ARM COMPLETE	4,550	100	JM23100103	WHEEL LOCK RING	40
047	JM23100051	LIMITED KNOB	130	102	JM23100105	LOWER BLADE GUARD PLATE	360
048	JM23100052	CLAMP PLATE	110	103	JM23100106	SQUARE NECK BOLT M6X12	110
049	JM23100053	BOWL TYPE PLATE	110	104	JM23100107	GUARD SPRING	160
050	JM23100054	SURFACE BEARING	460	105	JM23100108	BOWL PLATE	110
051	JM23100055	BIG FLAT WASHER 10X26X2.5	110	106	JM23100109	GUARD FIX PLATE	110
052	JM23100056	SLIDING BRACKET COVER	110	107	JM23100110	LOCKNUT M6	90
053	JM23100057	HEX NUT	110	108	JM23100111	H.S.BOLT M6X45	70
054	JM23100058	BEVEL LOCKING HANDLE	110	109	JM23100112	HEX BOLT FOR GUARD	110
055	JM23100059	RIP FENCE	2,130	110	JM23100113	CROSSHEAD SCREW FOR GUARD	110
056	JM23100060	FLAT WASHER 8	40	111	JM23100114	LINK PIN	70
057	JM23100061	SPRING WASHER 8	40	112	JM23100115	RETAINING RING 5	40

SERVICE DRAWING

MODEL NO. LS1017L

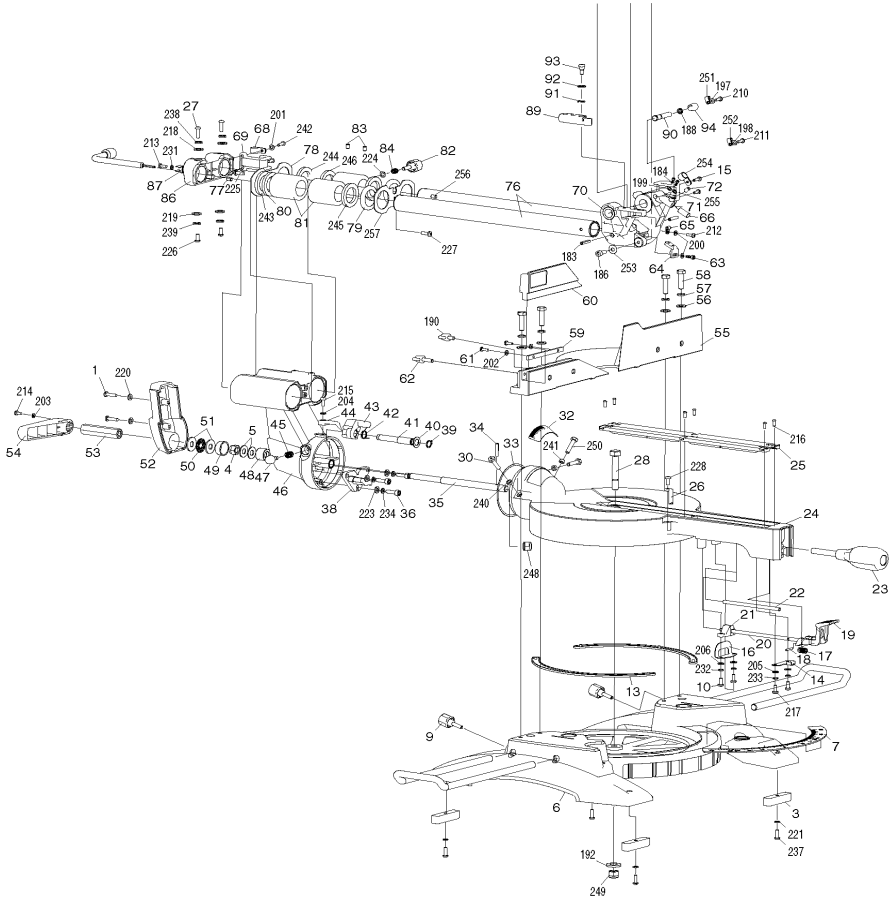

MODEL LS1017L

ITEM	PARTS ID	DESCRIPTION	PRICE/BAHT	ITEM	PARTS ID	DESCRIPTION	PRICE/BAHT
113	JM23100116	LOCK SCREW M6X12	70	174	JM23100182	SCREW CAP	110
114	JM23100117	DUST PORT	170	175	JM23000123	CARBON BRUSH	
115	JM23100118	HEX BOLT M6X25	70	176	JM23100184	CARBON BRUSH HOUSE	
116	JM23100119	LIMITED KNOB	180	177	JM23100185	H.S.SCREW M5X8	70
117	JM23100120	H.S.SCREW M6X15	70	178	JM23100186	SOFT STARTER	960
118	JM23100365	UP BLADE GUARD COMPLETE INC. 185	3,340	179	JM23100187	CROSS HEAD SCREW M5X35	90
119	JM23100122	DUST GUIDE PLATE	110	180	JM23100188	MOTOR REAR COVER	220
120	JM23100123	COPPER CONNECTION PLATE	170	181	JM23100189	CROSS HEAD SCREW M6X70	130
121	JM23100124	BLADE FLANGE	310	182	JM23100191	BLADE INNER RING	110
123	JM23100125	BATTERY BOX	210	183	JM23100145	ELASTIC PIN 5X30	70
124	JM23100126	LASER CORD TUBE	70	184	JM23100146	H.S.BOLT M4X10	70
125	JM23100127	LASER SWITCH COVER	80	185	JM23100147	BUFFER	150
126	JM23100128	BATTERY BOX COVER	90	186	JM23100148	H.S.BOLT M6X20 WITH GLUE	110
127	JM23100129	LASER SWITCH	190	187	JM23100149	SPRING WASHER 5	40
128	JM23100130	SELF-TAPPING SCREW 2.9X12	90	188	JM23100150	SEALING RING	110
129	JM23100131	ANODE COPPER SHEET	110	189	JM23100151	SPRING WASHER 6	40
130	JM23100132	CATHODE COPPER SHEET	90	190	JM23100152	WING KNOB,M6X10	110
131	JM23100133	BATTERY BOX SPRING	90	191	JM23100153	BLADE BOLT	110
132	JM23100134	LOCK PLATE	130	192	JM23100154	BIG FLAT WASHER 10	90
133	JM23100135	LOCK SPRING	110	193	JM23100190	SPECIAL WASHER 6	110
134	JM23100136	LOCK COVER PLATE	110	194	JM23100016	FLAT WASHER 4	40
135	JM23100137	INSERT	110	195	JM23100016	FLAT WASHER 4	40
136	JM23100138	LOCK COVER	110	196	JM23100016	FLAT WASHER 4	40
143	JM23100155	OUTPUT SHAFT	530	197	JM23100016	FLAT WASHER 4	40
144	JM23100156	KEY 5X10	130	198	JM23100016	FLAT WASHER 4	40
145	JM23100157	BEARING 6304	390	199	JM23100016	FLAT WASHER 4	40
146	JM23100158	RETAINING RING 20	90	200	JM23100016	FLAT WASHER 4	40
147	JM23100159	GEAR	560	201	JM23100016	FLAT WASHER 4	40
148	JM23100160	RETAINING RING 16	90	202	JM23100016	FLAT WASHER 4	40
149	JM23100161	OUTPUT SHAFT SCREW M8X12	90	203	JM23100016	FLAT WASHER 4	40
150	JM23100162	BUSH	230	204	JM23100016	FLAT WASHER 4	40
151	JM23100380	GEAR BOX COMPLETE INC. 150	1,570	205	JM23100016	FLAT WASHER 4	40
152	JM23100164	HANDLE LEFT SIDE	390	206	JM23100016	FLAT WASHER 4	40
153	JM23100165	PROTECTION TUBE	170	207	JM23100033	CROSS HEAD SCREW M4X12	60
154	JM23000154	POWER SUPPLY CORD	690	208	JM23100033	CROSS HEAD SCREW M4X12	60
155	JM23100166	CORD CLAMP	90	209	JM23100033	CROSS HEAD SCREW M4X12	60
156	JM23100167	SELF TAPPING SCREW M4X16	110	210	JM23100033	CROSS HEAD SCREW M4X12	60
157	JM23100168	BAFFLE RING	110	211	JM23100033	CROSS HEAD SCREW M4X12	60
158	JM23000100	ARMATURE ASS'Y (230V)		212	JM23100033	CROSS HEAD SCREW M4X12	60
159	JM23100169	CAPACITOR	310	213	JM23100033	CROSS HEAD SCREW M4X12	60
160	JM23100170	SELF-TAPPING SCREW M5X70	130	214	JM23100033	CROSS HEAD SCREW M4X12	60
161	JM23100171	TERMINAL POLE	180	215	JM23100033	CROSS HEAD SCREW M4X12	60
162	JM23100001	STATOR ASSEMBLY	3,730	216	JM23100033	CROSS HEAD SCREW M4X12	60
163	JM23100172	ABSORBER RING	110	217	JM23100033	CROSS HEAD SCREW M4X12	60
164	JM23100173	SWITCH LOCK BRACKET	110	218	JM23100007	FLAT WASHER 5	40
165	JM23100174	SWITCH HANDLE	230	219	JM23100007	FLAT WASHER 5	40
166	JM23100175	SWITCH LOCK PLATE	160	220	JM23100007	FLAT WASHER 5	40
167	JM23100176	SWITCH HANDLE SPRING	150	221	JM23100007	FLAT WASHER 5	40
168	JM23100177	BRAKE SYSTEM SWITCH KEY	90	222	JM23100007	FLAT WASHER 5	40
169	JM23100178	BRAKE SYSTEM SWITCH	180	223	JM23100041	FLAT WASHER	40
170	JM23100179	ELECTRIC SWITCH	680	224	JM23100041	FLAT WASHER	40
171	JM23100180	HANDLE RIGHT	390	225	JM23100089	CROSS HEAD SCREW M5X12	70
173	JM23100370	MOTOR HOUSE COMPLETE INC. 176,177	1,110	226	JM23100089	CROSS HEAD SCREW M5X12	70

SERVICE DRAWING

MODEL NO. LS1017L

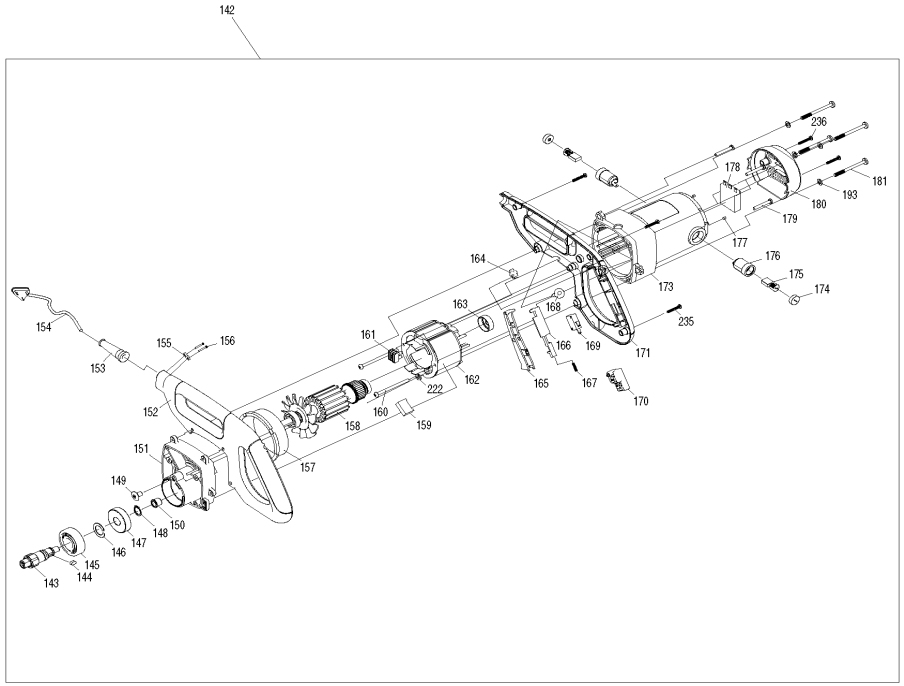

MODEL LS1017L

ITEM	PARTS ID	DESCRIPTION	PRICE/BAHT
227	JM23100089	CROSS HEAD SCREW M5X12	70
228	JM23100089	CROSS HEAD SCREW M5X12	70
229	JM23100015	SPRING WASHER 4	40
230	JM23100015	SPRING WASHER 4	40
231	JM23100015	SPRING WASHER 4	40
232	JM23100015	SPRING WASHER 4	40
233	JM23100015	SPRING WASHER 4	40
234	JM23100151	SPRING WASHER 6	40
235	JM23100167	SELF TAPPING SCREW M4X16	110
236	JM23100167	SELF TAPPING SCREW M4X16	110
237	JM23100006	CROSS HEAD SCREW M5X20	70
238	JM23100149	SPRING WASHER 5	40
239	JM23100149	SPRING WASHER 5	40
240	JM23100035	ANTI-LOOSEN RING	70
241	JM23100035	ANTI-LOOSEN RING	70
242	JM23100019	CROSS HEAD SCREW M4X18	70
243	JM23100083	LIMITED BRACKET	110
244	JM23100083	LIMITED BRACKET	110
245	JM23100084	DUSTPROOF RING	90
246	JM23100084	DUSTPROOF RING	90
247	JM23100104	FLAT WASHER 5	40
248	JM23100009	LOCKNUT M10	90
249	JM23100009	LOCKNUT M10	90
250	JM23100034	HEX BOLT M6X28	110
251	JM23100069	LASER CORD CLAMP	40
252	JM23100069	LASER CORD CLAMP	40
253	JM23100071	THIN FLAT WASHER 6	40
254	JM23100072	CORD CLAMP	90
255	JM23100073	CORD WRAP BRACKET	150
256	JM23100081	BUFFER	180
257	JM23100082	BEARING BAFFLE	180
258	JM23100098	LINK SLEEVE	90
259	JM23100124	BLADE FLANGE	310
260	JM23100390	LASER ASSEMBLY	1,260
A01	JM23100500	EXTENSION WING	650
A02	JM23100197	BOX WRENCH 13-3	680
A03	JM23100004	SAW BLADE	2,200
A04	JM27000328	TRIANGLE PLATE	120
A05	JM23100501	DUST BAG ASSEMBLY	320
A06	JM23100502	VISE ASSEMBLY	570

SERVICE DRAWING

MODEL NO. LS1018L

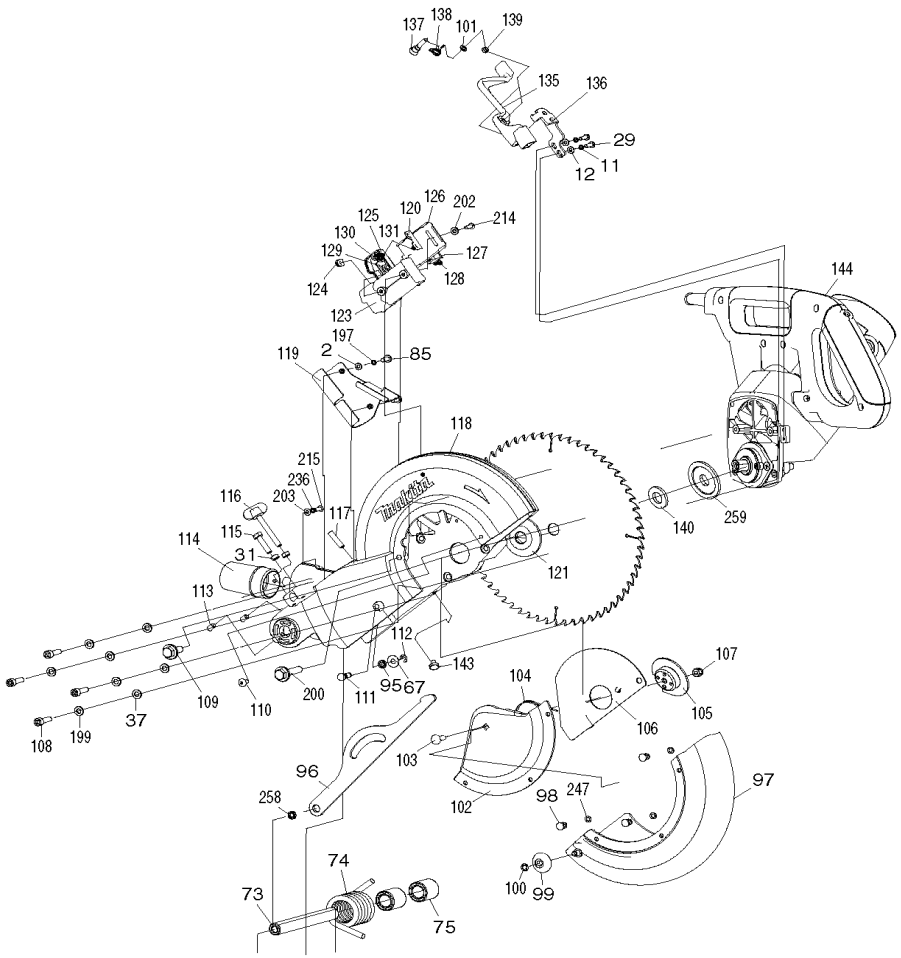

MODEL LS1018L

ITEM	PARTS ID	DESCRIPTION	PRICE/BAHT	ITEM	PARTS ID	DESCRIPTION	PRICE/BAHT
001	JM23100006	CROSS HEAD SCREW M5X20	70	058	JM23100062	HEX BOLT M8X30	110
002	JM23100007	FLAT WASHER 5	40	059	JM23100063	KEY	150
003	JM23100008	PAD	110	060	JM23100320	SUB FENCE COMPLETE	440
004	JM23100009	LOCKNUT M10	90	061	JM23100065	CROSS HEAD SCREW M4X8	40
005	JM23100010	FLAT WASHER 10	40	062	JM23100066	WING KNOB M6X20	110
006	JM23100300	BASE COMPLETE INC. 7	4,420	063	JM23100067	H.S.BOLT M4X12	70
007	JM23100012	MITER SCALE LABEL	130	064	JM23100068	LASER MOVING FIX PLATE	70
009	JM23100013	KNOB FOR EXT.WING	120	065	JM23100069	LASER CORD CLAMP	40
010	JM23100014	CROSS HEAD SCREW M4X15	70	066	JM23100070	LASER	530
013	JM23100017	FRICTION PLATE	120	067	JM23100071	THIN FLAT WASHER 6	40
014	JM23100018	LOCK PLATE A	160	068	JM23100072	CORD CLAMP	90
015	JM23100019	CROSS HEAD SCREW M4X18	70	069	JM23100073	CORD WRAP BRACKET	150
016	JM23100020	LOCK PLATE B	160	070	JM23100342	UP BLADE GUARD BRACKET CMPLT	4,700
017	JM23100021	LOCK SPRING	120	071	JM23100075	LASER BASE	170
018	JM23100022	LOCK PIN	130	072	JM23100076	H.S.SCREW M4X10	70
019	JM23100023	PRESS PLATE	130	073	JM23100077	CONNECTION SHAFT	180
020	JM23100024	LOCK SHAFT B	150	074	JM23100078	TORSION SPRING	380
021	JM23100025	WORKING TABLE LOCKING BRACKET	180	075	JM23100079	LOCATION TUBE	120
022	JM23100026	LOCK SHAFT A	110	076	JM23100080	SLIDING BAR	1,570
023	JM23100027	MITER LOCKING HANDLE	180	077	JM23100081	BUFFER	180
024	M23200100	WORKING TABLE COMPLETE INC. 32,:		078	JM23100082	BEARING BAFFLE	180
025	JM23100029	TABLE INSERT	150	079	JM23100083	LIMITED BRACKET	110
026	JM23100030	MITER POINTER	120	080	JM23100084	DUSTPROOF RING	90
027	JM23100031	CROSS HEAD SCREW M5X15	70	081	JM23100085	LINEAR BEARING	970
028	JM23100032	PIVOT SHAFT	220	082	JM23100086	SLIDING BAR LOCKING KNOB	110
030	JM23100034	HEX BOLT M6X28	110	083	JM23100087	LOCK SCREW M6X8	70
031	JM23100035	ANTI-LOOSEN RING	70	084	JM23100088	PRESSURE SPRING	110
032	JM23200004	BEVEL SCALE	110	085	JM23100089	CROSS HEAD SCREW M5X12	70
033	JM23100037	FRICTION RING	120	086	JM23100090	SLIDING BAR REAR COVER	650
034	JM23100038	ELASTIC PIN 4X20	70	087	JM23100091	WRENCH CLIP	110
035	JM23100039	LOCKING ROD	180	089	JM23100092	CUTTING DEPTH ADJUSTABLE PLATE	110
036	JM23100040	H.S.BOLT M6X20	70	090	JM23100093	PIN C	110
037	JM23100041	FLAT WASHER	40	091	JM23100094	WAVE SPRING WASHER	70
038	JM23200005	45DEGREE LIMIT BRACKET	220	092	JM23100095	FLAT WASHER 8X14X1	40
039	JM23100043	RETAINING RING 10	70	093	JM23100096	DEPTH ADJUSTABLE PLATE BOLT	70
040	JM23100044	FLAT WASHER 12X20X1	40	094	JM23100097	PIN CAP	110
041	JM23100045	ANGLE LIMIT SHAFT	170	095	JM23100098	LINK SLEEVE	90
042	JM23100046	90DEGREE BLOCK SPRING	110	096	JM23100099	LINK	180
043	JM23100047	90DEGREE BLOCK	310	097	JM23100350	LOWER BLADE GUARD COMPLETE	880
044	JM23100048	BEVEL POINTER	110	098	JM23100101	GUARD RIVET	40
045	JM23100049	MITER PRESSION SPRING	130	099	JM23100102	GUARD WHEEL	40
046	JM23100330	SUPPORT ARM COMPLETE	4,550	100	JM23100103	WHEEL LOCK RING	40
047	JM23100051	LIMITED KNOB	130	102	JM23100105	LOWER BLADE GUARD PLATE	360
048	JM23100052	CLAMP PLATE	110	103	JM23100106	SQUARE NECK BOLT M6X12	110
049	JM23100053	BOWL TYPE PLATE	110	104	JM23100107	GUARD SPRING	160
050	JM23100054	SURFACE BEARING	460	105	JM23100108	BOWL PLATE	110
051	JM23100055	FLAT WASHER 10X26X2.5	110	106	JM23100109	GUARD FIX PLATE	110
052	JM23100056	SLIDING BRACKET COVER	110	107	JM23100110	LOCKNUT M6	90
053	JM23100057	HEX NUT	110	108	JM23200006	H.S.BOLT M6X22	70
054	JM23100058	BEVEL LOCKING HANDLE	110	109	JM23100112	HEX BOLT FOR GUARD	110
055	JM23200037	RIP FENCE	1,580	110	JM23100113	CROSSHEAD SCREW FOR GUARD	110
056	JM23100060	FLAT WASHER 8	40	111	JM23100114	LINK PIN	70
057	JM23100061	SPRING WASHER 8	40	112	JM23100115	RETAINING RING 5	40

SERVICE DRAWING

MODEL NO. LS1018L

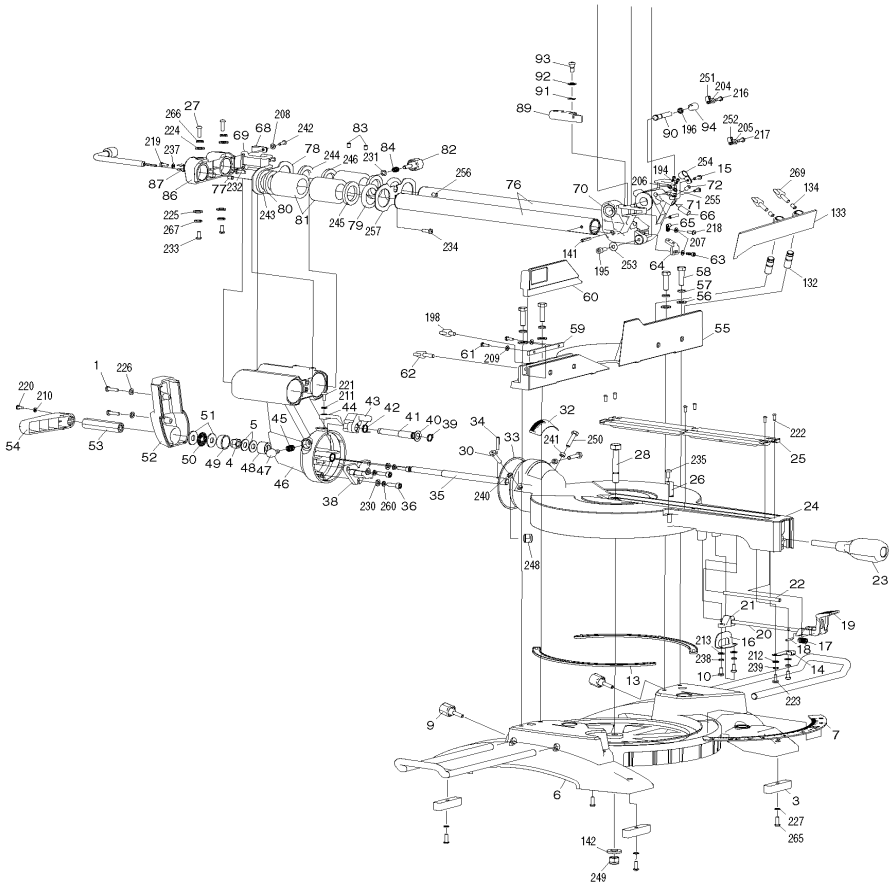

MODEL LS1018L

ITEM	PARTS ID	DESCRIPTION	PRICE/BAHT
113	JM23100116	LOCK SCREW M6X12	70
114	JM23100117	DUST PORT	170
115	JM23100118	HEX BOLT M6X25	70
116	JM23100119	LIMITED KNOB	180
117	JM23100120	H.S.SCREW M6X15	70
118	JM23200146	UP BLADE GUARD COMPLETE INC. 14	2,660
119	JM23100122	DUST GUIDE PLATE	110
120	JM23100123	COPPER CONNECTION PLATE	170
121	JM23100124	BLADE FLANGE	310
123	JM23100125	BATTERY BOX	210
124	JM23100126	LASER CORD TUBE	70
125	JM23100127	LASER SWITCH COVER	80
126	JM23100128	BATTERY BOX COVER	90
127	JM23100129	LASER SWITCH	190
128	JM23100130	SELF-TAPPING SCREW 2.9X12	90
129	JM23100131	ANODE COPPER SHEET	110
130	JM23100132	CATHODE COPPER SHEET	90
131	JM23100133	BATTERY BOX SPRING	90
132	JM23200007	RIGHT SUB FENCE CONNECTION PIN	210
133	JM23200110	RIGHT SUB FENCE COMPLETE	1,100
134	JM23200009	H.S.SCREW WITH DOG POINT M6X10	110
140	JM23100191	BLADE INNER RING	110
141	JM23100145	ELASTIC PIN 5X30	70
142	JM23100154	BIG FLAT WASHER 10	90
143	JM23100147	BUFFER	150
145	JM23200012	OUTPUT SHAFT RING 15.88	140
146	JM23200013	COUNTERSUNK HEAD BOLT M4X10	70
147	JM23200014	COUNTERSUNK HEAD BOLT M6X15	90
148	JM23200015	BEARING PRESS PLATE	160
149	JM23200016	BEARING COVER	310
150	JM23200017	OUTPUT SHAFT	530
151	JM23200018	KEY 4X10	110
152	JM23200031	BEARING 6003	370
153	JM23200020	GEAR	960
154	JM23200021	SHAFT WASHER	90
155	JM23200022	RETAINING RING 14	70
156	JM23200023	OIL BUSH	250
157	JM23200130	GEAR BOX COMPLETE INC. 156	2,190
158	JM23200025	GEAR LOCK SPRING	170
159	JM23200026	GEAR LOCK PIN	170
160	JM23200027	RETAINING RING 10.5X1	70
161	JM23200028	SHAFT FIX COVER	210
162	JM23200029	CROSS HEAD SCREW M5X18	70
163	JM23200030	RETAINING RING 16	70
164	JM23200031	BEARING 6003	370
165	JM23100168	BAFFLE RING	110
166	JM23200001	ROTOR ASSEMBLY	3,970
167	JM23200032	BEARING 6001	370
168	JM23100170	SELF-TAPPING SCREW M5X70	130
169	JM23100001	STATOR ASSEMBLY	3,730
170	JM23100172	ABSORBER RING	110
171	JM23200120	MOTOR HOUSE COMPLETE INC. 190,1	1,230
172	JM23100167	SELF TAPPING SCREW M4X16	110

ITEM	PARTS ID	DESCRIPTION	PRICE/BAHT
173	JM23100166	CORD CLAMP	90
174	JM23100165	PROTECTION TUBE	170
175	JM23000154	POWER SUPPLY CORD	690
176	JM23100169	CAPACITOR	310
177	JM23200034	RIGHT HANDLE	440
178	JM23100176	SWITCH HANDLE SPRING	150
179	JM23100171	TERMINAL POLE	180
180	JM23100174	SWITCH HANDLE	230
181	JM23100175	SWITCH LOCK PLATE	160
182	JM23100177	BRAKE SYSTEM SWITCH KEY	90
183	JM23100173	SWITCH LOCK BRACKET	110
184	JM23100178	BRAKE SYSTEM SWITCH	180
185	JM23100179	ELECTRIC SWITCH	680
186	JM23200035	CROSS HEAD SCREW M6X50	130
187	JM23200036	LEFT HANDLE	440
188	JM23100182	SCREW CAP	110
189	JM23000123	CARBON BRUSH	
190	JM23100184	CARBON BRUSH HOUSE	
191	JM23100185	H.S.SCREW M5X8	70
192	JM23100186	SOFT STARTER	960
193	JM23100188	MOTOR REAR COVER	220
194	JM23100146	H.S.BOLT M4X10	70
195	JM23100148	H.S.BOLT M6X20 WITH GLUE	110
196	JM23100150	SEALING RING	110
197	JM23100149	SPRING WASHER 5	40
198	JM23100152	WING KNOB,M6X10	110
199	JM23100151	SPRING WASHER 6	40
200	JM23100153	BLADE BOLT	110
201	JM23100190	SPECIAL WASHER 6	110
202	JM23100016	FLAT WASHER 4	40
203	JM23100016	FLAT WASHER 4	40
204	JM23100016	FLAT WASHER 4	40
205	JM23100016	FLAT WASHER 4	40
206	JM23100016	FLAT WASHER 4	40
207	JM23100016	FLAT WASHER 4	40
208	JM23100016	FLAT WASHER 4	40
209	JM23100016	FLAT WASHER 4	40
210	JM23100016	FLAT WASHER 4	40
211	JM23100016	FLAT WASHER 4	40
212	JM23100016	FLAT WASHER 4	40
213	JM23100016	FLAT WASHER 4	40
214	JM23100033	CROSS HEAD SCREW M4X12	60
215	JM23100033	CROSS HEAD SCREW M4X12	60
216	JM23100033	CROSS HEAD SCREW M4X12	60
217	JM23100033	CROSS HEAD SCREW M4X12	60
218	JM23100033	CROSS HEAD SCREW M4X12	60
219	JM23100033	CROSS HEAD SCREW M4X12	60
220	JM23100033	CROSS HEAD SCREW M4X12	60
221	JM23100033	CROSS HEAD SCREW M4X12	60
222	JM23100033	CROSS HEAD SCREW M4X12	60
223	JM23100033	CROSS HEAD SCREW M4X12	60
224	JM23100007	FLAT WASHER 5	40
225	JM23100007	FLAT WASHER 5	40

SERVICE DRAWING

MODEL NO. LS1018L

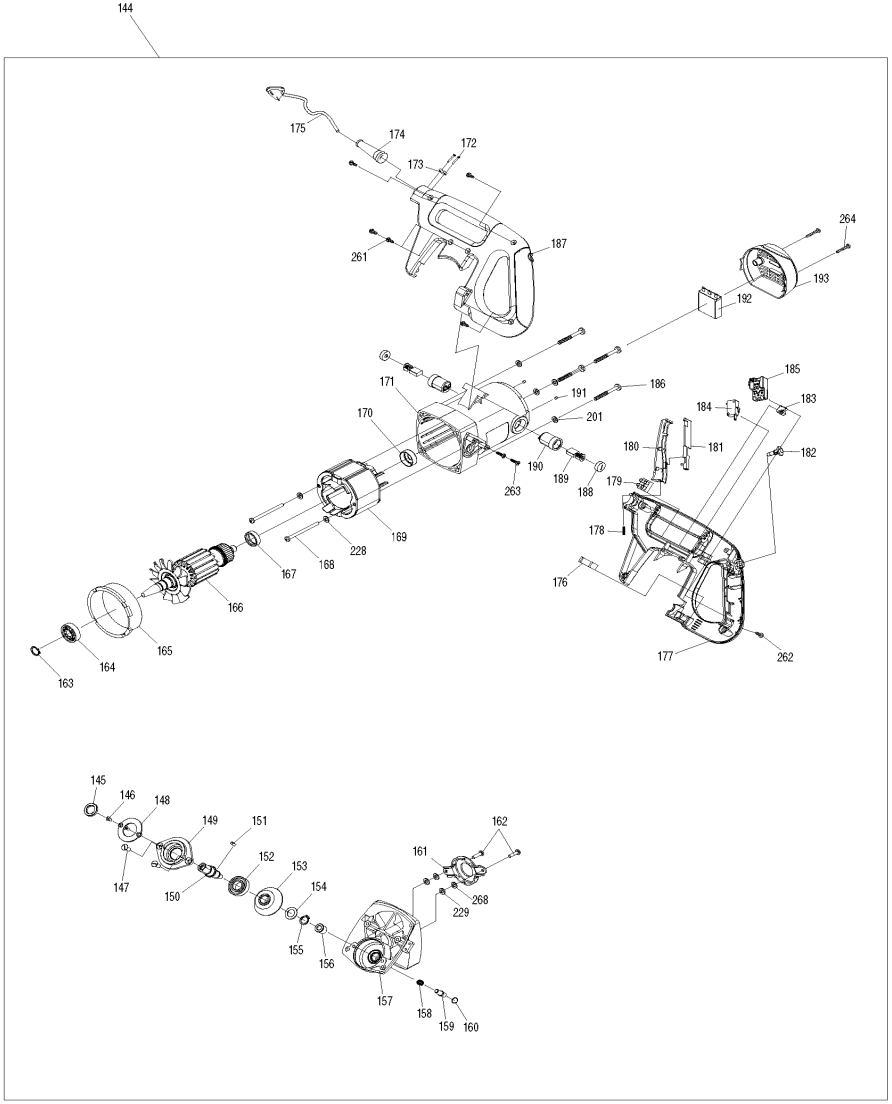

MODEL LS1018L

ITEM	PARTS ID	DESCRIPTION	PRICE/BAHT
226	JM23100007	FLAT WASHER 5	40
227	JM23100007	FLAT WASHER 5	40
228	JM23100007	FLAT WASHER 5	40
229	JM23100007	FLAT WASHER 5	40
230	JM23100041	FLAT WASHER	40
231	JM23100041	FLAT WASHER	40
232	JM23100089	CROSS HEAD SCREW M5X12	70
233	JM23100089	CROSS HEAD SCREW M5X12	70
234	JM23100089	CROSS HEAD SCREW M5X12	70
235	JM23100089	CROSS HEAD SCREW M5X12	70
236	JM23100015	SPRING WASHER 4	40
237	JM23100015	SPRING WASHER 4	40
238	JM23100015	SPRING WASHER 4	40
239	JM23100015	SPRING WASHER 4	40
240	JM23100035	ANTI-LOOSEN RING	70
241	JM23100035	ANTI-LOOSEN RING	70
242	JM23100019	CROSS HEAD SCREW M4X18	70
243	JM23100083	LIMITED BRACKET	110
244	JM23100083	LIMITED BRACKET	110
245	JM23100084	DUSTPROOF RING	90
246	JM23100084	DUSTPROOF RING	90
247	JM23100104	FLAT WASHER 5	40
248	JM23100009	LOCKNUT M10	90
249	JM23100009	LOCKNUT M10	90
250	JM23100034	HEX BOLT M6X28	110
251	JM23100069	LASER CORD CLAMP	40
252	JM23100069	LASER CORD CLAMP	40
253	JM23100071	THIN FLAT WASHER 6	40
254	JM23100072	CORD CLAMP	90
255	JM23100073	CORD WRAP BRACKET	150
256	JM23100081	BUFFER	180
257	JM23100082	BEARING BAFFLE	180
258	JM23100098	LINK SLEEVE	90
259	JM23100124	BLADE FLANGE	310
260	JM23100151	SPRING WASHER 6	40
261	JM23100167	SELF TAPPING SCREW M4X16	110
262	JM23100167	SELF TAPPING SCREW M4X16	110
263	JM23100167	SELF TAPPING SCREW M4X16	110
264	JM23100167	SELF TAPPING SCREW M4X16	110
265	JM23100006	CROSS HEAD SCREW M5X20	70
266	JM23100149	SPRING WASHER 5	40
267	JM23100149	SPRING WASHER 5	40
268	JM23100149	SPRING WASHER 5	40
269	JM23100066	WING KNOB M6X20	110
270	JM23100390	LASER ASSEMBLY	1,260
A01	JM23100500	EXTENSION WING	650
A02	JM23100197	BOX WRENCH 13-3	680
A03	JM23100004	SAW BLADE	2,200
A04	JM27000328	TRIANGLE PLATE	120
A05	JM23100501	DUST BAG ASSEMBLY	320
A06	JM23100502	VISE ASSEMBLY	570

SERVICE DRAWING

MODEL NO. LS1040

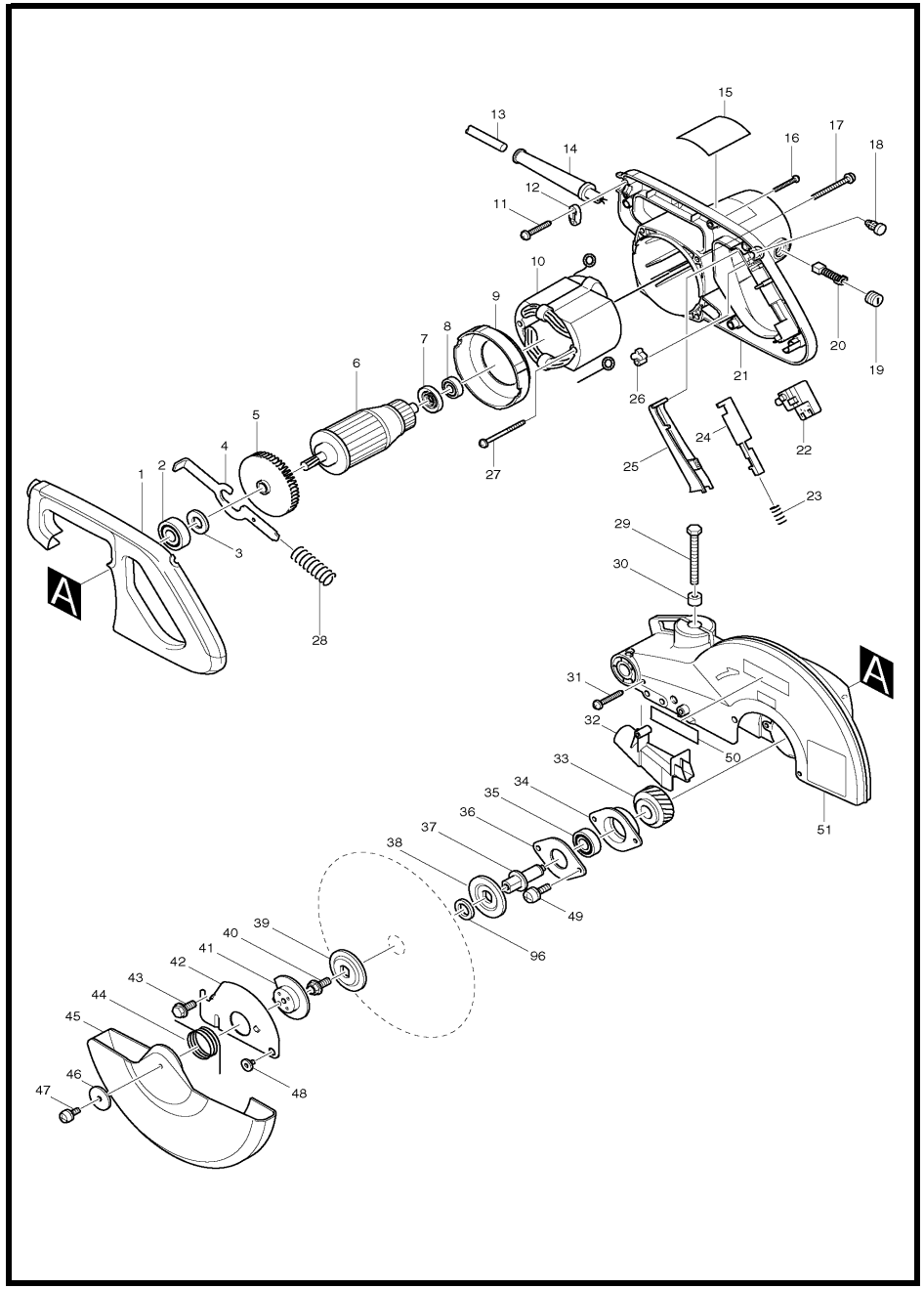

MODEL LS1040

ITEM	PARTS ID	DESCRIPTION	PRICE/BAHT	ITEM	PARTS ID	DESCRIPTION	PRICE/BAHT
001	416004-6	HANDLE COVER	490	055	253715-0	FLAT WASHER 6	60
002	211206-7	BALL BEARING 6202LLB	460	056	150662-5	SUB FENCE COMPLETE	670
003	267280-3	FLAT WASHER 15	40	057	344476-4	SUB FENCE PLATE	110
004	343641-2	SHAFT LOCK	220	058	252014-7	HEX. LOCK NUT M6-10	80
006	516718-8	ARMATURE ASS'Y 220V		059	251961-9	H.S.SET SCREW(FLAT POINT)M6X10	40
007	681640-9	INSULATION WASHER	80	060	257162-7	RING 7	130
008	211061-7	BALL BEARING 6000LLB	390	061	253823-7	FLAT WASHER 7	60
009	416442-2	BAFFLE PLATE	110	062	265984-1	HEX.SOCKET BUTTON HEAD BOLT M6	140
010	526068-3	FIELD ASS'Y 220-240V		063	344377-6	LINK PLATE	310
011	265995-6	TAPPING SCREW 4X18	40	064	265984-1	HEX.SOCKET BUTTON HEAD BOLT M6	140
012	687053-2	STRAIN RELIEF	70	065	253823-7	FLAT WASHER 7	60
013	691216-4	POWER SUPPLY CORD 1.25-2-2.5	950	066	257162-7	RING 7	130
014	682505-8	CORD GUARD 10-90	150	067	416006-2	LEVER 100	360
015	851559-8	NAME PLATE LS1040		068	911113-1	PAN HEAD SCREW M4X10	30
016	265995-6	TAPPING SCREW 4X18	40	069	265437-0	HEX. BOLT M10	290
017	911383-2	PAN HEAD SCREW M6X60	90	070	253024-7	FLAT WASHER 10	70
018	411478-6	SWITCH BUTTON	120	071	256836-7	ROD 16	230
019	643650-4	BRUSH HOLDER CAP 6.5-13.5	70	072	154463-3	ARM COMPLETE	1,070
020	B-80329	CARBON BRUSH SET CB-153A		073	322317-4	STOPPER PIN	190
021	153792-1	MOTOR HOUSING COMPLETE	1,380	074	213021-5	O RING 5	20
022	651923-1	SWITCH TG70B	850	075	233152-4	COMPRESSION SPRING 28	270
023	231457-6	COMPRESSION SPRING 3	50	076	344464-1	SPRING HOLDER	110
024	416000-4	LOCK OFF LEVER	140	077	256280-8	PIN 8	180
025	415999-0	SWITCH LEVER	190	079	911113-1	PAN HEAD SCREW M4X10	30
026	414546-4	CAM	120	080	344385-7	POINTER	110
027	266029-8	TAPPING SCREW 5X65	130	081	343799-7	SLIDE PLATE	150
028	231297-2	COMPRESSION SPRING 9	80	082	921452-1	HEX. BOLT M8X30	60
029	251667-9	HEX. BOLT M8X75	110	083	911213-7	PAN HEAD SCREW M5X12	40
030	262511-5	RUBBER SLEEVE 6	100	084	273495-2	GRIP 32	290
031	265995-6	TAPPING SCREW 4X18	40	085	344381-5	KNOCK SPRING	320
032	453695-2	GUIDE COVER	100	086	150585-7	BASE COMPLETE	5,140
033	226465-0	HELICAL GEAR 42	530	087	316824-7	TURN BASE	3,520
034	316821-3	BEARING BOX	480	088	416001-2	KERF BOARD	150
035	211256-2	BALL BEARING 6203LLB	520	089	416001-2	KERF BOARD	150
036	285685-5	BEARING RETAINER 64	140	090	921452-1	HEX. BOLT M8X30	60
037	322865-3	SPINDLE	980	091	931402-8	HEX. NUT M8	70
038	224333-1	FLANGE 53	300	092	252105-4	HEX. LOCK NUT M8-13	80
039	224333-1	FLANGE 53	300	093	253762-1	FLAT WASHER 8	130
040	265355-2	HEX. FLANGE HEAD BOLT M8X20	140	094	931402-8	HEX. NUT M8	70
041	343639-9	CENTER PLATE	310	095	921452-1	HEX. BOLT M8X30	60
042	344380-7	CENTER COVER	200	096	257060-5	RING 15.8	140
043	265324-3	HEX. FLANGE HEAD BOLT M8X12	140	097	251887-5	SCREW M6X10	120
044	231593-8	TORSION SPRING 36	110	098	265708-5	SCREW M6X20	130
045	416003-8	SAFETY COVER	840	A01	411478-6	SWITCH BUTTON	120
046	267136-0	FLAT WASHER 5	110	A02	762001-3	TRIANGULAR RULE	120
047	911213-7	PAN HEAD SCREW M5X12	40	A03	782212-4	SOCKET WRENCH 13	290
048	265985-9	HEX.SOCKET HEAD BOLT M6	150	A04	122523-9	DUST BAG ASS'Y	570
049	911223-4	PAN HEAD SCREW M5X16	40	A05	193471-9	SUB PLATE ASS'Y	310
051	188324-5	BLADE CASE SET	2,470	A06	122536-0	VISE ASS'Y	540
051	140648-7	BLADE CASE COMPLETE	2,770	A07	257022-3	RING 16	180
052	265488-3	HEX. BOLT M8X30	110	A08	322312-4	HOLDER	660
053	318847-1	GUIDE RULE	1,620	A09	A-82030	T.C.T. SAW BLADE 255X30TX25.4	3,180
054	912342-9	COUNTERSUNK HEAD SCREW M6X25	50	E05	651941-9	SWITCH V-15-2A5	280

SERVICE DRAWING

MODEL NO. LS1040

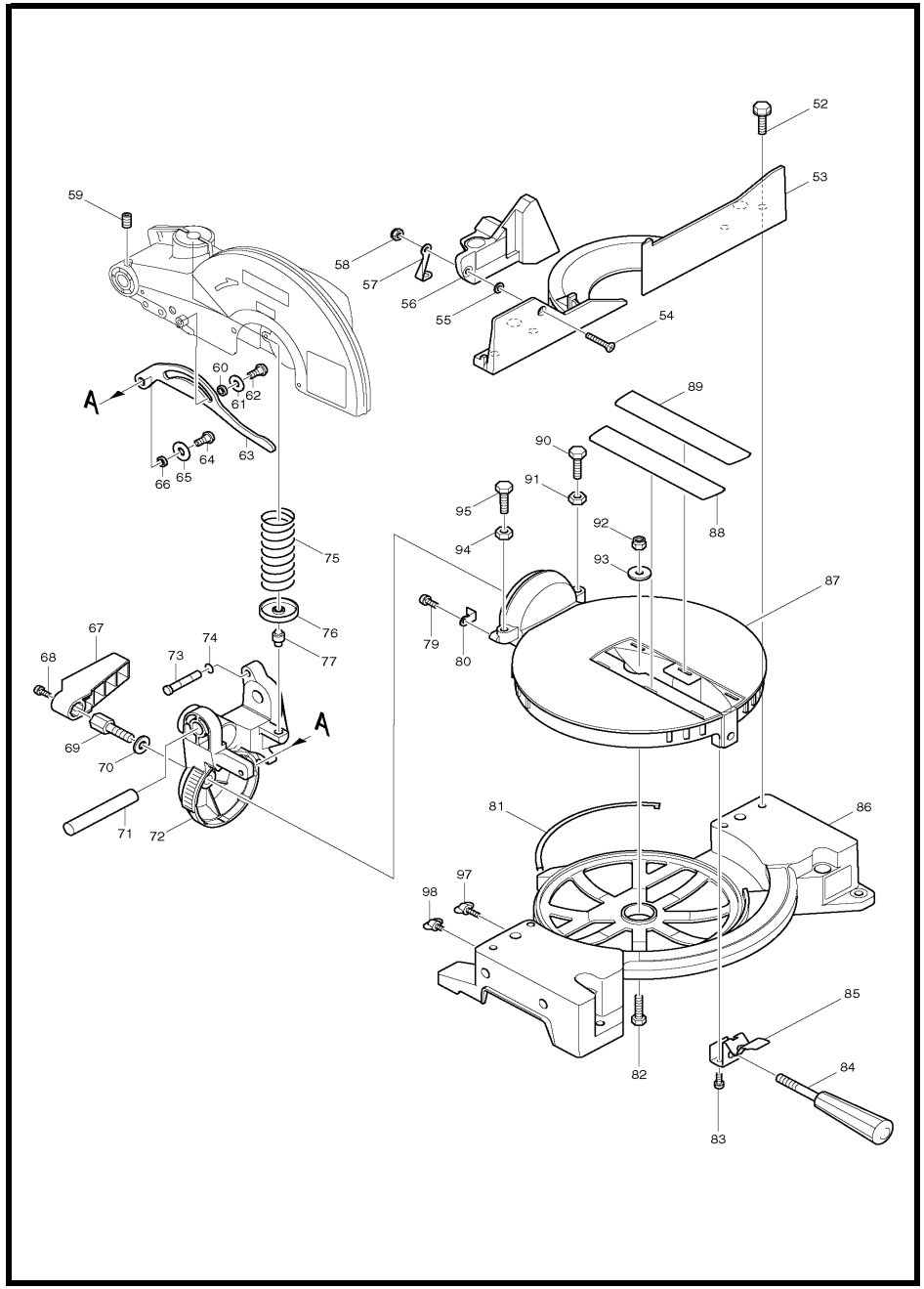

MODEL LS1040

ITEM	PARTS ID	DESCRIPTION	PRICE/BAHT	ITEM	PARTS ID	DESCRIPTION	PRICE/BAHT
001	416004-6	HANDLE COVER	490	055	253715-0	FLAT WASHER 6	60
002	211206-7	BALL BEARING 6202LLB	460	056	150662-5	SUB FENCE COMPLETE	670
003	267280-3	FLAT WASHER 15	40	057	344476-4	SUB FENCE PLATE	110
004	343641-2	SHAFT LOCK	220	058	252014-7	HEX. LOCK NUT M6-10	80
006	516718-8	ARMATURE ASS'Y 220V		059	251961-9	H.S.SET SCREW(FLAT POINT)M6X10	40
007	681640-9	INSULATION WASHER	80	060	257162-7	RING 7	130
008	211061-7	BALL BEARING 6000LLB	390	061	253823-7	FLAT WASHER 7	60
009	416442-2	BAFFLE PLATE	110	062	265984-1	HEX.SOCKET BUTTON HEAD BOLT M6	140
010	526068-3	FIELD ASS'Y 220-240V		063	344377-6	LINK PLATE	310
011	265995-6	TAPPING SCREW 4X18	40	064	265984-1	HEX.SOCKET BUTTON HEAD BOLT M6	140
012	687053-2	STRAIN RELIEF	70	065	253823-7	FLAT WASHER 7	60
013	691216-4	POWER SUPPLY CORD 1.25-2-2.5	950	066	257162-7	RING 7	130
014	682505-8	CORD GUARD 10-90	150	067	416006-2	LEVER 100	360
015	851559-8	NAME PLATE LS1040		068	911113-1	PAN HEAD SCREW M4X10	30
016	265995-6	TAPPING SCREW 4X18	40	069	265437-0	HEX. BOLT M10	290
017	911383-2	PAN HEAD SCREW M6X60	90	070	253024-7	FLAT WASHER 10	70
018	411478-6	SWITCH BUTTON	120	071	256836-7	ROD 16	230
019	643650-4	BRUSH HOLDER CAP 6.5-13.5	70	072	154463-3	ARM COMPLETE	1,070
020	B-80329	CARBON BRUSH SET CB-153A		073	322317-4	STOPPER PIN	190
021	153792-1	MOTOR HOUSING COMPLETE	1,380	074	213021-5	O RING 5	20
022	651923-1	SWITCH TG70B	850	075	233152-4	COMPRESSION SPRING 28	270
023	231457-6	COMPRESSION SPRING 3	50	076	344464-1	SPRING HOLDER	110
024	416000-4	LOCK OFF LEVER	140	077	256280-8	PIN 8	180
025	415999-0	SWITCH LEVER	190	079	911113-1	PAN HEAD SCREW M4X10	30
026	414546-4	CAM	120	080	344385-7	POINTER	110
027	266029-8	TAPPING SCREW 5X65	130	081	343799-7	SLIDE PLATE	150
028	231297-2	COMPRESSION SPRING 9	80	082	921452-1	HEX. BOLT M8X30	60
029	251667-9	HEX. BOLT M8X75	110	083	911213-7	PAN HEAD SCREW M5X12	40
030	262511-5	RUBBER SLEEVE 6	100	084	273495-2	GRIP 32	290
031	265995-6	TAPPING SCREW 4X18	40	085	344381-5	KNOCK SPRING	320
032	453695-2	GUIDE COVER	100	086	150585-7	BASE COMPLETE	5,140
033	226465-0	HELICAL GEAR 42	530	087	316824-7	TURN BASE	3,520
034	316821-3	BEARING BOX	480	088	416001-2	KERF BOARD	150
035	211256-2	BALL BEARING 6203LLB	520	089	416001-2	KERF BOARD	150
036	285685-5	BEARING RETAINER 64	140	090	921452-1	HEX. BOLT M8X30	60
037	322865-3	SPINDLE	980	091	931402-8	HEX. NUT M8	70
038	224333-1	FLANGE 53	300	092	252105-4	HEX. LOCK NUT M8-13	80
039	224333-1	FLANGE 53	300	093	253762-1	FLAT WASHER 8	130
040	265355-2	HEX. FLANGE HEAD BOLT M8X20	140	094	931402-8	HEX. NUT M8	70
041	343639-9	CENTER PLATE	310	095	921452-1	HEX. BOLT M8X30	60
042	344380-7	CENTER COVER	200	096	257060-5	RING 15.8	140
043	265324-3	HEX. FLANGE HEAD BOLT M8X12	140	097	251887-5	SCREW M6X10	120
044	231593-8	TORSION SPRING 36	110	098	265708-5	SCREW M6X20	130
045	416003-8	SAFETY COVER	840	A01	411478-6	SWITCH BUTTON	120
046	267136-0	FLAT WASHER 5	110	A02	762001-3	TRIANGULAR RULE	120
047	911213-7	PAN HEAD SCREW M5X12	40	A03	782212-4	SOCKET WRENCH 13	290
048	265985-9	HEX.SOCKET HEAD BOLT M6	150	A04	122523-9	DUST BAG ASS'Y	570
049	911223-4	PAN HEAD SCREW M5X16	40	A05	193471-9	SUB PLATE ASS'Y	310
051	188324-5	BLADE CASE SET	2,470	A06	122536-0	VISE ASS'Y	540
051	140648-7	BLADE CASE COMPLETE	2,770	A07	257022-3	RING 16	180
052	265488-3	HEX. BOLT M8X30	110	A08	322312-4	HOLDER	660
053	318847-1	GUIDE RULE	1,620	A09	A-82030	T.C.T. SAW BLADE 255X30TX25.4	3,180
054	912342-9	COUNTERSUNK HEAD SCREW M6X25	50	E05	651941-9	SWITCH V-15-2A5	280

SERVICE DRAWING

MODEL NO. LS1212

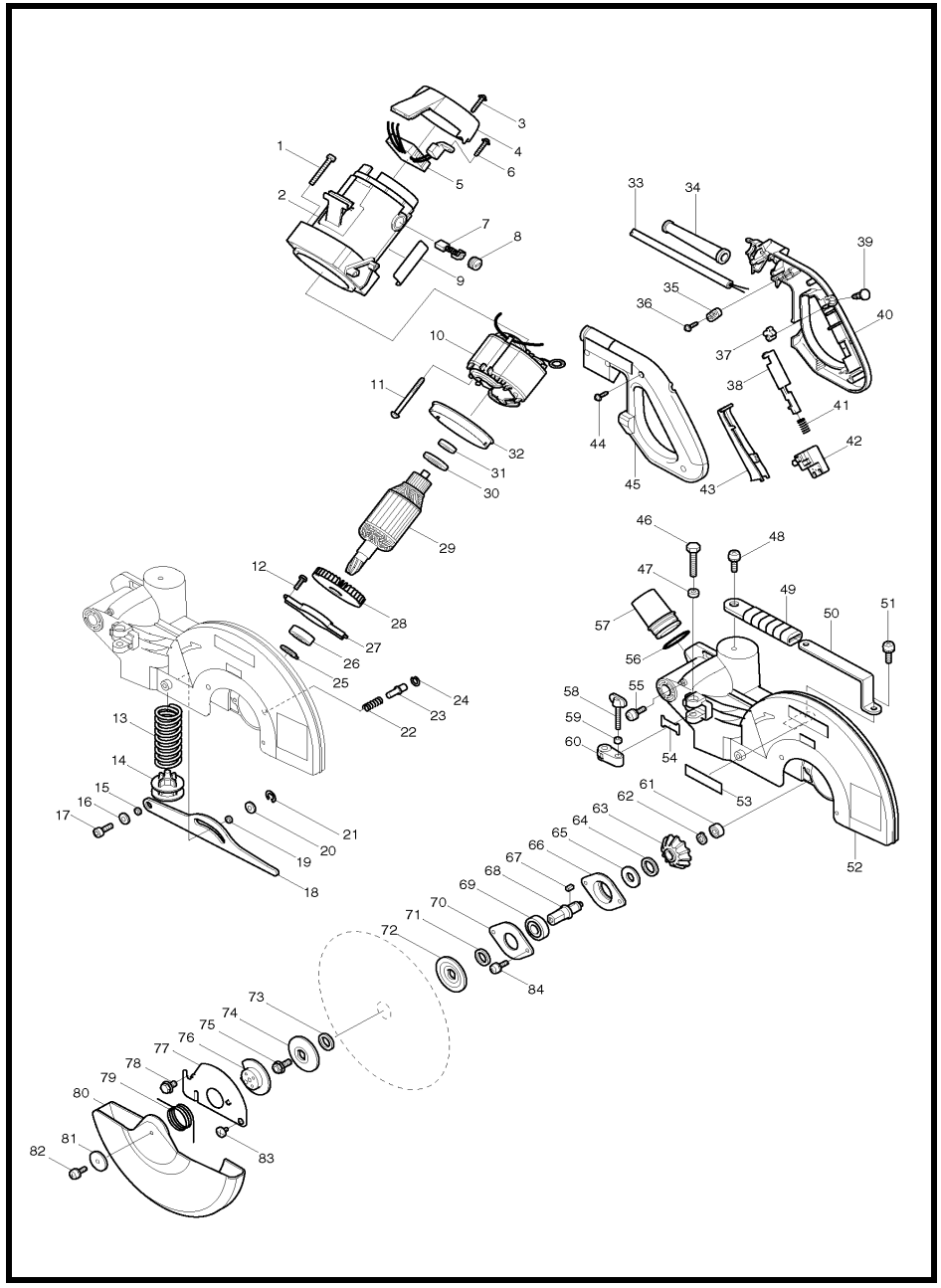

MODEL LS1212

ITEM	PARTS ID	DESCRIPTION	PRICE/BAHT	ITEM	PARTS ID	DESCRIPTION	PRICE/BAHT
001	911373-5	PAN HEAD SCREW M6X50	80	057	419277-0	DUST NOZZLE	190
002	159962-0	MOTOR HOUSING COMPLETE	1,470	058	265717-4	SCREW M6X43	180
003	265995-6	TAPPING SCREW 4X18	40	059	262001-8	URETHANE RING 5	150
004	416075-3	REAR COVER	370	060	317176-9	STOPPER ARM	230
005	631239-0	CONTROLLER	3,850	061	211031-6	BALL BEARING 608LLB	190
006	265995-6	TAPPING SCREW 4X18	40	062	961054-1	RETAINING RING S-14	30
007	B-80329	CARBON BRUSH SET CB-153A		063	226750-1	SPIRAL BEVEL GEAR 35	1,730
008	643650-4	BRUSH HOLDER CAP 6.5-13.5	70	064	262074-1	RUBBER RING 20	80
010	596158-6	FIELD ASS'Y 220-240V		065	267035-6	FLAT WASHER 14	120
011	266059-9	TAPPING SCREW 5X75	150	066	316473-0	BEARING BOX	670
012	911223-4	PAN HEAD SCREW M5X16	40	067	254202-2	KEY 4	90
013	233187-5	COMPRESSION SPRING 34	460	068	322989-5	SPINDLE	1,020
014	316470-6	SPRING HOLDER	330	069	211278-2	BALL BEARING 6203DDW	530
015	257163-5	RING 6	140	070	285828-9	BEARING RETAINER 66	170
016	253804-1	FLAT WASHER 6	40	071	257022-3	RING 16	180
017	922331-6	HEX. SOCKET HEAD BOLT M6X20	90	072	224333-1	FLANGE 53	300
018	344472-2	LINK PLATE	380	073	257060-5	RING 15.8	140
019	257163-5	RING 6	140	074	224333-1	FLANGE 53	300
020	253804-1	FLAT WASHER 6	40	075	265405-3	HEX. FRANGE HEAD BOLT M10X20	190
021	961018-5	STOP RING E-5	50	076	344473-0	CENTER PLATE	250
022	231240-1	COMPRESSION SPRING 7	20	077	344038-8	CENTER COVER	270
023	256633-1	PIN 6	110	078	265324-3	HEX. FLANGE HEAD BOLT M8X12	140
024	231928-3	RING SPRING 8	40	079	231613-8	TORSION SPRING 45	190
025	961057-5	RETAINING RING S-17	40	080	450130-1	SAFETY COVER	1,020
026	211251-2	BALL BEARING 6003LLB	530	081	253977-0	FLAT WASHER 6	100
027	285686-3	BEARING RETAINER 94	270	082	911213-7	PAN HEAD SCREW M5X12	40
029	516738-2	ARMATURE ASS'Y 220V		083	265008-3	+ FLAT HEAD SCREW M5	170
030	681642-5	INSULATION WASHER	570	084	911223-4	PAN HEAD SCREW M5X16	40
031	211061-7	BALL BEARING 6000LLB	390	085	265406-1	HEX. BOLT M10X130	280
032	416264-0	BAFFLE PLATE	160	086	253024-7	FLAT WASHER 10	70
033	691216-4	POWER SUPPLY CORD 1.25-2-2.5	950	087	331428-4	PIN 16-113	290
034	682505-8	CORD GUARD 10-90	150	088	252105-4	HEX. LOCK NUT M8-13	80
035	687053-2	STRAIN RELIEF	70	089	941201-0	FLAT WASHER 8	110
036	265995-6	TAPPING SCREW 4X18	40	090	317807-0	ARM	9,810
037	414546-4	CAM	120	091	322629-5	STOPPER PIN	230
038	416000-4	LOCK OFF LEVER	140	092	213011-8	O RING 7	20
039	411478-6	SWITCH BUTTON	120	093	687049-3	STRAIN RELIEF	50
040	182910-4	HANDLE SET	900	094	266026-4	TAPPING SCREW BIND CT 4X12	30
041	231457-6	COMPRESSION SPRING 3	50	095	252130-5	HEX. LOCK NUT M10-17	140
042	651923-1	SWITCH TG70B	850	096	253024-7	FLAT WASHER 10	70
043	415999-0	SWITCH LEVER	190	097	265455-8	HEX. BOLT M8X28	130
044	265995-6	TAPPING SCREW 4X18	40	098	265455-8	HEX. BOLT M8X28	130
045	182910-4	HANDLE SET	900	099	216003-6	STEEL BALL 10	80
046	921467-8	HEX. BOLT M8X45	80	100	344475-6	GUIDE PLATE	510
047	262003-4	RUBBER RING 6	80	101	231631-6	TORSION SPRING 30	350
048	911323-0	PAN HEAD SCREW M6X16	60	102	413067-3	INDICATION PLATE	120
049	421562-9	GRIP	230	103	911114-9	PAN HEAD SCREW M4X10	30
050	344420-1	GRIP HOLDER	260	104	233168-9	COMPRESSION SPRING 5	80
051	911323-0	PAN HEAD SCREW M6X16	60	105	266131-7	H.S.SET SCREW(FLATPOINT)M12X12	80
052	188374-0	BLADE CASE SET	7,420	106	253852-0	FLAT WASHER 8	150
054	344045-1	STOPPER ARM PLATE	80	107	265442-7	HEX. BOLT M8X40	100
055	911113-1	PAN HEAD SCREW M4X10	30	108	415209-5	KERF BOARD	240
056	213460-9	O RING 35	50	109	266026-4	TAPPING SCREW BIND CT 4X12	30

SERVICE DRAWING

MODEL NO. LS1212

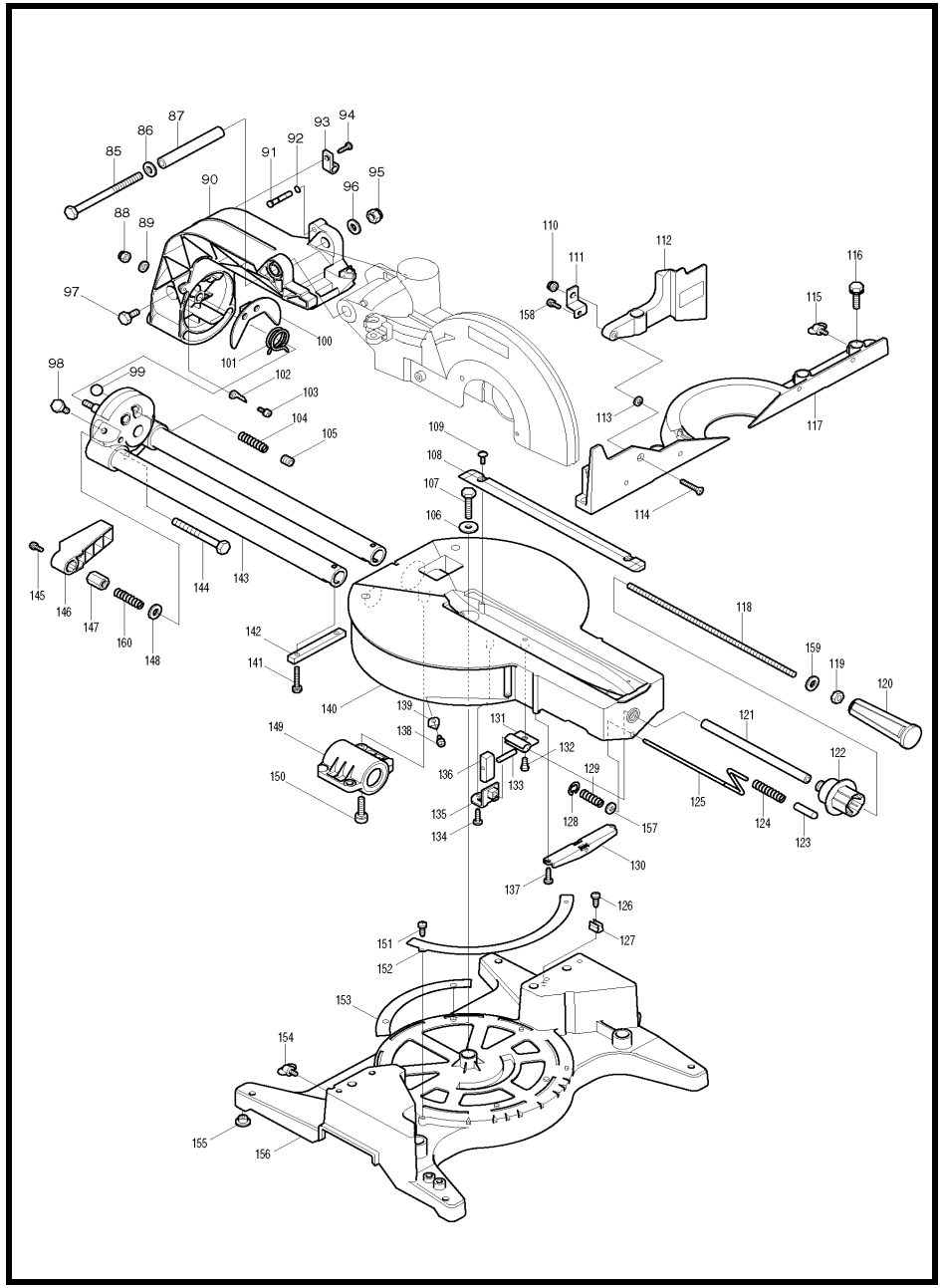

MODEL LS1212

ITEM	PARTS ID	DESCRIPTION	PRICE/BAHT
110	252014-7	HEX. LOCK NUT M6-10	80
111	344463-3	SUB FENCE PLATE	100
112	150732-0	SUB FENCE COMPLETE	1,390
113	253804-1	FLAT WASHER 6	40
114	912357-6	COUNTERSUNK HEAD SCREW M6X35	50
115	251887-5	SCREW M6X10	120
116	265488-3	HEX. BOLT M8X30	110
117	316905-7	GUIDE FENCE	5,330
118	266132-5	SCREW M8X320	330
119	931402-8	HEX. NUT M8	70
120	273444-9	GRIP 37	580
121	331491-7	PIN 9-200	190
122	152541-3	KNOB 48 COMPLETE	470
123	421563-7	CAP 10	130
124	322924-3	COIL SPRING	80
125	322938-2	LOCK PIN	490
126	266034-5	TAPPING SCREW CT 4X16	50
127	232075-3	LEAF SPRING	140
128	961018-5	STOP RING E-5	50
129	231307-5	COMPRESSION SPRING 6	60
130	316882-3	PIN HOLDER	660
131	344411-2	SLIDE STOPPER	170
132	251267-5	+ PAN HEAD SCREW M6	90
133	256196-7	PIN 5	90
134	266034-5	TAPPING SCREW CT 4X16	50
135	344412-0	STOPPER HOLDER	190
136	331493-3	TURN STOPPER	250
137	266034-5	TAPPING SCREW CT 4X16	50
138	911113-1	PAN HEAD SCREW M4X10	30
139	343678-9	POINTER	130
140	151480-4	TURN BASE COMPLETE	15,740
141	921356-7	HEX. BOLT M6X35	60
142	152542-1	SQUARE ROD COMPLETE	430
143	151477-3	ARM HOLDER COMPLETE	8,350
144	251662-9	HEX. BOLT M10X100	120
145	911113-1	PAN HEAD SCREW M4X10	30
146	416006-2	LEVER 100	360
147	252144-4	HEX. NUT M10-17	250
148	253024-7	FLAT WASHER 10	70
149	152540-5	BEARING BOX B COMPLETE	4,000
150	922451-6	HEX. SOCKET HEAD BOLT M8X30	90
151	266026-4	TAPPING SCREW BIND CT 4X12	30
152	816325-0	MITER SCALE PLATE	460
153	344474-8	SLIDE PLATE	270
154	251887-5	SCREW M6X10	120
155	286212-1	CAP 20	50
156	150733-8	BASE COMPLETE	13,810
157	253804-1	FLAT WASHER 6	40
158	911113-1	PAN HEAD SCREW M4X10	30
159	941201-0	FLAT WASHER 8	110
160	231266-3	COMPRESSION SPRING 5	110
161	271601-3	KNOB 20	90

ITEM	PARTS ID	DESCRIPTION	PRICE/BAHT
166	251961-9	H.S.SET SCREW(FLAT POINT)M6X10	40
A01	762001-3	TRIANGULAR RULE	120
A02	782212-4	SOCKET WRENCH 13	290
A03	122523-9	DUST BAG ASS'Y	570
A04	411478-6	SWITCH BUTTON	120
A05	322312-4	HOLDER	660
A06	122539-4	HOLDER ASS'Y	2,450
A07	251887-5	SCREW M6X10	120
A08	322983-7	VISE ROD	400
A09	271303-1	KNOB 40	460
A10	122540-9	VISE ASS'Y	630
A11	253804-1	FLAT WASHER 6	40
A12	343651-9	VISE PLATE	150
A13	251370-2	+ PAN HEAD SCREW M5	80
E04	651941-9	SWITCH V-15-2A5	280
E05	654069-2	RECEPTACLE	110
E06	654509-0	CONNECTOR 2-SD	40

SERVICE DRAWING

MODEL NO. LS1216/LS1216L

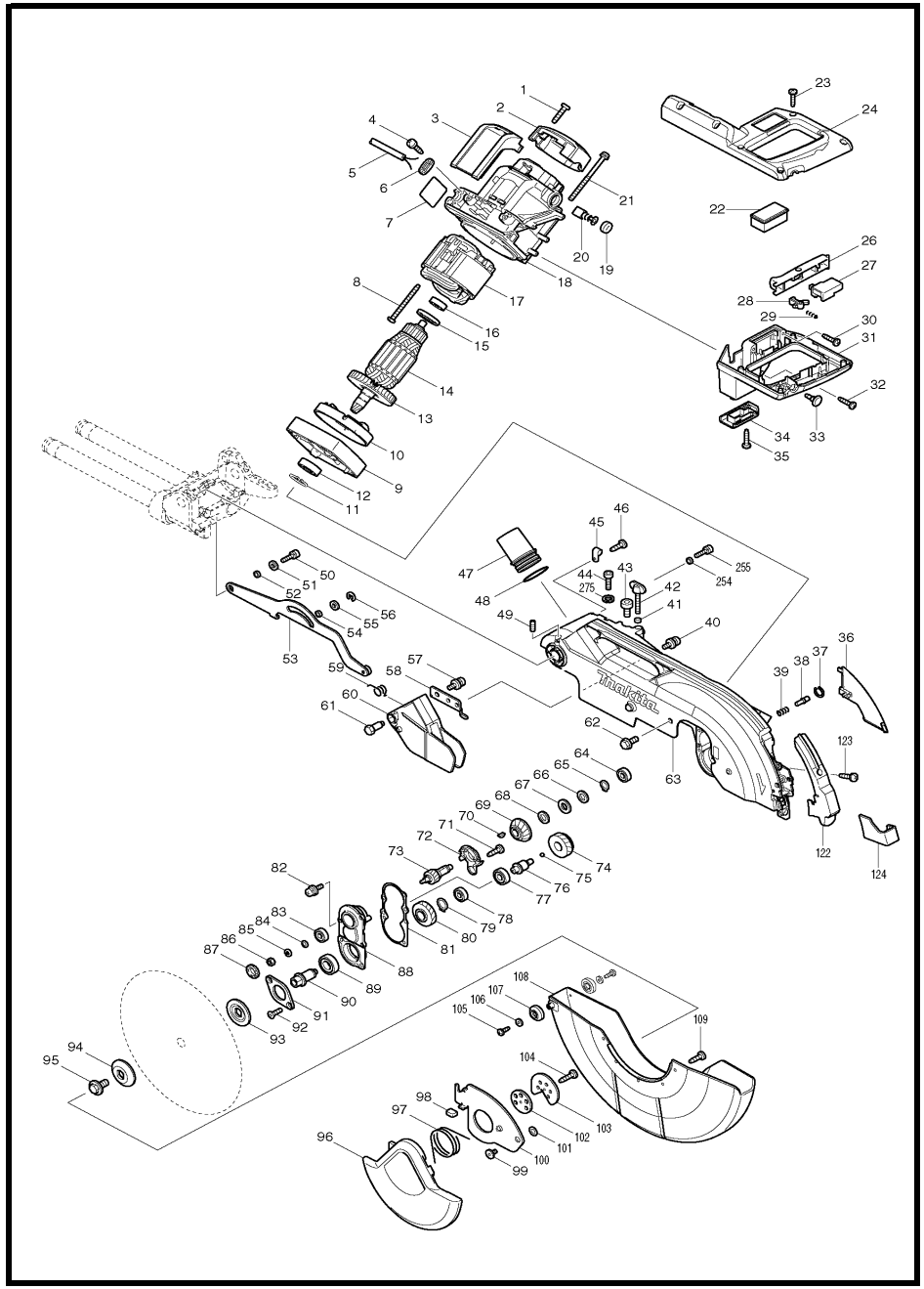

MODEL LS1216/LS1216L

ITEM	PARTS ID	DESCRIPTION	PRICE/BAHT	ITEM	PARTS ID	DESCRIPTION	PRICE/BAHT
001	265995-6	TAPPING SCREW 4X18	40	057	911113-1	PAN HEAD SCREW M4X10	30
002	450999-3	REAR COVER	190	058	346050-4	GUARD HOLDER	90
003	631865-5	CONTROLLER	1,760	059	231675-6	TORSION SPRING 11	50
004	265995-6	TAPPING SCREW 4X18	40	060	453635-0	GUARD	380
005	691015-4	POWER SUPPLY CORD 0.75-2-2.5	740	061	325645-6	GUARD SHAFT	110
006	687140-7	STRAIN RELIEF	40	062	265324-3	HEX. FLANGE HEAD BOLT M8X12	140
008	266329-6	TAPPING SCREW 5X60	70	063	140152-6	BLADE CASE COMPLETE	5,800
009	318471-0	MOTOR BRACKET	560	064	210005-4	BALL BEARING 608DDW	240
010	451194-8	BAFFLE PLATE	110	065	961052-5	RETAINING RING S-12	40
011	961057-5	RETAINING RING S-17	40	066	253744-3	FLAT WASHER 12	50
012	210301-0	BALL BEARING 6003DDW	600	067	261104-5	RUBBER WASHER 12	50
014	517843-8	ARMATURE ASSEMBLY 220V		068	253744-3	FLAT WASHER 12	50
015	681642-5	INSULATION WASHER	570	069	227550-2	SPIRAL BEVEL GEAR 32	410
016	210067-2	BALL BEARING 6000ZZ	150	070	254001-2	WOODRUFF KEY 4	80
017	596358-8	FIELD ASSEMBLY 220V		071	266026-4	TAPPING SCREW BIND CT 4X12	30
018	140083-9	MOTOR HOUSING COMPLETE	860	072	451002-3	GREASE HOLDER	90
019	643650-4	BRUSH HOLDER CAP 6.5-13.5	70	073	227701-7	HELICAL GEAR 14	360
020	B-80329	CARBON BRUSH SET CB-153A		074	227702-5	HERICAL GEAR 27	380
021	911948-0	PAN HEAD SCREW M6X80 WITH WR	90	075	216024-8	STEEL BALL 4	20
022	451015-4	COVER	110	076	325643-0	GEAR SHAFT	250
023	265995-6	TAPPING SCREW 4X18	40	077	210067-2	BALL BEARING 6000ZZ	150
024	450998-5	HANDLE COVER	360	078	210005-4	BALL BEARING 608DDW	240
026	451003-1	SWITCH LEVER	130	079	961055-9	RETAINING RING S-15	50
027	650618-3	SWITCH TG72B-1	590	080	227703-3	HERICAL GEAR 28	360
028	416356-5	LOCK-OFF LEVER	170	081	442147-8	GASKET	110
029	231026-3	COMPRESSION SPRING 4	70	082	911223-4	PAN HEAD SCREW M5X16	40
030	265995-6	TAPPING SCREW 4X18	40	083	210005-4	BALL BEARING 608DDW	240
031	140049-9	HANDLE COMPLETE	390	084	267010-2	FLAT WASHER 5	80
032	265995-6	TAPPING SCREW 4X18	40	085	942101-7	SPRING WASHER 5	100
033	451037-4	SWITCH BUTTON	90	086	931202-6	HEX. NUT M5	70
034	451017-0	COVER HOLDER	90	087	285847-5	BEARING RETAINER 14-23	290
035	265995-6	TAPPING SCREW 4X18	40	088	158957-0	BEARING BOX COMPLETE	440
036	451199-8	LEAD COVER	110	089	211236-8	BALL BEARING 6002DDW	550
037	231928-3	RING SPRING 8	40	090	325644-8	SPINDLE	310
038	256633-1	PIN 6	110	091	285732-2	BEARING RETAINER 51	90
039	231240-1	COMPRESSION SPRING 7	20	092	265034-2	COUNTERSUNK HEAD SCREW M5X16	60
040	911113-1	PAN HEAD SCREW M4X10	30	093	224431-1	INNER FLANGE 53	270
041	262001-8	URETHANE RING 5	150	094	224432-9	OUTER FLANGE 53	290
042	265717-4	SCREW M6X43	180	095	265405-3	HEX. FRANGE HEAD BOLT M10X20	190
043	266488-6	HEX SOCKET HEAD BOLT M8X20	90	096	158959-6	SAFETY COVER A COMPLETE	610
044	922332-4	HEX. SOCKET HEAD BOLT M6X20	50	097	233554-4	TORSION SPRING 45	90
045	687042-7	STRAIN RELIEF	80	098	424190-9	CUSHION	50
046	266026-4	TAPPING SCREW BIND CT 4X12	30	099	265985-9	HEX.SOCKET HEAD BOLT M6	150
047	419277-0	DUST NOZZLE	190	100	346048-1	CENTER COVER	290
048	213460-9	O RING 35	50	101	253932-2	WAVE WASHER 10	30
049	266321-2	H.S.SET SCREW(FLAT POINT)M6X16	50	102	344539-6	CENTER WASHER	210
050	922331-6	HEX. SOCKET HEAD BOLT M6X20	90	103	346047-3	CENTER PLATE	130
051	253804-1	FLAT WASHER 6	40	104	266034-5	TAPPING SCREW CT 4X16	50
052	257163-5	RING 6	140	105	266020-6	TAPPING SCREW 4X12	50
053	140164-9	LINK PLATE COMPLETE	500	106	941051-3	FLAT WASHER 4	20
054	257163-5	RING 6	140	107	424193-3	ROLLER	90
055	253804-1	FLAT WASHER 6	40	108	451197-2	SAFETY COVER B	1,120
056	961018-5	STOP RING E-5	50	109	266026-4	TAPPING SCREW BIND CT 4X12	30

SERVICE DRAWING

MODEL NO. LS1216/LS1216L

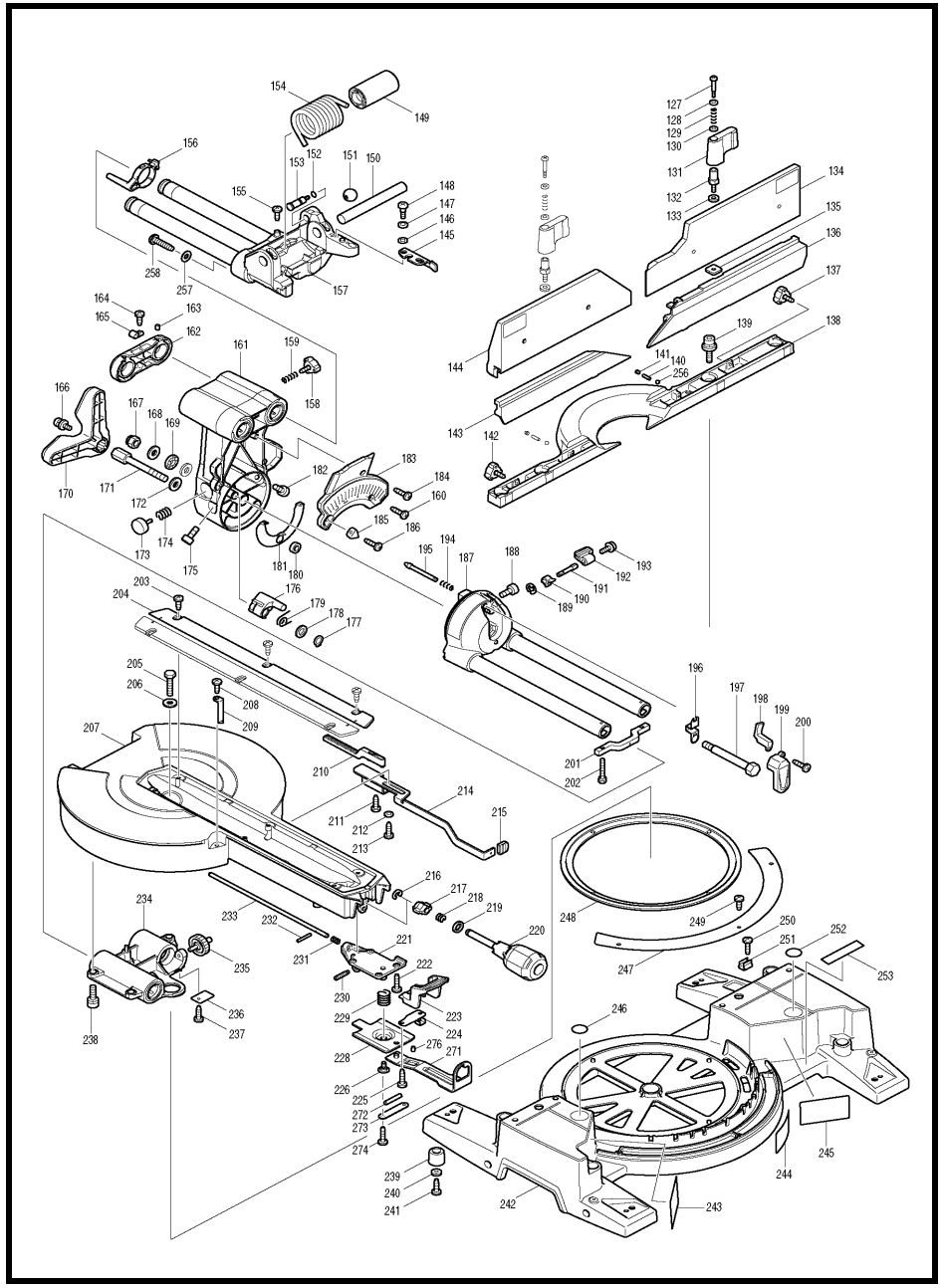

MODEL LS1216/LS1216L

ITEM	PARTS ID	DESCRIPTION	PRICE/BAHT	ITEM	PARTS ID	DESCRIPTION	PRICE/BAHT
122	451196-4	BLADE CASE COVER	190	177	961052-5	RETAINING RING S-12	40
123	266034-5	TAPPING SCREW CT 4X16	50	178	253744-3	FLAT WASHER 12	50
124	451038-2	PROTECTOR	90	179	231646-3	TORSION SPRING 14	100
127	265026-1	+ PAN HEAD SCREW M4	170	180	262158-5	RUBBER RING 9	50
128	941102-2	FLAT WASHER 5	30	181	346071-6	PLATE	110
129	233267-7	COMPRESSION SPRING 7	100	182	266488-6	HEX SOCKET HEAD BOLT M8X20	90
130	941102-2	FLAT WASHER 5	30	183	451200-9	ARM COVER	270
131	272261-4	LEVER 45	110	184	266034-5	TAPPING SCREW CT 4X16	50
132	325651-1	JOINT	160	185	343678-9	POINTER	130
133	253804-1	FLAT WASHER 6	40	186	266034-5	TAPPING SCREW CT 4X16	50
134	140160-7	UPPER FENCE R COMPLETE	1,460	187	158964-3	ARM HOLDER COMPLETE	2,370
135	346058-8	GUIDE PLATE	90	188	266488-6	HEX SOCKET HEAD BOLT M8X20	90
136	318476-0	LOWER FENCE R	1,060	189	961011-9	STOP RING E-4	20
137	265783-1	THUMB SCREW M6X18	90	190	451044-7	CAM	50
138	318411-8	GUIDE FENCE	2,090	191	325656-1	ROD 6	110
139	922443-5	H.S.H.BOLT M8X25 WITH WR	90	192	272262-2	LEVER 22	90
140	256226-4	PIN 4	50	193	911113-1	PAN HEAD SCREW M4X10	30
141	266264-8	H.S.SET SCREW(FLAT POINT)M5X6	80	194	234122-6	COMPRESSION SPRING 6	50
142	265783-1	THUMB SCREW M6X18	90	195	325865-2	LOCK PIN 8	110
143	318863-3	LOWER FENCE L	1,110	196	232250-1	LEAF SPRING	90
144	140156-8	UPPER FENCE L COMPLETE	1,260	197	325646-4	CENTER SHAFT	180
145	346049-9	STOPPER ARM	150	198	451039-0	POSITION PLATE	130
146	253948-7	WAVE WASHER 8	60	199	451070-6	ARM HOLDER COVER	90
147	253835-0	FLAT WASHER 8	60	200	266034-5	TAPPING SCREW CT 4X16	50
148	251267-5	+ PAN HEAD SCREW M6	90	201	158967-7	SQUARE ROD COMPLETE	230
149	451202-5	SLEEVE 17	190	202	925251-3	HEX.BOLT M5X30	60
150	323740-6	ROD 16	290	203	266026-4	TAPPING SCREW BIND CT 4X12	30
151	271601-3	KNOB 20	90	204	451201-7	KERF BOARD	310
152	213011-8	O RING 7	20	205	265585-5	HEX BOLT M8X45	90
153	322629-5	STOPPER PIN	230	206	253762-1	FLAT WASHER 8	130
154	233542-1	TORSION SPRING 40	900	207	140166-5	TURN BASE COMPLETE	4,460
155	266026-4	TAPPING SCREW BIND CT 4X12	30	208	266026-4	TAPPING SCREW BIND CT 4X12	30
156	158962-7	STOPPER LEVER COMPETE	90	209	451009-9	INDICATION PLATE	50
157	140976-0	FRONT ARM COMPLETE	3,640	210	451011-2	RACK BLOCK	110
158	265783-1	THUMB SCREW M6X18	90	211	266385-6	TAPPING SCREW 4X14	70
159	231240-1	COMPRESSION SPRING 7	20	212	941051-3	FLAT WASHER 4	20
160	266034-5	TAPPING SCREW CT 4X16	50	213	266026-4	TAPPING SCREW BIND CT 4X12	30
161	140155-0	ARM COMPLETE	5,810	214	346052-0	SLIDE LOCK PLATE	380
162	318403-7	HOLDER	570	215	286275-7	CAP	50
163	266208-8	H.S.SET SCREW(CUP POINT)M6X8	110	216	961013-5	STOP RING E-7	20
164	266026-4	TAPPING SCREW BIND CT 4X12	30	217	313165-2	CAM	250
165	687042-7	STRAIN RELIEF	80	218	231131-6	COMPRESSION SPRING 11	30
166	911113-1	PAN HEAD SCREW M4X10	30	219	267047-9	FLAT WASHER 10	50
167	252130-5	HEX. LOCK NUT M10-17	140	220	273666-1	GRIP 50	310
168	253024-7	FLAT WASHER 10	70	221	318410-0	PIN HOLDER	330
169	216413-7	THRUST NEEDLE CAGE 1024	180	222	266034-5	TAPPING SCREW CT 4X16	50
170	451019-6	LEVER 105	200	223	451010-4	LOCK LEVER	150
171	265589-7	HEX BOLT M10	230	224	345272-3	LOCK LEVER PLATE	160
172	253024-7	FLAT WASHER 10	70	225	266034-5	TAPPING SCREW CT 4X16	50
173	415208-7	RELEASE BUTTON	170	226	266505-2	H.S. BINDING HEAD SCREW M6X14	90
174	233031-6	COMPRESSION SPRING 12	110	228	346094-4	MITER LOCK PLATE A	310
175	266488-6	HEX SOCKET HEAD BOLT M8X20	90	229	234104-8	COMPRESSION SPRING 13	50
176	318405-3	STOPPER	230	230	266306-8	SHOULDER SCREW M5	160

SERVICE DRAWING

MODEL LS1216/LS1216L

MODEL NO. LS1216/LS1216L

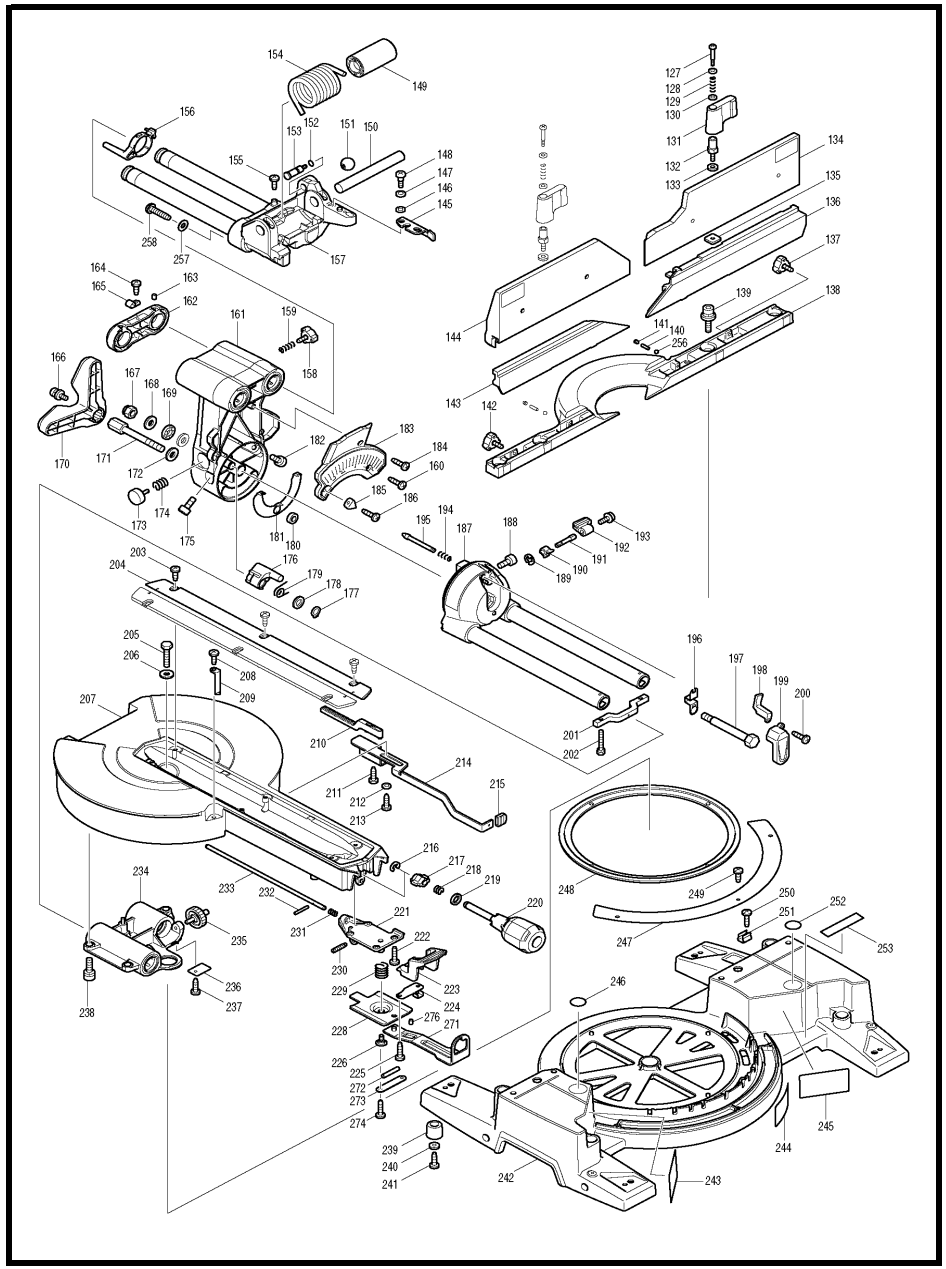

ITEM	PARTS ID	DESCRIPTION	PRICE/BAHT
231	231325-3	COMPRESSION SPRING 6	100
232	256158-5	PIN 3	100
233	325695-1	LOCK PIN 6	130
234	158968-5	LINEAR BEARING BOX COMPLETE	3,630
235	451018-8	SPUR GEAR 43	190
236	232249-6	LEAF SPRING	50
237	266026-4	TAPPING SCREW BIND CT 4X12	30
238	922441-9	HEX. SOCKET HEAD BOLT M8X25	100
239	421845-7	FOOT	90
240	267195-4	FLAT WASHER 4	120
241	266026-4	TAPPING SCREW BIND CT 4X12	30
242	140054-6	BASE COMPLETE	5,460
243	810495-7	CAUTION LABEL	50
246	817283-3	CAUTION LABEL	120
247	816920-6	MITER SCALE PLATE	270
248	451012-0	SLIDE PLATE	150
249	266026-4	TAPPING SCREW BIND CT 4X12	30
250	266034-5	TAPPING SCREW CT 4X16	50
251	232075-3	LEAF SPRING	140
252	817283-3	CAUTION LABEL	120
254	257785-1	SLEEVE 6	90
255	922226-3	HEX. SOCKET HEAD BOLT M5X18	80
256	216024-8	STEEL BALL 4	20
257	253874-0	FLAT WASHER 4	60
258	266042-6	TAPPING SCREW BIND CT 4X20	50
271	140165-7	MITER LOCK PLATE B COMPLETE	350
272	256246-8	PIN 6	90
273	346096-0	PLATE	50
274	266034-5	TAPPING SCREW CT 4X16	50
275	942151-2	SPRING WASHER 6	100
276	266318-1	H.S.SET SCREW(FLAT POINT)M4X6	2,930
A01	122852-0	DUST BAG ASS'Y	310
A02	122854-6	VISE ASS'Y	1,290
A03	762001-3	TRIANGULAR RULE	120
A04	783208-8	HEX. WRENCH 2.5 (LS1216L)	80
A04	265786-5	SCREW M5X16 (LS1216)	90
A05	265786-5	SCREW M5X16 (LS1216L)	90
A05	325673-1	HOLDER 200 (LS1216)	270
A06	325673-1	HOLDER 200 (LS1216L)	270
A06	782232-8	BOX WRENCH 13 (LS1216)	360
E01	257060-5	RING 15.8	140
E02	651941-9	SWITCH V-15-2A5	280

SERVICE DRAWING

MODEL NO. LW1400

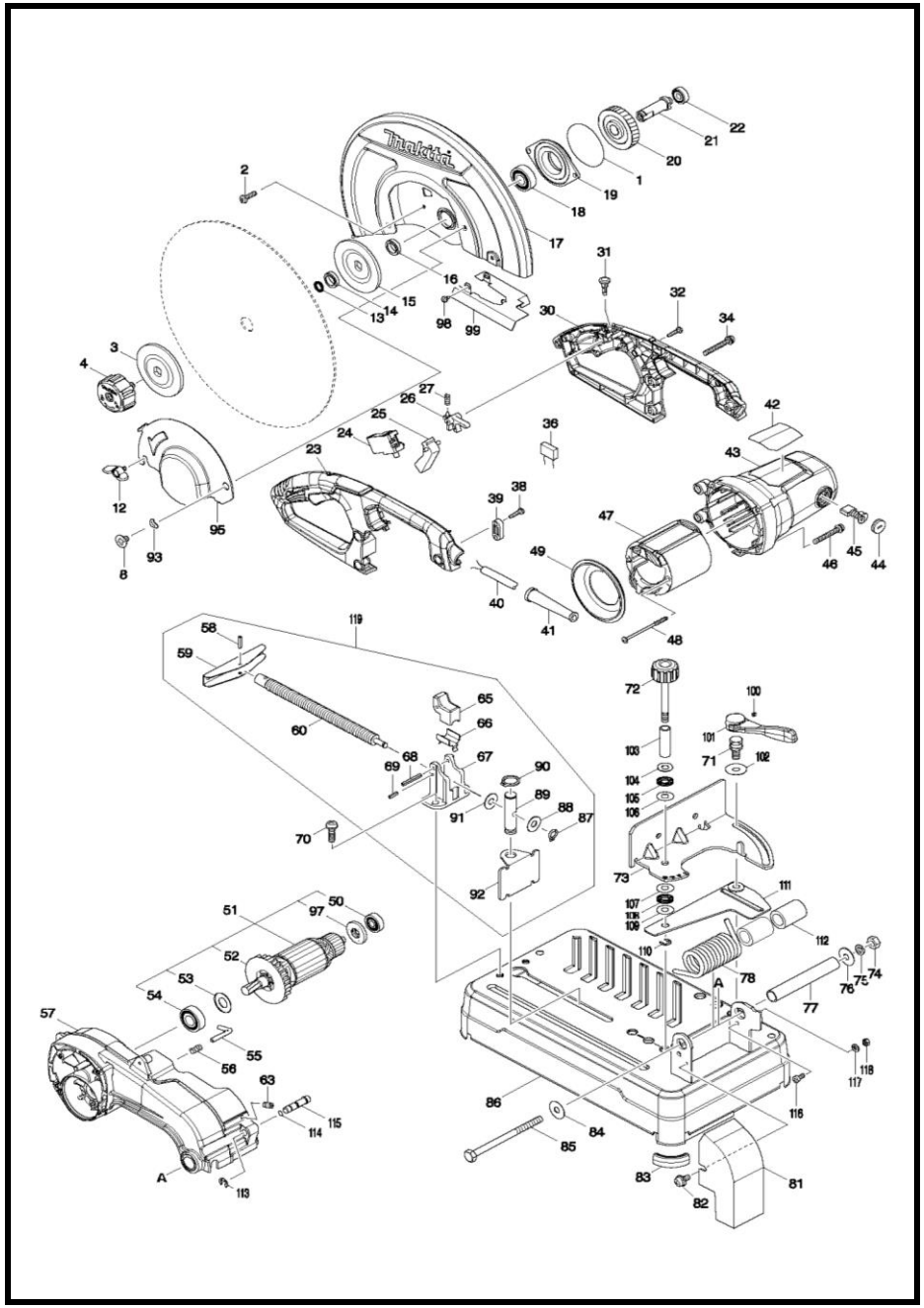

MODEL LW1400

ITEM	PARTS ID	DESCRIPTION	PRICE/BAHT
001	213858-0	O-RING 65	70
002	265122-5	PAN HEAD SCREW M5X20	70
003	224299-5	FLANGE 90	620
004	123478-1	TOOLLESSBOLT ASSEMBLY	1,150
008	265121-7	+ FLAT HEAD SCREW M6	90
012	265754-8	THUMB SCREW M6X12	60
013	213180-5	O RING 14	70
014	257255-0	RING 17	70
015	224299-5	FLANGE 90	620
016	257255-0	RING 17	70
017	161400-0	SAFETY COVER	1,820
018	211282-1	BALL BEARING 6203ZZ	180
019	319393-7	BEARING BOX	270
020	227811-0	HELICAL GEAR 50	720
021	324321-9	SPINDLE	290
022	210067-2	BALL BEARING 6000ZZ	150
023	183C14-3	HANDLE SET	770
024	650716-3	SWITCH TGC31B	570
025	418141-2	SWITCH LEVER	70
026	418139-9	SWITCH LOCK	60
027	231397-8	COMPRESSION SPRING 4	50
030	183C14-3	HANDLE SET	770
031	411478-6	SWITCH BUTTON	120
032	266326-2	TAPPING SCREW 4X18	30
034	265104-7	PAN HEAD SCREW M5X40	100
038	266326-2	TAPPING SCREW 4X18	30
039	687140-7	STRAIN RELIEF	40
040	691237-6	POWER SUPPLY CORD 1.25-2-3.0	
041	682574-9	CORD GUARD 10-90	90
042	851S34-8	LW1400 NAME PLATE	
043	643712-8	BRUSH HOLDER	610
043	143463-8	MOTOR HOUSING COMPLETE	1,190
044	643700-5	BRUSH HOLDER CAP 7-18	110
045	B-80341	CARBON BRUSH SET CB-203A	
046	265104-7	PAN HEAD SCREW M5X40	100
047	654502-4	CONNECTOR P-2	
047	654197-3	RING TERMINAL	80
047	593908-0	FIELD ASS'Y 220V	
048	265A13-6	TAPPING SCREW 5X85	50
049	418143-8	BAFFLE PLATE	110
050	210070-3	BALL BEARING 6200ZZ	180
051	513463-6	ARMATURE ASS'Y 220-240V	
052	240164-0	FAN 80	
053	267714-6	WASHER 15	120
054	211240-7	BALL BEARING 6200ZZ	180
055	324322-7	STOPPER	110
056	233372-0	COMPRESSION SPRING 7	70
057	263029-9	RUBBER PIN 6	
057	143464-6	GEAR HOUSING COMPLETE	2,570
058	951163-4	SPRING PIN 5-20	50
059	272027-2	HANDLE 120	130
060	324323-5	VISE SCREW	360
063	251961-9	H.S.SET SCREW(FLAT POINT)M6X10	40

ITEM	PARTS ID	DESCRIPTION	PRICE/BAHT
065	313114-9	VISE NUT	250
066	345311-9	PLATE	110
067	317662-0	SCREW GUIDE	250
068	951175-7	SPRING PIN 5-36	80
069	951110-5	SPRING PIN 4-16	30
070	265125-9	PAN HEAD SCREW M8X30	70
071	266996-7	COLLAR BOLT M10X20	210
072	271331-6	KNOB 40	230
073	346970-2	GUIDE PLATE	650
074	252183-4	HEX.NUT M10-17	70
075	942251-8	SPRING WASHER 10	50
076	253197-6	FLAT WASHER 10	120
077	331648-0	PIPE 20-128	170
078	233633-8	TORSION SPRING 33	370
081	161399-9	SPARK GUARD	360
082	265144-5	PAN HEAD SCREW M6X12	100
083	421834-2	CUSHION	90
084	253197-6	FLAT WASHER 10	120
085	265509-1	HEX.BOLT M10X140	130
086	161397-3	BASE	3,320
087	961004-6	RETAINING RING S-8	20
088	267257-8	FLAT WASHER 8	70
089	256545-8	PIN 16	200
090	961056-7	RETAINING RING S-16	40
091	267257-8	FLAT WASHER 8	70
092	346636-4	VISE PLATE	370
093	253903-9	WAVE WASHER 6	90
095	346969-7	CENTER CAP	470
097	681630-2	INSULATION WASHER	150
098	911103-4	PAN HEAD SCREW M4X6	30
099	346971-0	SPARK COVER	140
100	266264-8	H.S.SET SCREW(FLAT POINT)M5X6	80
101	272286-8	LEVER 125	540
102	253197-6	FLAT WASHER 10	120
103	257389-9	SLEEVE 11	140
104	253180-3	FLAT WASHER 10	80
105	216413-7	THRUST NEEDLE CAGE 1024	180
106	253353-8	THIN WASHER 10	80
107	253353-8	THIN WASHER 10	80
108	216413-7	THRUST NEEDLE CAGE 1024	180
109	253353-8	THIN WASHER 10	80
110	961014-3	STOP RING E-8	30
111	161402-6	GUIDE BASE	270
112	257390-4	SLEEVE 20	230
113	961014-3	STOP RING E-8	30
114	213011-8	O RING 7	20
115	326624-7	STOPPER PIN	190
116	922312-0	HEX. SOCKET HEAD BOLT M6X12	110
117	942151-2	SPRING WASHER 6	100
118	931302-2	HEX. NUT M6	70
119	135708-8	VISE ASS'Y	

SERVICE DRAWING

MODEL NO. LW1401

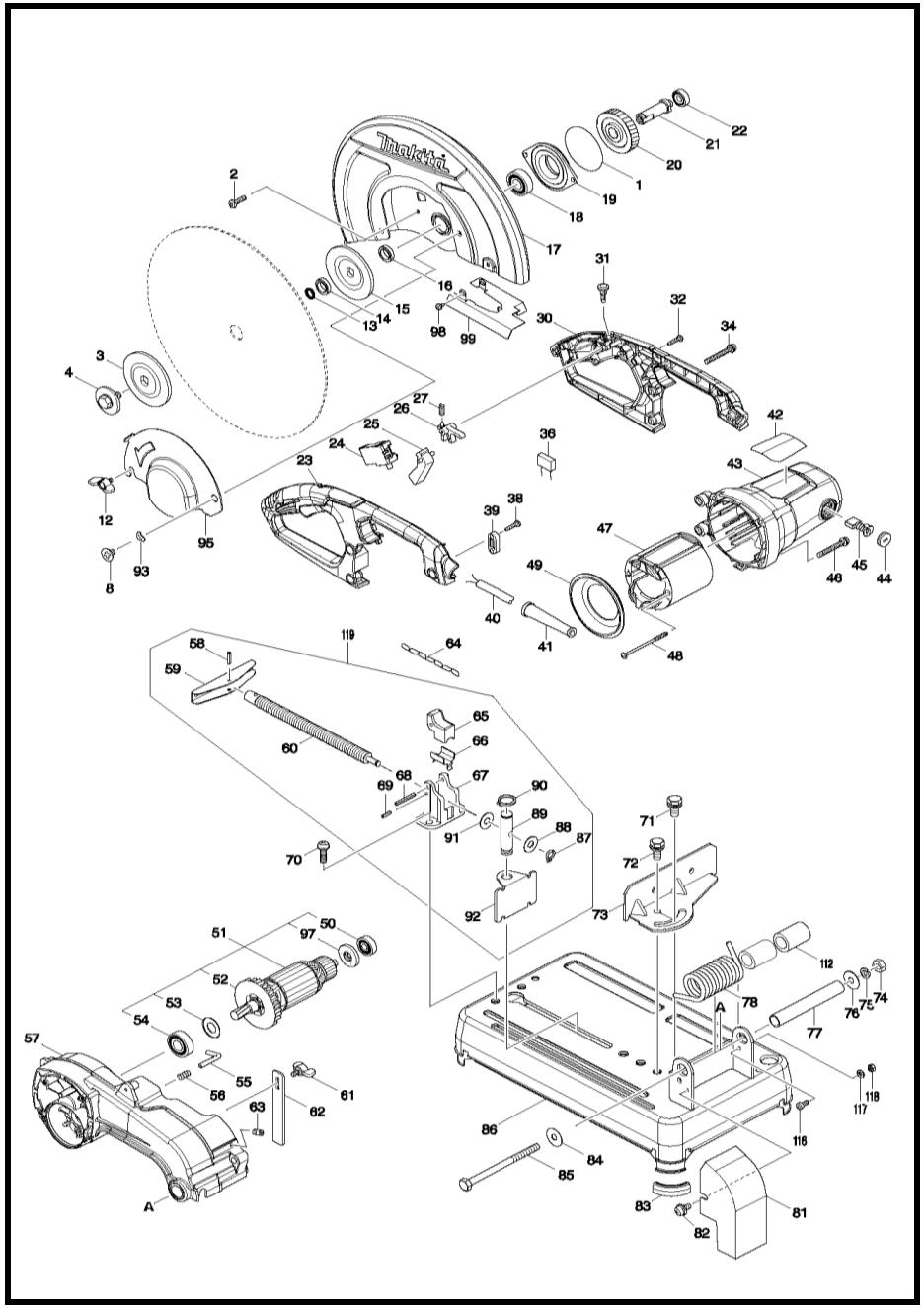

MODEL LW1401

ITEM	PARTS ID	DESCRIPTION	PRICE/BAHT
001	213858-0	O-RING 65	70
002	265122-5	PAN HEAD SCREW M5X20	70
003	224299-5	FLANGE 90	620
004	251680-7	HEX. BOLT M10X25	230
008	265121-7	+ FLAT HEAD SCREW M6	90
012	265754-8	THUMB SCREW M6X12	60
013	213180-5	O RING 14	70
014	257255-0	RING 17	70
015	224299-5	FLANGE 90	620
016	257255-0	RING 17	70
017	161400-0	SAFETY COVER	1,820
018	211282-1	BALL BEARING 6203ZZ	180
019	319393-7	BEARING BOX	270
020	227811-0	HELICAL GEAR 50	720
021	324321-9	SPINDLE	290
022	210067-2	BALL BEARING 6000ZZ	150
023	183C14-3	HANDLE SET	770
024	650716-3	SWITCH TGC31B	570
025	418141-2	SWITCH LEVER	70
026	418139-9	SWITCH LOCK	60
027	231397-8	COMPRESSION SPRING 4	50
028	281216-8	HANGER	70
029	268101-2	PIN 6	70
030	183C14-3	HANDLE SET	770
031	411478-6	SWITCH BUTTON	120
032	266326-2	TAPPING SCREW 4X18	30
034	265104-7	PAN HEAD SCREW M5X40	100
038	266326-2	TAPPING SCREW 4X18	30
039	687140-7	STRAIN RELIEF	40
040	691237-6	POWER SUPPLY CORD 1.25-2-3.0	
041	682574-9	CORD GUARD 10-90	90
042	851S55-0	LW1401 NAME PLATE	
043	643712-8	BRUSH HOLDER	
043	143463-8	MOTOR HOUSING COMPLETE	1,190
044	643700-5	BRUSH HOLDER CAP 7-18	110
045	B-80341	CARBON BRUSH SET CB-203A	
046	265104-7	PAN HEAD SCREW M5X40	100
047	654502-4	CONNECTOR P-2	
047	654197-3	RING TERMINAL	80
047	593908-0	FIELD ASS'Y 220V	
048	265A13-6	TAPPING SCREW 5X85	50
049	418143-8	BAFFLE PLATE	110
050	210070-3	BALL BEARING 6200ZZ	180
051	513463-6	ARMATURE ASS'Y 220-240V	
052	240164-0	FAN 80	
053	267714-6	WASHER 15	120
054	211240-7	BALL BEARING 6200ZZ	180
055	324322-7	STOPPER	110
056	233372-0	COMPRESSION SPRING 7	70
057	263029-9	RUBBER PIN 6	
057	143464-6	GEAR HOUSING COMPLETE	2,570
058	951163-4	SPRING PIN 5-20	50
059	272027-2	HANDLE 120	130
060	324323-5	VISE SCREW	360
061	265754-8	THUMB SCREW M6X12	60
062	345310-1	STOPPER PLATE	110
063	251961-9	H.S.SET SCREW(FLAT POINT)M6X10	40
064	282015-1	CHAIN	140
065	313114-9	VISE NUT	250
066	345311-9	PLATE	110
067	317662-0	SCREW GUIDE	250
068	951175-7	SPRING PIN 5-36	80
069	951110-5	SPRING PIN 4-16	30
070	265125-9	PAN HEAD SCREW M8X30	70
071	265508-3	HEX.BOLT M10X25	110
072	265508-3	HEX.BOLT M10X25	110
073	345315-1	GUIDE PLATE	310
074	252183-4	HEX.NUT M10-17	70
075	942251-8	SPRING WASHER 10	50
076	253197-6	FLAT WASHER 10	
077	331648-0	PIPE 20-128	170
078	233633-8	TORSION SPRING 33	370
081	345313-5	SPARK GUARD	130
082	265144-5	PAN HEAD SCREW M6X12	100
083	421834-2	CUSHION	90
084	253197-6	FLAT WASHER 10	
085	265509-1	HEX.BOLT M10X140	130
086	165352-7	BASE	1,870
087	961004-6	RETAINING RING S-8	20
088	267257-8	FLAT WASHER 8	70
089	256474-5	SHOULDER PIN 10-16	180
090	961056-7	RETAINING RING S-16	40
091	267257-8	FLAT WASHER 8	70
092	345312-7	VISE PLATE	170
093	253903-9	WAVE WASHER 6	90
095	346969-7	CENTER CAP	470
097	681630-2	INSULATION WASHER	150
112	257390-4	SLEEVE 20	230
116	922312-0	HEX. SOCKET HEAD BOLT M6X12	110
117	942151-2	SPRING WASHER 6	100
118	931302-2	HEX. NUT M6	70
119	135509-4	VISE ASS'Y	1,440
A01	A-89545	CUTTING WHEEL 14"	
A02	782210-8	SOCKET WRENCH 17	220

SERVICE DRAWING

MODEL NO. MLT100/MLT100S

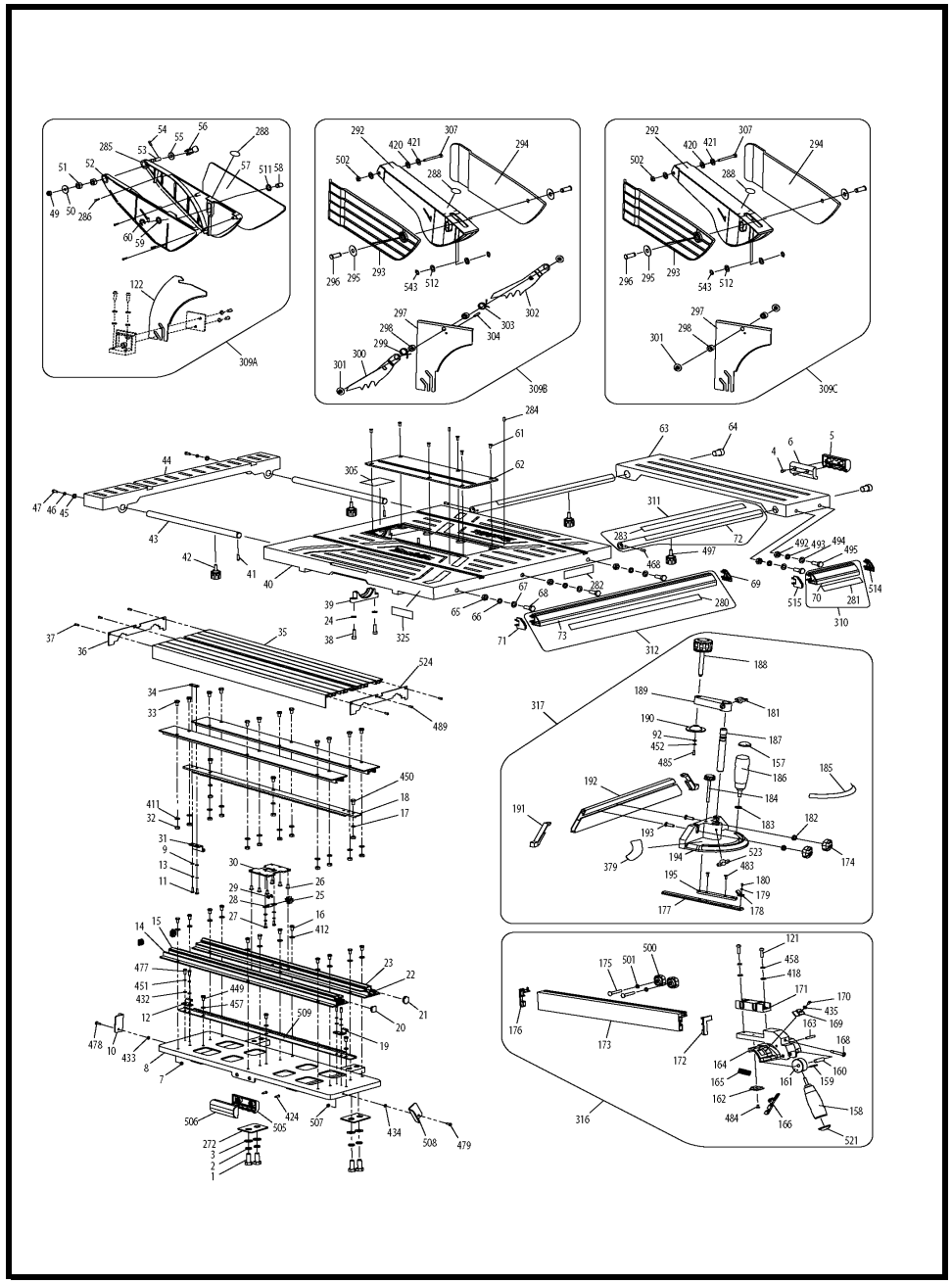

MODEL MLT100/MLT100S

ITEM	PARTS ID	DESCRIPTION	PRICE/BAHT
001	JM27000001	HEX.BOLT M10X35	100
002	JM27000002	SPRING WASHER 10	50
003	JM27000003	FLAT WASHER 10	50
004	JM27000004	CROSS HEAD SELF TAPPING SCREW	50
005	JM27000005	EXTERIOR HALF HANDLE	190
006	JM27000006	INTERIOR HALF HANDLE	190
007	JM27000007	HEX.LOCK NUT M4	50
008	JM27000008	BOTTOM	2,840
009	JM27000009	FLAT WASHER 4	50
010	JM27000010	LIMITED BRACKET	120
011	JM27000011	CROSS HEAD SCREW M4X12	50
012	JM27000012	FIX BRACKET B	80
013	JM27000013	SPRING WASHER 4	50
014	JM27000014	FIX FLAT RAIL	1,470
015	JM27000015	SLIDING FLAT RAIL	550
016	JM27000016	CROSS HEAD SCREW M6X10	50
017	JM27000024	FLAT WASHER 6	50
018	JM27000018	SLIDING TABLE RACK RAIL	230
019	JM27000019	FIX BRACKET B	80
020	JM27000020	SLIDING FLAT RAIL COVER	80
021	JM27000021	SLIDING RAIL COVER	80
022	JM27000022	FIX RAIL I	670
023	JM27000023	SLIDING RAIL	1,770
024	JM27000024	FLAT WASHER 6	50
025	JM27000025	GEAR	250
026	JM27000026	RIVET 5X9	50
027	JM27000027	CROSS HEAD SCREW M4X10	50
028	JM27000028	SHAFT	120
029	JM27000029	RETAINING RING 6	120
030	JM27000030	SLIDING LIMITED PLATE	120
031	JM27000031	GEAR LIMITED C	290
032	JM27000032	HEX. NUT M6	50
033	JM27000033	HEX BOLT M6X10	50
034	JM27000034	CONNECTION NUT	80
035	JM27000035	SLIDING TABLE	3,400
036	JM27000036	SLIDING TABLE COVER	510
037	JM27000037	SELF TAPPING SCREW ST3.9X8	50
038	JM27000038	CROSS HEAD SCREW M6X16	50
039	JM27000039	FIX BRACKET A	170
040	JM27000430	MAIN TABLE A	9,300
041	JM27000042	CROSS HEAD SCREW M5X10	50
042	JM27000043	LOCK KNOB	170
043	JM27000044	SLIDING BAR B	1,190
044	JM27000046	REAR EXTENSION TABLE ASSEMBLY	2,060
045	JM27000047	BIG FLAT WASHER 5	50
046	JM27000048	SPRING WASHER 5	50
047	JM27000049	CROSS HEAD SCREW M5X14	50
049	JM27000051	LOCK NUT M6	50
050	JM27000055	WASHER	50
051	JM27000056	FIX PLATE	120
052	JM27000057	LEFT GUARD	700
053	JM27000058	CONNECTION BOLT	120
054	JM27000059	PIN 4X8	80
055	JM27000060	WASHER	50
056	JM27000061	WRENCH	170
057	JM27000062	SIDE PROTECTION PLATE	550
058	JM27000063	PIN	120
059	JM27000064	WASHER A	50
060	JM27000065	RING 10	120
061	JM27000066	CROSS HEAD SUNK SCREW M4X8	50
062	JM27000067	TABLE INSERT	430
063	JM27000068	RIGHT EXTENSION TABLE	920
064	JM27000069	H.S.BOLT M14X20	150
065	JM27000070	HEX NUT M8	50
066	JM27000071	SPRING WASHER 8	50
067	JM27000072	FLAT WASHER 8	50
068	JM27000073	SQUARE NECK BOLT M8X25	120
069	JM27000074	COVER A	80
070	JM27000075	SUB FRONT RAIL	370
071	JM27000078	COVER B	80
072	JM27000425	SLIDING BAR A	920
073	JM27000082	FRONT RAIL	1,600

SERVICE DRAWING

MODEL NO. MLT100/MLT100S

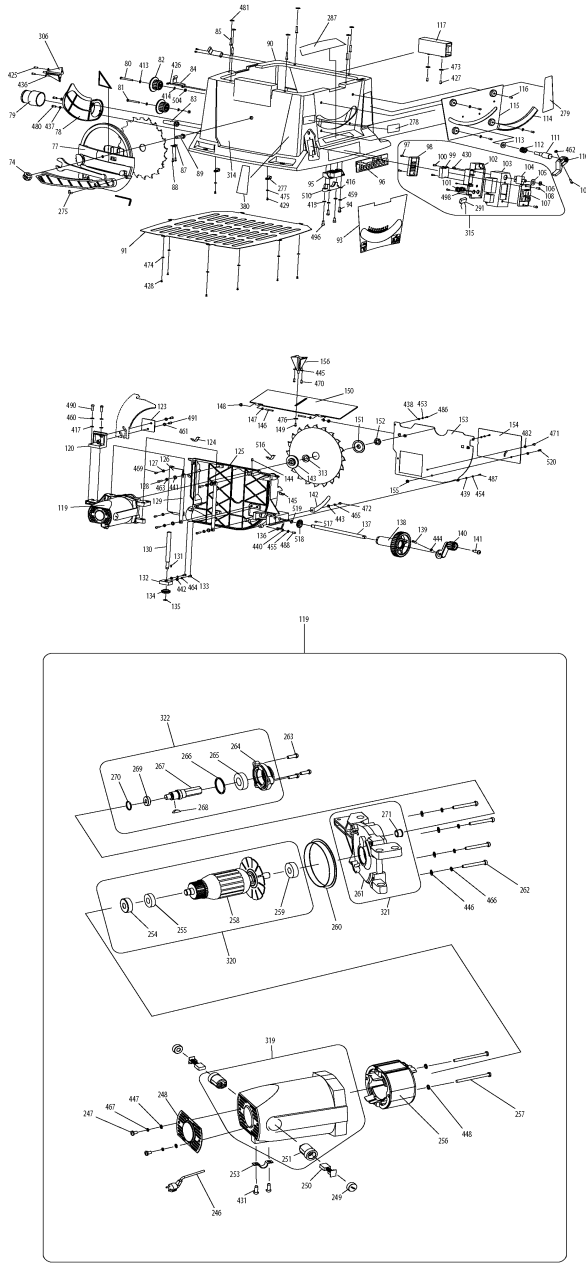

MODEL MLT100/MLT100S

ITEM	PARTS ID	DESCRIPTION	PRICE/BAHT	ITEM	PARTS ID	DESCRIPTION	PRICE/BAHT
074	JM27000085	LOCK KNOB A	190	132	JM27000160	ADJUSTING BRACKET	290
077	JM27000088	FIX PLATE	550	133	JM27000161	H.S.BOLT M5X20	50
078	JM27000089	PROTECTION PLATE	290	134	JM27000162	BEVEL GEAR	160
079	JM27000090	DUST PORT	120	135	JM27000163	RETAINING RING 10	50
080	JM27000091	HEX.BOLT M5X65	80	136	JM27000164	POINTER	80
081	JM27000092	HEX.BOLT M5X55	80	137	JM27000165	ROD	250
082	JM27000093	CORD BRACKET	170	138	JM27000166	WHEEL	320
083	JM27000094	CORD PROTECTION TUBE	120	139	JM27000167	CROSS HEAD SCREW M5X12	50
084	JM27000095	HOOK	120	140	JM27000168	KNOB	170
085	JM27000096	CROSS HEAD SCREW M5X25	80	141	JM27000169	SCREW	80
087	JM27000102	CLAMP PLATE	80	142	JM27000170	PROTECTION PLATE	80
088	JM27000103	CROSS HEAD SELF TAPPING SCREW	50	143	JM27000171	INNER FLANGE	190
089	JM27000104	HEX.BOLT M10X45	100	144	JM27000172	H.S.BOLT WITH GLUE M6X12	120
090	JM27000105	CABINET	4,820	145	JM27000173	PLATE	50
091	JM27000108	BOTTOM	1,470	146	JM27000174	CROSS HEAD SCREW M3X25	50
092	JM27000109	BIG FLAT WASHER 4	50	147	JM27000175	BIG WASHER 3	50
093	JM27000110	FRONT PANEL LABEL	230	148	JM27000176	HEX LOCK NUT M3	50
094	JM27000111	HEX BOLT M6X16	50	149	JM27000177	SELF TAPPING SCREW ST3.9X10	50
095	JM27000112	BRACKET B	360	150	JM27000178	PROTECTION PLATE	430
096	JM27000113	LOGO LABEL	370	151	JM27000179	OUTER FLANGE	190
097	JM27000114	CROSS HEAD SELF TAPPING SCREW	50	152	JM27000180	NUT M16	80
098	JM27000115	SOFT START DEVICE COVER	120	153	JM27000181	PROTECTION PLATE	550
100	JM27000117	CROSS HEAD SELF TAPPING SCREW	50	154	JM27000182	PLATE	250
101	JM27000118	STRAIN & RELIEF	80	155	JM27000183	NUT M5	50
102	JM27000119	SWITCH COVER	80	156	JM27000184	SUPPORT BRACKET	120
103	JM27000120	SWITCH BOX	430	157	JM27000185	COVER	80
104	JM27000121	OVERLOAD SWITCH	360	158	JM27000186	HANDLE	250
105	JM27000122	OVERLOAD SWITCH LABEL	50	159	JM27000187	PIN 3X30	80
106	JM27000123	OVERLOAD SWITCH NUT	50	160	JM27000188	PIN	250
107	JM27000443	MAGNETIC SWITCH A (HV)		161	JM27000189	ECCENTRIC WHEEL	250
108	JM27000136	CROSS HEAD SCREW M4X14		162	JM27000190	FRICTION PAD	80
109	JM27000137	HEX.NUT M6X12	80	163	JM27000191	PIN	250
110	JM27000138	LOCK HANDLE	120	164	JM27000192	BRACKET	550
111	JM27000139	LOCK BOLT	320	165	JM27000193	PRESSION SPRING	120
112	JM27000140	TORSION SPRING	170	166	JM27000194	PAW	80
113	JM27000141	BUSH	80	168	JM27000196	SCREW	120
114	JM27000142	RACK BRACKET	230	169	JM27000197	POINTER	80
115	JM27000143	SUPPORT PLATE	470	170	JM27000198	CROSS HEAD SCREW M4X8	50
116	JM27000144	CROSS HEAD SUNK SCREW M5X8	50	171	JM27000199	BRACKET	370
117	JM27000145	TUBE	230	172	JM27000200	INSERT	80
119	JM27000147	MOTOR(230V)	13,660	173	JM27000201	RIP FENCE	670
120	JM27000148	BRACKET	250	174	JM27000203	LOCK NUT	120
121	JM27000149	H.S.BOLT M6X20	80	175	JM27000204	SQUARE NECK BOLT M6X60	80
122	JM27000150	RIVING KNIF	290	176	JM27000205	INSERT	80
123	JM27000151	FIX PLATE	170	176	JM27000195	LOCK PLATE	80
124	JM27000152	SLIDING PLATE	50	177	JM27000206	SLIDING BAR	290
125	JM27000153	FRAME	2,650	178	JM27000207	POINTER	80
126	JM27000154	COVER	230	179	JM27000208	FLAT WASHER 3	50
127	JM27000155	FLAT WASHER 5	50	180	JM27000209	CROSS HEAD SCREW M3X8	50
128	JM27000156	CROSS HEAD SCREW M5X20	50	181	JM27000210	WING NUT	120
129	JM27000157	BAR	290	182	JM27000211	BIG WASHER 6	50
130	JM27000158	ROD	250	183	JM27000212	WASHER	50
131	JM27000159	KEY 4X8	50	184	JM27000213	LOCK KNOB	120

SERVICE DRAWING

MODEL NO. MLT100/MLT100S

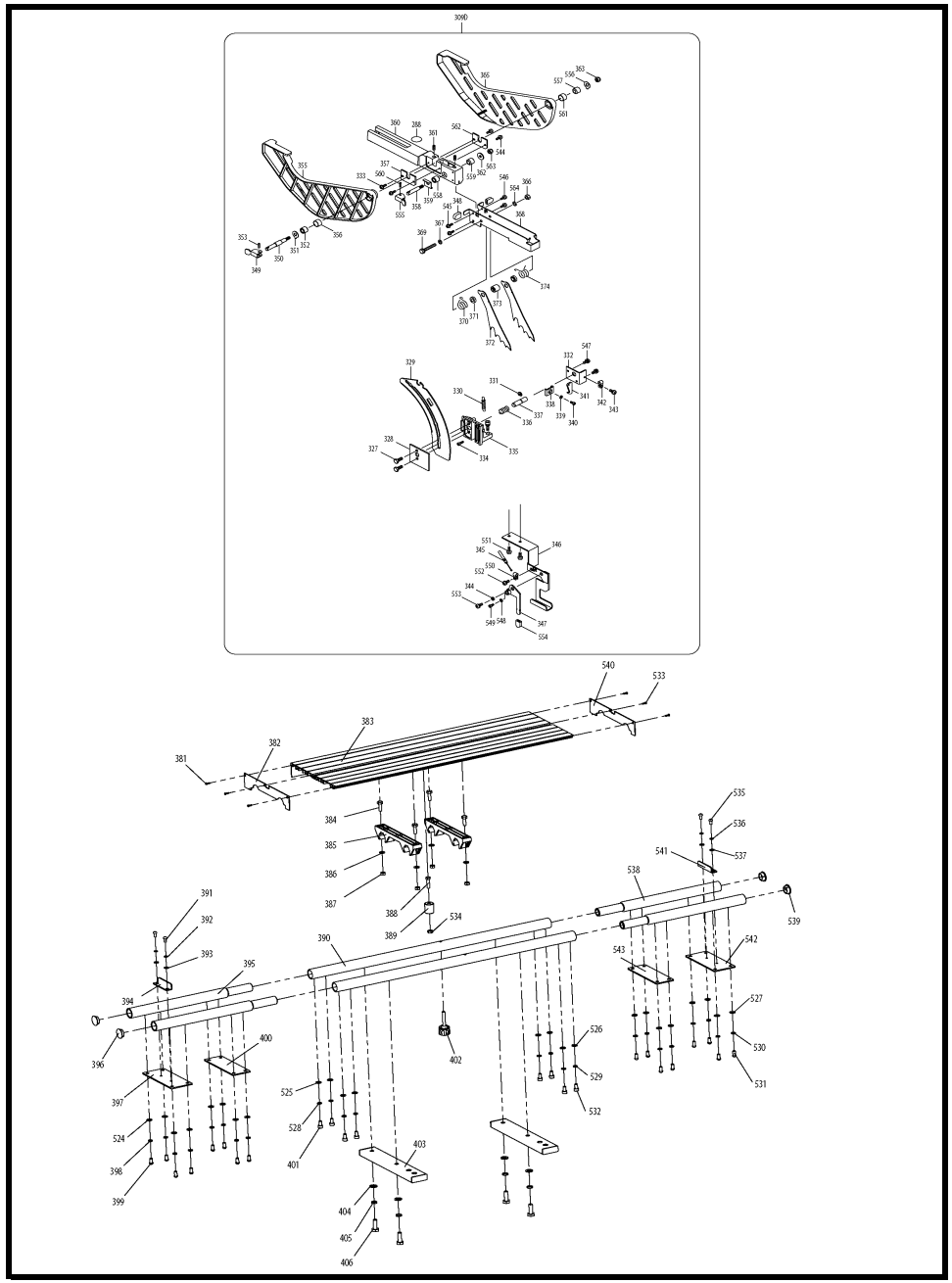

MODEL MLT100/MLT100S

ITEM	PARTS ID	DESCRIPTION	PRICE/BAHT	ITEM	PARTS ID	DESCRIPTION	PRICE/BAHT
185	JM27000214	SCALE LABEL	120	314	JM27000106	CABINET ASSEMBLY(A)	5,290
186	JM27000215	HANDLE	190	315	JM27000130	SWITCH ASSY 4 SWA SOX CAX	1,560
187	JM27000216	PIN	230	316	JM27000202	RIP FENCE ASSEMBLY	2,540
188	JM27000217	THREAD ROD	370	317	JM27000224	MITER GUAGE ASSEMBLY	2,710
189	JM27000218	LINK	320	319	JM27000298	MOTOR HOUSE ASSEMBLY	1,690
190	JM27000219	PLATE	80	320	JM27000309	ROTOR(230V)ASSEMBLY	6,020
191	JM27000220	INSERT	80	321	JM27000424	GEAR BOX ASSEMBLY	
192	JM27000221	FENCE	430	322	JM27000322	OUTER SHAFT ASSEMBLY	1,830
193	JM27000222	SQUARE NECK BOLT M6X30	80	411	JM27000024	FLAT WASHER 6	50
194	JM27000223	MITER GUAGE	830	412	JM27000024	FLAT WASHER 6	50
195	JM27000225	PAD	230	413	JM27000024	FLAT WASHER 6	50
246	JM23000154	POWER SUPPLY CORD		414	JM27000024	FLAT WASHER 6	50
247	JM27000292	CROSS HEAD SCREW M5X8	50	415	JM27000024	FLAT WASHER 6	50
248	JM27000293	COVER	100	416	JM27000024	FLAT WASHER 6	50
249	JM27000294	BRUSH COVER	50	417	JM27000024	FLAT WASHER 6	50
250	JM23000123	CARBON BRUSH		418	JM27000024	FLAT WASHER 6	50
251	JM27000296	BRUSH HOLDER	170	424	JM27000004	CROSS HEAD SELF TAPPING SCREW	50
253	JM27000299	CLAMP PLATE	50	426	JM27000004	CROSS HEAD SELF TAPPING SCREW	50
254	JM27000361	ABSORB RING	50	427	JM27000004	CROSS HEAD SELF TAPPING SCREW	50
255	JM27000445	BEARING 6001DDW		428	JM27000004	CROSS HEAD SELF TAPPING SCREW	50
256	JM27000302	STATOR(230V)	5,010	429	JM27000004	CROSS HEAD SELF TAPPING SCREW	50
257	JM27000305	CROSS HEAD SELF TAPPING SCREW	50	430	JM27000004	CROSS HEAD SELF TAPPING SCREW	50
258	JM27000306	ROTOR(230V)	5,670	431	JM27000004	CROSS HEAD SELF TAPPING SCREW	50
259	JM27000446	BEARING 6201DDW		432	JM27000009	FLAT WASHER 4	50
260	JM27000313	RING	80	433	JM27000009	FLAT WASHER 4	50
261	JM27000423	GEAR BOX		434	JM27000009	FLAT WASHER 4	50
262	JM27000316	CROSS HEAD SCREW M5X35	80	435	JM27000009	FLAT WASHER 4	50
263	JM27000317	CROSS HEAD SUNK SCREW M5X16	50	437	JM27000009	FLAT WASHER 4	50
264	JM27000318	GEAR COVER	430	438	JM27000009	FLAT WASHER 4	50
265	JM27000319	BEARING 6003-2Z	370	439	JM27000009	FLAT WASHER 4	50
266	JM27000320	RETAINING RING 35	80	440	JM27000009	FLAT WASHER 4	50
267	JM27000321	OUTER SHAFT	370	441	JM27000155	FLAT WASHER 5	50
268	JM27000323	KEY 5X6.5X16	50	442	JM27000155	FLAT WASHER 5	50
269	JM27000324	GEAR	680	443	JM27000155	FLAT WASHER 5	50
270	JM27000325	RETAINING RING 16	80	444	JM27000155	FLAT WASHER 5	50
271	JM27000326	BUSH	230	445	JM27000155	FLAT WASHER 5	50
272	JM27000327	SLIDING TABLE PAD	120	446	JM27000155	FLAT WASHER 5	50
275	JM27000330	HOOK	80	447	JM27000155	FLAT WASHER 5	50
277	JM27000332	CLAMP	80	448	JM27000155	FLAT WASHER 5	50
278	JM27080019	NAME PLATE	120	449	JM27000016	CROSS HEAD SCREW M6X10	50
280	JM27000333	SCALE LABEL	120	450	JM27000033	HEX BOLT M6X10	50
281	JM27000335	SCALE LABEL	120	451	JM27000013	SPRING WASHER 4	50
283	JM27000428	SCALE LABEL		452	JM27000013	SPRING WASHER 4	50
284	JM27000339	H.S.BOLT WITH GLUE M6X20	100	453	JM27000013	SPRING WASHER 4	50
285	JM27000340	BLADE GUARD	510	454	JM27000013	SPRING WASHER 4	50
286	JM27000341	CROSS HEAD SELF TAPPING SCREW	50	455	JM27000013	SPRING WASHER 4	50
287	JM27080020	WARNING LABEL	120	457	JM27000017	SPRING WASHER 6	50
288	JM27080060	WARNING LABEL	120	458	JM27000017	SPRING WASHER 6	50
309	JM27000052	UP BLADE GUARD ASSEMBLY (EU TY	2,290	459	JM27000017	SPRING WASHER 6	50
310	JM27000076	SUB FRONT RAIL ASSEMBLY (MMSCA	430	460	JM27000017	SPRING WASHER 6	50
311	JM27000426	SLIDING BAR A ASSEMBLY (MMSCAL		461	JM27000017	SPRING WASHER 6	50
312	JM27000083	FRONT RAIL ASSEMBLY (MMSCALE)	1,660	462	JM27000032	HEX. NUT M6	50
313	JM27000101	BLADE INNER LING 25.4	120	463	JM27000048	SPRING WASHER 5	50

SERVICE DRAWING

MODEL NO. MLT100/MLT100S

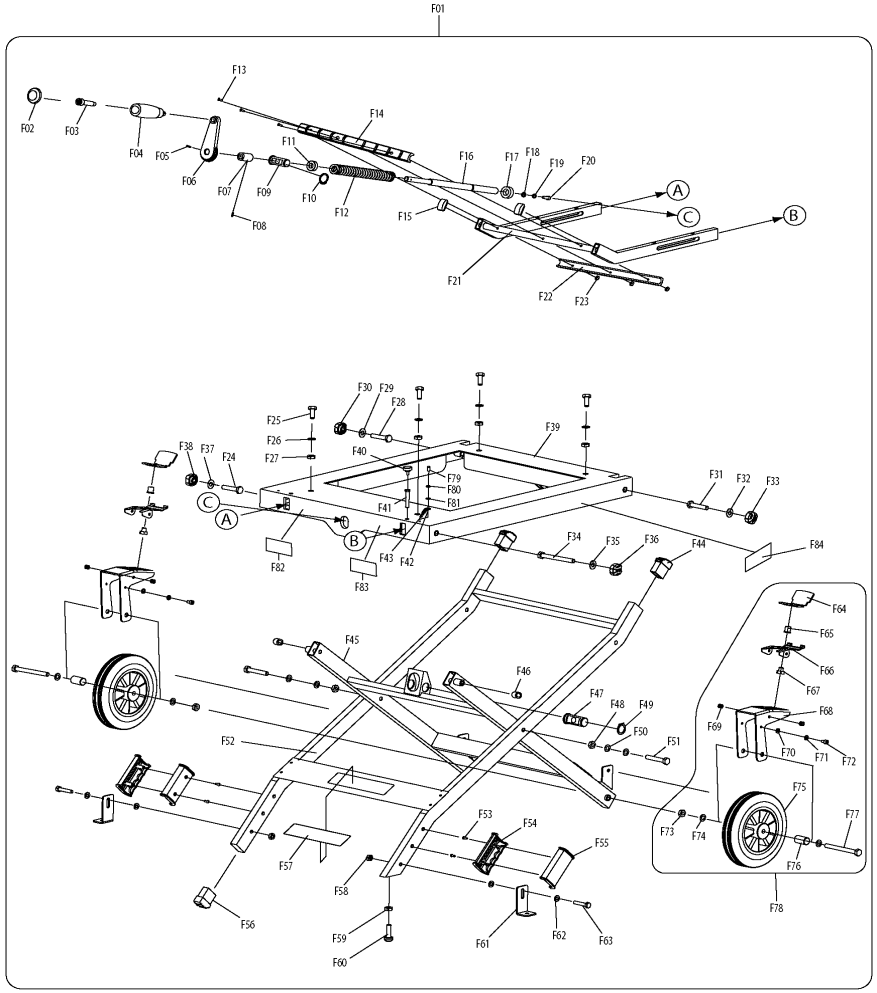

MODEL MLT100/MLT100S

ITEM	PARTS ID	DESCRIPTION	PRICE/BAHT
464	JM27000048	SPRING WASHER 5	50
465	JM27000048	SPRING WASHER 5	50
466	JM27000048	SPRING WASHER 5	50
467	JM27000048	SPRING WASHER 5	50
468	JM27000042	CROSS HEAD SCREW M5X10	50
469	JM27000042	CROSS HEAD SCREW M5X10	50
470	JM27000042	CROSS HEAD SCREW M5X10	50
471	JM27000042	CROSS HEAD SCREW M5X10	50
472	JM27000042	CROSS HEAD SCREW M5X10	50
473	JM27000109	BIG FLAT WASHER 4	50
474	JM27000109	BIG FLAT WASHER 4	50
475	JM27000109	BIG FLAT WASHER 4	50
476	JM27000109	BIG FLAT WASHER 4	50
477	JM27000011	CROSS HEAD SCREW M4X12	50
478	JM27000011	CROSS HEAD SCREW M4X12	50
479	JM27000011	CROSS HEAD SCREW M4X12	50
480	JM27000011	CROSS HEAD SCREW M4X12	50
481	JM27000047	BIG FLAT WASHER 5	50
482	JM27000047	BIG FLAT WASHER 5	50
483	JM27000066	CROSS HEAD SUNK SCREW M4X8	50
484	JM27000066	CROSS HEAD SUNK SCREW M4X8	50
485	JM27000027	CROSS HEAD SCREW M4X10	50
486	JM27000027	CROSS HEAD SCREW M4X10	50
487	JM27000027	CROSS HEAD SCREW M4X10	50
488	JM27000027	CROSS HEAD SCREW M4X10	50
489	JM27000037	SELF TAPPING SCREW ST3.9X8	50
490	JM27000149	H.S.BOLT M6X20	80
491	JM27000149	H.S.BOLT M6X20	80
492	JM27000070	HEX NUT M8	50
493	JM27000071	SPRING WASHER 8	50
494	JM27000072	FLAT WASHER 8	50
495	JM27000073	SQUARE NECK BOLT M8X25	120
496	JM27000038	CROSS HEAD SCREW M6X16	50
497	JM27000043	LOCK KNOB	170
498	JM27000114	CROSS HEAD SELF TAPPING SCREW	50
500	JM27000203	LOCK NUT	120
501	JM27000211	BIG WASHER 6	50
504	JM27000051	LOCK NUT M6	50
505	JM27000005	EXTERIOR HALF HANDLE	190
506	JM27000006	INTERIOR HALF HANDLE	190
507	JM27000007	HEX.LOCK NUT M4	50
508	JM27000010	LIMITED BRACKET	120
509	JM27000018	SLIDING TABLE RACK RAIL	230
510	JM27000039	FIX BRACKET A	170
511	JM27000064	WASHER A	50
514	JM27000074	COVER A	80
515	JM27000078	COVER B	80
516	JM27000152	SLIDING PLATE	50
517	JM27000159	KEY 4X8	50
518	JM27000162	BEVEL GEAR	160
519	JM27000163	RETAINING RING 10	50
520	JM27000167	CROSS HEAD SCREW M5X12	50
521	JM27000185	COVER	80

ITEM	PARTS ID	DESCRIPTION	PRICE/BAHT
523	JM27000210	WING NUT	120
524	JM27000036	SLIDING TABLE COVER	510
A01	JM27000086	PUSH STICK	230
A02	JM27000087	WRENCH B	250
A03	JM27000328	TRIANGLE PLATE	120
A04	JM27000329	WRENCH	120
A05	JM27000098	BLADE 255X25.4	2,770

SERVICE DRAWING

MODEL NO. MUH353G/R

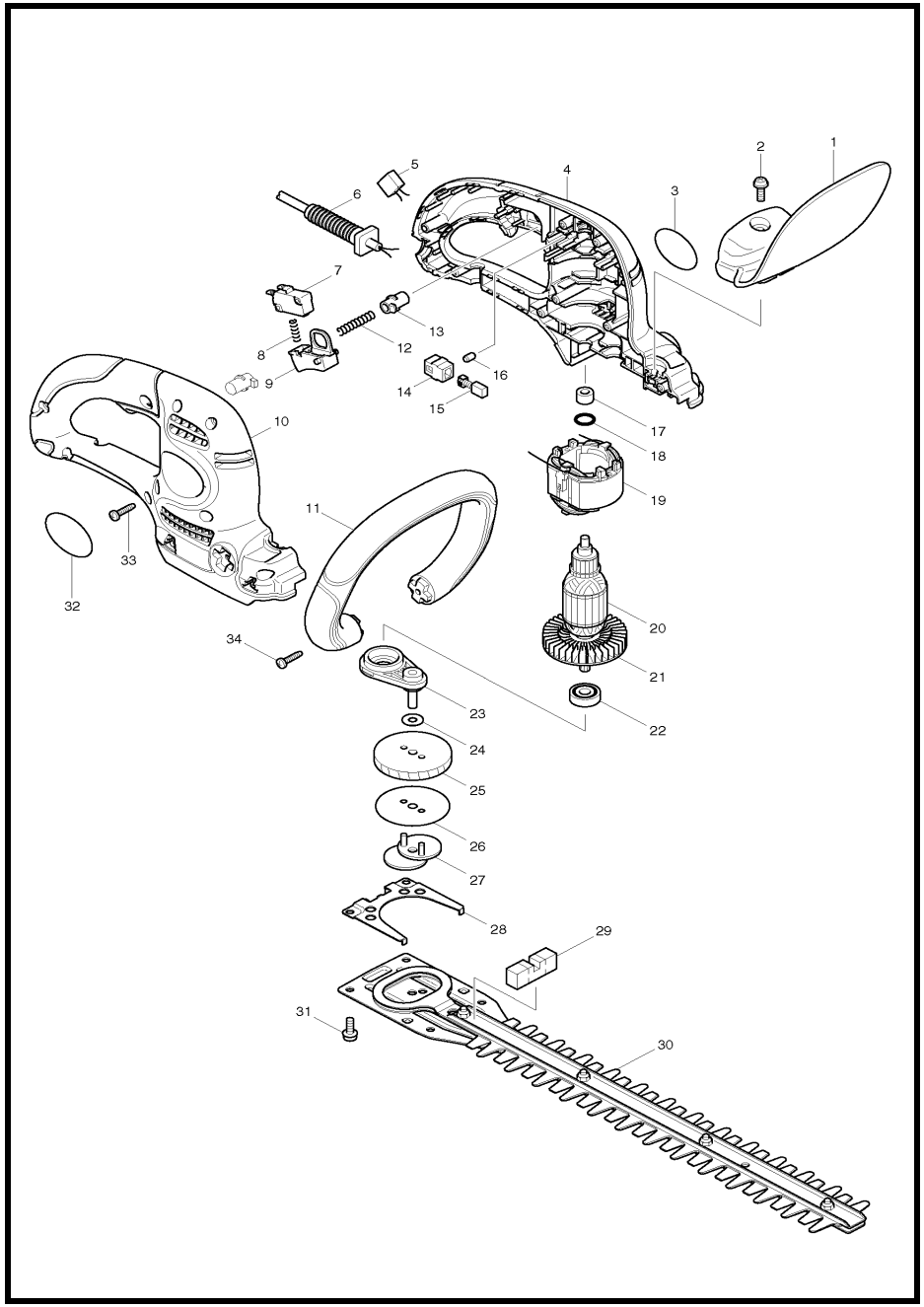

MODEL MUH353G/R

ITEM	PARTS ID	DESCRIPTION	PRICE/BAHT
001	450362-0	PROTECTOR	220
002	265074-0	PAN HEAD SCREW M5X16	50
003	819165-5	INDICATION LABEL	60
004	188278-6	HOUSING SET	1,170
006	668140-6	POWER SUPPLY CORD 0.75-2-0.3	390
007	651944-3	SWITCH DMC-1115-13	200
008	231473-8	COMPRESSION SPRING 4	50
009	154950-2	SWITCH LEVER COMPLETE	110
010	188278-6	HOUSING SET	1,170
011	418885-4	GRIP 25	380
012	233092-6	COMPRESSION SPRING 5	50
013	418881-2	LOCK ON BUTTON	70
014	643552-4	BRUSH HOLDER 5-8	100
015	B-80254	CARBON BRUSH SET CB-64A	
016	263002-9	RUBBER PIN 4	30
017	214014-5	PLANE BEARING 6	80
018	213105-9	O RING 11	30
019	593608-2	FIELD ASS'Y 220V	
020	515628-6	ARMATURE ASS'Y 220V	
022	210007-0	BALL BEARING 608VV	320
023	154509-5	BEARING BOX COMPLETE	410
024	253715-0	FLAT WASHER 6	60
025	226607-6	HELICAL GEAR 49	380
026	344392-0	PLATE	90
027	165193-1	CRANK	260
028	345508-0	SPACER	110
029	423342-9	SPONGE SEAL	60
030	A-42248	350MM SHEAR BLADE	3,260
031	265074-0	PAN HEAD SCREW M5X16	50
033	265995-6	TAPPING SCREW 4X18	40
034	265995-6	TAPPING SCREW 4X18	40
A01	418257-3	BLADE COVER	310
A02	158024-1	HOOK COMPLETE	170
A03	661905-5	EXTENSION CORD 0.75-2-10.0	930
A04	154511-8	CORD HOLDER COMPLETE	150

SERVICE DRAWING

MODEL NO. MUH355G/R

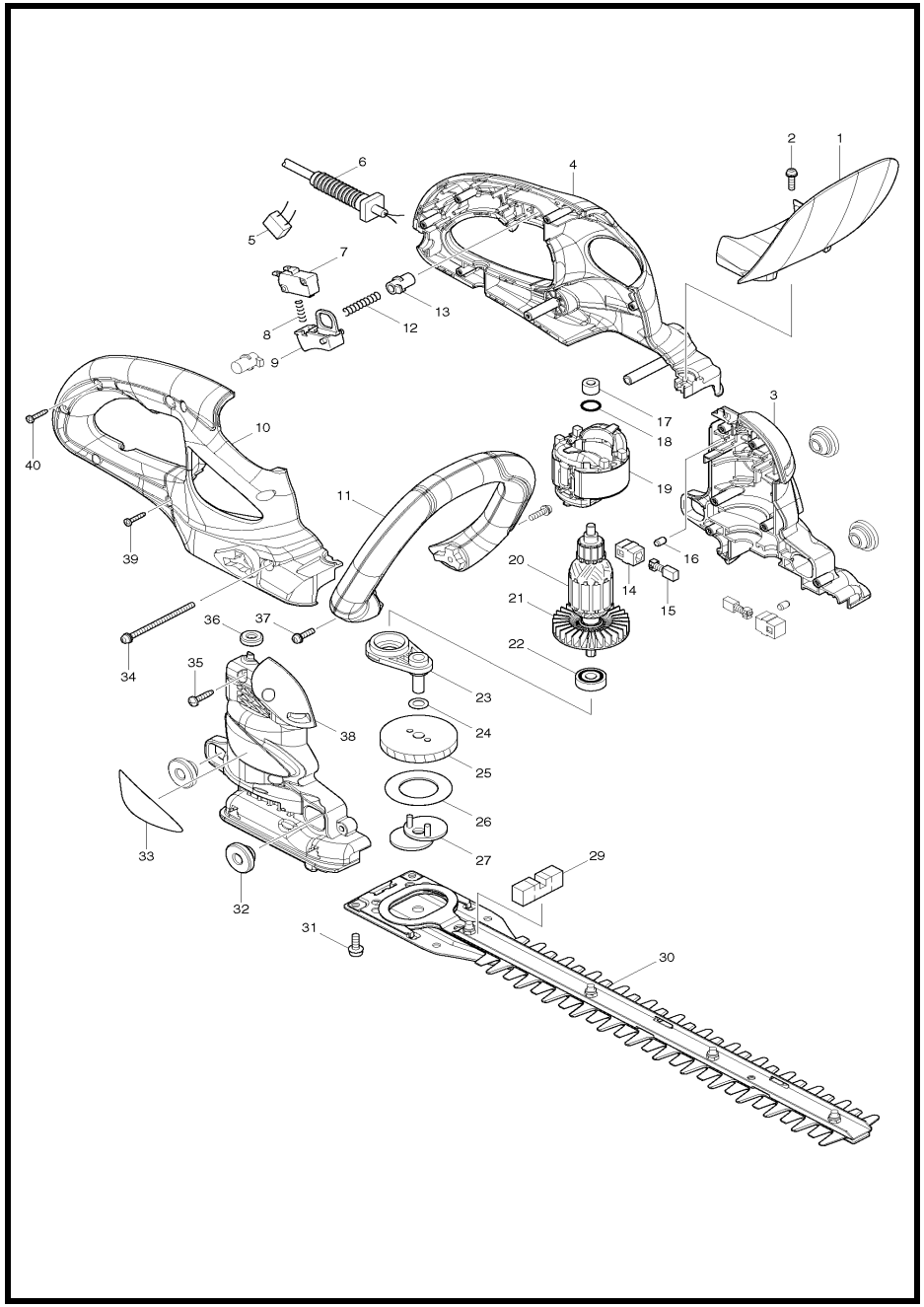

MODEL MUH355G/R

ITEM	PARTS ID	DESCRIPTION	PRICE/BAHT
001	451067-5	PROTECTOR	200
002	911128-8	PAN HEAD SCREW M4X16	30
003	188634-0	MOTOR HOUSING SET	400
004	187246-6	HANDLE SET	830
006	668140-6	POWER SUPPLY CORD 0.75-2-0.3	390
007	650593-3	SWITCH	200
008	231473-8	COMPRESSION SPRING 4	50
009	154950-2	SWITCH LEVER COMPLETE	110
010	187246-6	HANDLE SET	830
011	451065-9	GRIP 25	440
012	233092-6	COMPRESSION SPRING 5	50
013	418881-2	LOCK ON BUTTON	70
014	643552-4	BRUSH HOLDER 5-8	100
015	B-80254	CARBON BRUSH SET CB-64A	
016	263002-9	RUBBER PIN 4	30
017	214014-5	PLANE BEARING 6	80
018	213105-9	O RING 11	30
019	593698-5	FIELD ASSY 220V	
020	515768-0	ARMATURE ASSY 220V	
022	210007-0	BALL BEARING 608VV	320
023	154629-5	BEARING BOX COMPLETE	390
024	253835-0	FLAT WASHER 8	60
025	226606-8	HELICAL GEAR 49	360
026	267404-1	FLAT WASHER 28	110
027	165734-3	CRANK	270
029	423342-9	SPONGE SEAL	60
030	A-49915	350MM SHEAR BLADE	2,830
031	265074-0	PAN HEAD SCREW M5X16	50
032	424194-1	RUBBER RING 8	110
033	867424-1	MUH355 NAME PLATE	
034	911193-7	PAN HEAD SCREW M4X65	80
035	266326-2	TAPPING SCREW 4X18	30
036	424195-9	RUBBER RING 6	50
037	911138-5	PAN HEAD SCREW M4X20	50
038	188634-0	MOTOR HOUSING SET	400
039	266429-2	TAPPING SCREW 3X16	50
040	266429-2	TAPPING SCREW 3X16	50
A01	418257-3	BLADE COVER	310
A02	158024-1	HOOK COMPLETE	170
A03	661905-5	EXTENSION CORD 0.75-2-10.0	930
A04	154511-8	CORD HOLDER COMPLETE	150

SERVICE DRAWING

MODEL NO. N3701

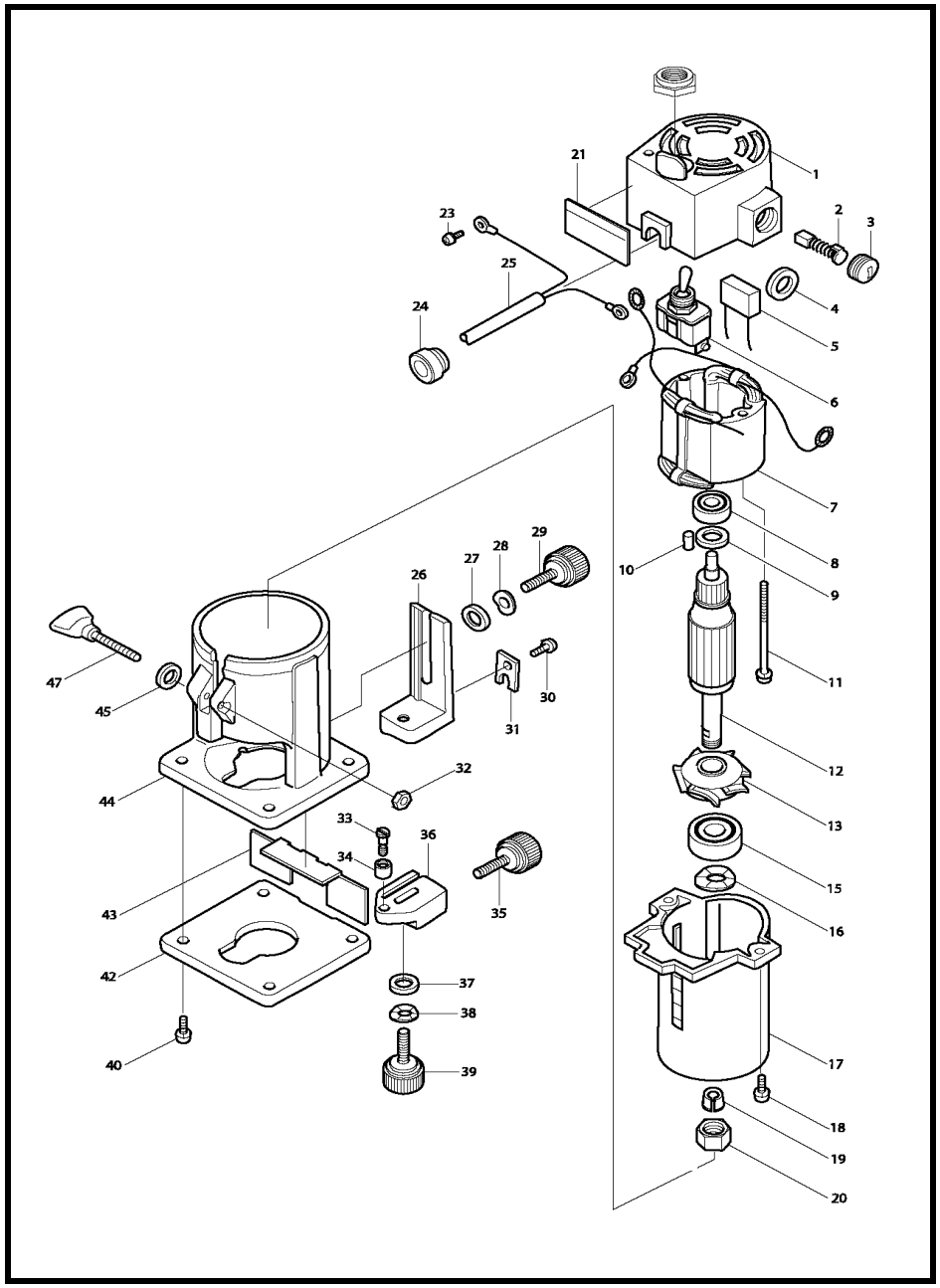

MODEL N3701

ITEM	PARTS ID	DESCRIPTION	PRICE/BAHT
001	151759-3	MOTOR REAR HOUSING COMPLETE	1,460
002	B-80232	CARBON BRUSH SET CB-51A	
003	643550-8	BRUSH HOLDER CAP 5-8	100
004	681000-5	INSULATION WASHER	30
006	651403-7	SWITCH ST115A-31	340
008	211028-5	BALL BEARING 627LB	290
009	253133-2	FLAT WASHER 7	50
010	263002-9	RUBBER PIN 4	30
011	911581-8	PAN HEAD SCREW M4X55	80
012	511933-9	ARMATURE ASS'Y 220V	
015	211236-8	BALL BEARING 6002DDW	550
016	253905-5	WAVE WASHER 23	50
017	317244-8	MOTOR HOUSING	1,470
018	911116-5	PAN HEAD SCREW M4X12	20
019	763608-8	COLLET CONE 1/4"	290
020	763606-2	COLLET NUT 6	320
021	854534-3	NAME PLATE N3701	80
023	652014-1	PAN HEAD SCREW M4X8	30
024	687105-9	STRAIN RELIEF	230
025	691134-6	POWER SUPPLY CORD 0.75-3-2.5	1,010
026	317788-8	GUIDE HOLDER	690
027	941151-9	FLAT WASHER 6	30
028	253903-9	WAVE WASHER 6	90
029	265763-7	THUMB SCREW M6X25	70
030	265135-6	+ COUNTERSUNK HEAD SCREW M4	70
031	341136-9	HOOK	90
032	252156-7	HEX. NUT M5-8	30
033	251471-6	- FLAT HEAD SCREW M5	170
034	324378-0	ROLLER 11	90
035	265764-5	THUMB SCREW M6	90
036	317789-6	TRIMMER GUIDE	360
037	941151-9	FLAT WASHER 6	30
038	253903-9	WAVE WASHER 6	90
039	265763-7	THUMB SCREW M6X25	70
040	251308-7	+ PAN HEAD SCREW M4X10	110
042	410585-2	BASE PROTECTOR	110
043	418647-0	CHIP DEFLECTOR	90
044	411930-4	BASE	380
045	941101-4	FLAT WASHER 5	20
047	251867-1	SCREW M5X30	150
401	253903-9	WAVE WASHER 6	90
402	941151-9	FLAT WASHER 6	30
406	343577-5	TEMPLET GUIDE 10	150
407	D-09173	STRAIGHT BITS 1/4"	680
409	781003-0	WRENCH 10	190
410	781008-0	WRENCH 17	160
500	122391-0	STRAIGHT GUIDE ASS'Y	430
503	122703-7	TRIMMER GUIDE ASS'Y	280

SERVICE DRAWING

MODEL NO. N5900B

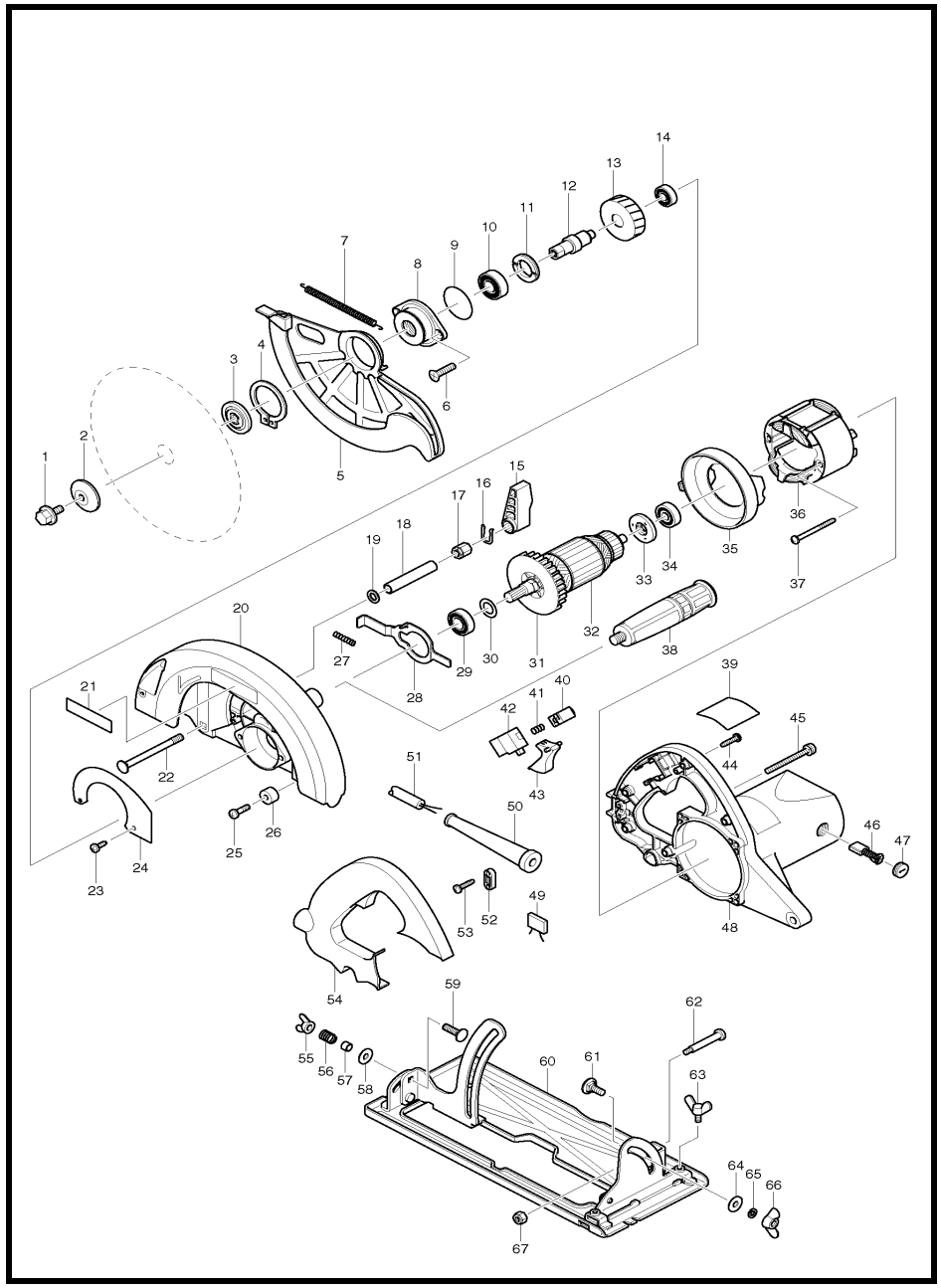

MODEL N5900B

ITEM	PARTS ID	DESCRIPTION	PRICE/BAHT
001	251644-1	HEX. FLANGE HEAD BOLT M8X20	110
002	224301-4	OUTER FLANGE 42	380
003	224303-0	INNER FLANGE 42	340
004	961202-2	RETAINING RING S-45	130
005	165374-7	SAFETY COVER	700
006	265031-8	+ COUNTERSUNK HEAD SCREW M6	80
007	231834-2	TENSION SPRING 5	340
008	317744-8	BEARING BOX	540
009	213560-5	O RING 44	150
010	211228-7	BALL BEARING 6202DDW	430
011	285809-3	BEARING RETAINER 23-36	160
012	323955-5	SPINDLE	920
013	226523-2	HELICAL GEAR 39	730
014	211088-7	BALL BEARING 6000DDW	300
015	272230-5	LEVER 54	150
016	231955-0	RING SPRING 12	80
017	252134-7	HEX. NUT M8	210
018	331568-8	PIPE 9	130
019	941201-0	FLAT WASHER 8	110
020	151847-6	BLADE CASE COMPLETE	1,300
021	819064-1	MAKITA MARK	70
022	266237-1	CAP SQUARE NECK BOLT M8X90	200
023	266026-4	TAPPING SCREW BIND CT 4X12	30
024	344845-9	COVER PLATE	110
025	251247-1	+ PAN HEAD SCREW M6X20	50
026	262552-1	RUBBER SLEEVE 6	130
027	233264-3	COMPRESSION SPRING 5	110
028	344844-1	SHAFT LOCK	150
029	211236-8	BALL BEARING 6002DDW	550
030	267164-5	FLAT WASHER 15	70
031	240003-4	FAN 80	260
032	516818-4	ARMATURE ASS'Y 220V	
033	681630-2	INSULATION WASHER	150
034	211066-7	BALL BEARING 6200LLB	410
035	417114-2	BAFFLE PLATE	190
036	596208-7	FIELD ASS'Y 220V	
037	266044-2	TAPPING SCREW 5X60	130
038	152612-6	GRIP 36 COMPLETE	200
040	417116-8	LOCK-ON BUTTON	170
041	233284-7	COMPRESSION SPRING 5	100
042	651984-1	SWITCH TG71B-2	830
043	417115-0	SWITCH LEVER	120
044	265995-6	TAPPING SCREW 4X18	40
045	911273-9	PAN HEAD SCREW M5X50	60
046	B-80329	CARBON BRUSH SET CB-153A	
047	643650-4	BRUSH HOLDER CAP 6.5-13.5	70
048	151848-4	MOTOR HOUSING COMPLETE	2,210
050	682564-2	CORD GUARD	150
051	691015-4	POWER SUPPLY CORD 0.75-2-2.5	740
052	687053-2	STRAIN RELIEF	70
053	265995-6	TAPPING SCREW 4X18	40
054	417118-4	HANDLE COVER	370
056	231139-0	COMPRESSION SPRING 9	50
057	257669-3	SLEEVE 6	80
058	253047-5	FLAT WASHER 6	40
059	251919-8	CAP SQUARE NECK BOLT M6X20	50
060	168389-3	BASE	1,220
061	266330-1	FLAT HEAD SQ. NECK BOLT M6X16	100
062	251221-9	+ PAN HEAD SCREW M6	140
063	924306-1	WING BOLT M6X10	100
064	253047-5	FLAT WASHER 6	40
065	942151-2	SPRING WASHER 6	100
066	934301-3	WING NUT M6	100
067	252014-7	HEX. LOCK NUT M6-10	80
A01	164367-1	GUIDE RULE	410
A02	782016-4	OFFSET WRENCH 13	170

SERVICE DRAWING

MODEL NO. N9500N

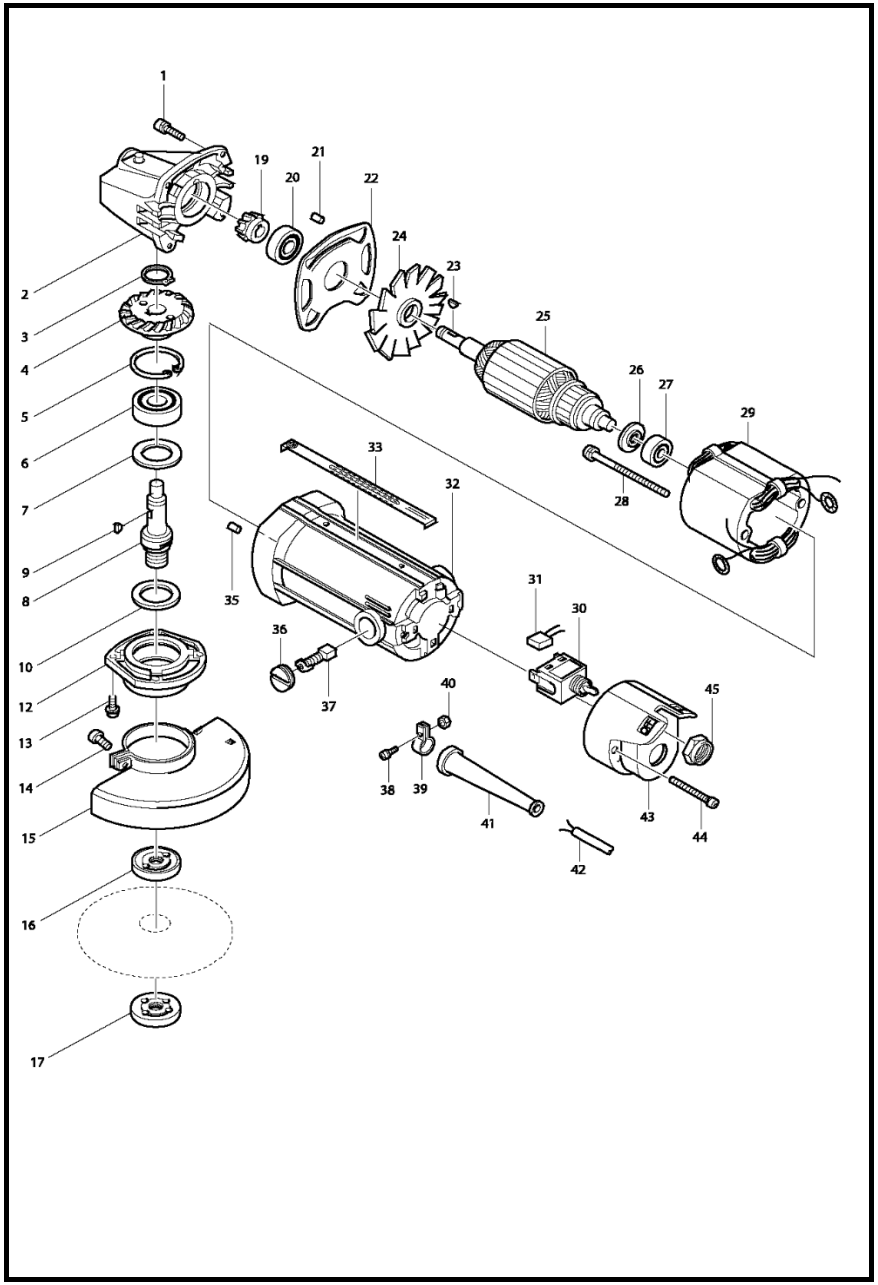

MODEL N9500N

ITEM	PARTS ID	DESCRIPTION	PRICE/BAHT
001	911136-9	PAN HEAD SCREW M4X20	50
002	156448-5	GEAR HOUSING	1,410
003	961052-5	RETAINING RING S-12	40
004	227424-7	SPIRAL BEVEL GEAR 35	450
005	962151-6	RETAINING RING R-32	90
006	211106-1	BALL BEARING 6201LLB	400
007	253055-6	FLAT WASHER 12	50
009	254002-0	WOODRUFF KEY 3	80
010	443034-4	FELT RING 18	50
012	312998-2	BEARING BOX	640
013	911121-2	PAN HEAD SCREW M4X14	20
014	251391-4	PAN HEAD SCREW M5X16	40
015	154755-0	WHEEL COVER COMPLETE	260
016	224270-9	INNER FLANGE 30	450
017	224503-2	LOCK NUT 10-30	190
017	224578-1	LOCK NUT 10-30	200
019	221318-8	SPIRAL BEVEL GEAR 14	570
020	211088-7	BALL BEARING 6000DDW	300
021	263002-9	RUBBER PIN 4	30
022	341398-9	PLATE	150
023	254002-0	WOODRUFF KEY 3	80
024	241509-5	FAN 60	160
025	511923-2	ARMATURE ASS'Y 220V	
026	213001-1	DUST SEAL 7	120
027	211028-5	BALL BEARING 627LB	290
028	911596-5	PAN HEAD SCREW M4X70	100
029	593153-7	FIELD ASS'Y 220V	
030	651433-8	SWITCH ST115A-31	330
032	159278-3	MOTOR HOUSING COMPLETE	1,180
035	263002-9	RUBBER PIN 4	30
036	643550-8	BRUSH HOLDER CAP 5-8	100
037	B-80391	CARBON BRUSH SET CB-411A	
038	911111-5	PAN HEAD SCREW M4X10	30
039	687611-4	STRAIN RELIEF	50
040	931102-0	HEX. NUT M4	50
041	682505-8	CORD GUARD 10-90	150
042	691134-6	POWER SUPPLY CORD 0.75-3-2.5	1,010
043	312999-0	REAR COVER	570
044	911256-9	PAN HEAD SCREW M5X35	40
045	652102-4	HEX. NUT M12	80
407	782401-1	LOCK NUT WRENCH 20	200

SERVICE DRAWING

MODEL NO. NHP1300S

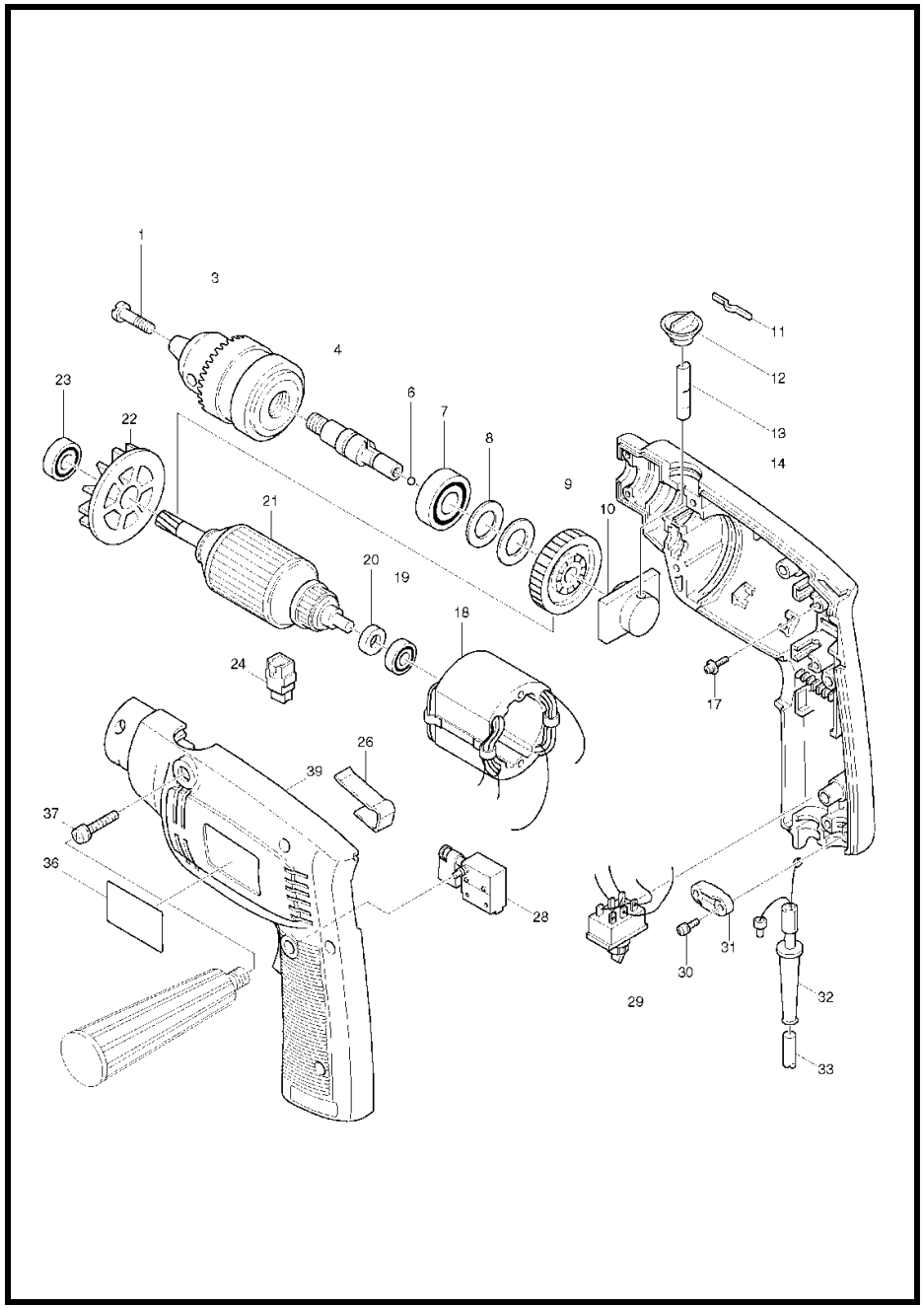

MODEL NHP1300S

ITEM	PARTS ID	DESCRIPTION	PRICE/BAHT
001	251425-3	- FLAT HEAD SCREW M6X22	90
003	192877-8	DRILL CHUCK S13	2,550
004	323785-4	SPINDLE	960
005	254011-9	WOODRUFF KEY 4	90
006	216002-8	STEEL BALL 4.8	20
007	211206-7	BALL BEARING 6202LLB	460
008	253070-0	FLAT WASHER 15	80
009	226495-1	HELICAL GEAR 62	1,170
010	153120-0	CAM COMPLETE	1,550
011	232053-3	LEAF SPRING	30
012	411623-3	KNOB	120
013	321111-1	SHIFTER PIN	190
014	182400-7	HOUSING SET	1,660
017	911124-6	PAN HEAD SCREW M4X14	30
018	633183-7	FIELD 220V	
019	211028-5	BALL BEARING 627LB	290
020	681614-0	INSULATION WASHER	80
021	511958-3	ARMATURE ASS'Y 220V	
023	211033-2	BALL BEARING 608LB	200
024	191950-1	CARBON BRUSH CB-415	
026	342460-3	HOOK	120
028	651256-4	SWITCH SGEL106CV-1A	1,790
029	651478-6	SWITCH VTX11	720
030	911133-5	PAN HEAD SCREW M4X18	50
031	687053-2	STRAIN RELIEF	70
032	682504-0	CORD GUARD 10-85	190
033	691005-7	POWER SUPPLY CORD 0.75-2-2.0	880
035	911143-2	PAN HEAD SCREW M4X22	110
037	911143-2	PAN HEAD SCREW M4X22	110
039	182400-7	HOUSING SET	1,660
401	410102-8	KEY HOLDER	80
403	152491-2	GRIP 36 COMPLETE	230

SERVICE DRAWING

MODEL NO. PV7001C

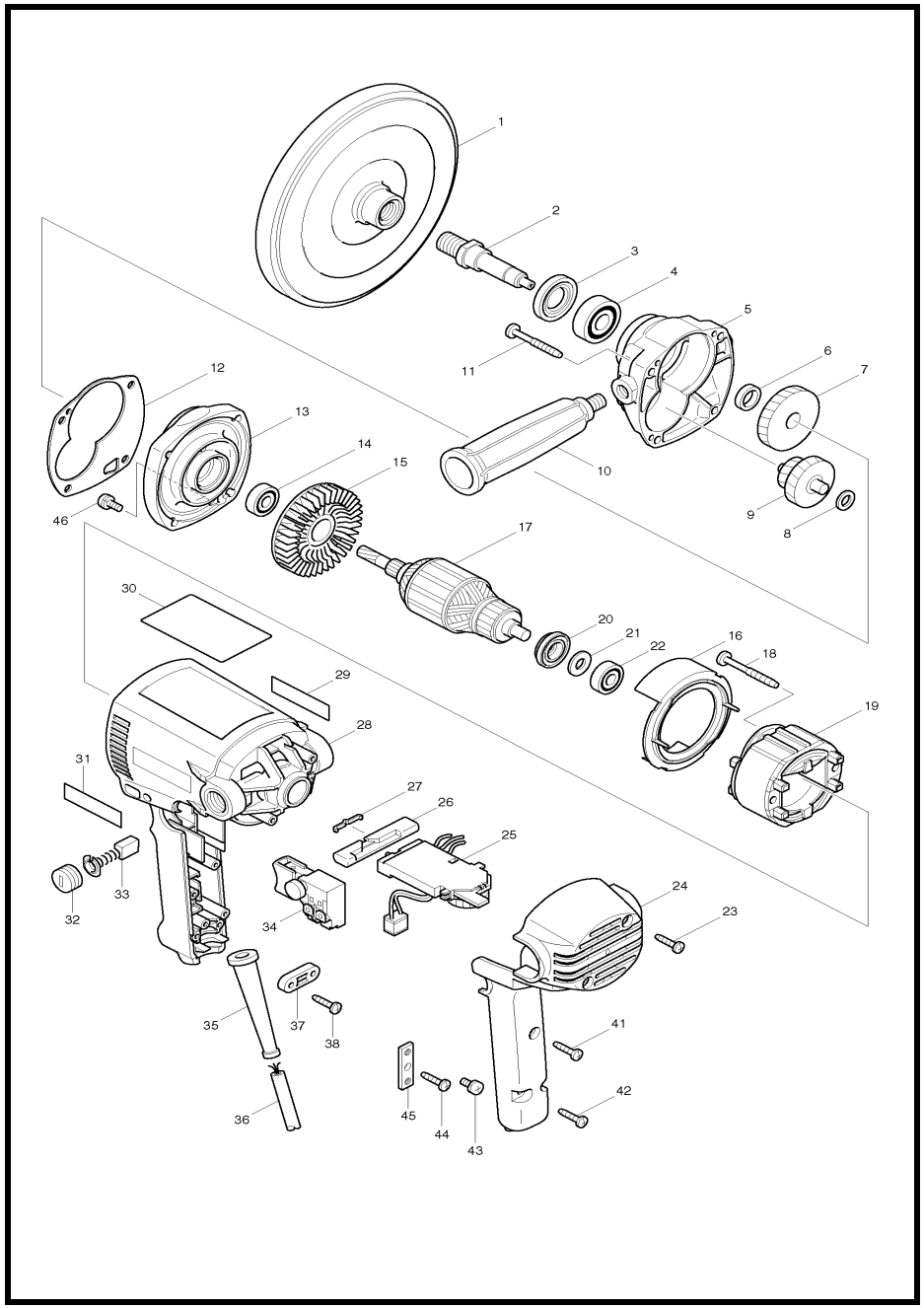

MODEL PV7001C

ITEM	PARTS ID	DESCRIPTION	PRICE/BAHT
001	743012-7	RUBBER PAD 170	1,160
002	324080-5	SPINDLE	750
003	152690-6	BEARING RETAINER COMPLETE	550
004	211129-9	BALL BEARING 6201DDW	300
005	153318-9	GEAR HOUSING COMPLETE	2,250
006	257707-1	SLEEVE 12	190
007	226536-3	HELICAL GEAR 43	620
008	253215-0	FLAT WASHER 8	50
009	226141-6	GEAR COMPLETE 21-44	1,430
010	273499-4	GRIP 34	270
011	266211-9	TAPPING SCREW 5X40	60
012	417837-2	GASKET	210
013	153319-7	GEAR HOUSING COVER COMPLETE	1,530
014	210005-4	BALL BEARING 608DDW	240
016	419721-7	BAFFLE PLATE	150
017	516433-4	ARMATURE ASS'Y 220-240V	
018	266056-5	TAPPING SCREW 5X45	110
019	594388-3	FIELD ASS'Y 220-240V	
020	681660-3	INSULATION WASHER	390
021	253139-0	FLAT WASHER 8	50
022	210005-4	BALL BEARING 608DDW	240
023	265995-6	TAPPING SCREW 4X18	40
024	417450-6	HANDLE COVER	690
025	631427-9	CONTROLLER	4,080
026	417449-1	LEVER	230
027	232201-4	LEAF SPRING	160
028	183300-4	MOTOR HOUSING SET	2,000
032	643750-0	BRUSH HOLDER CAP	70
033	A-81664	CARBON BRUSH CB-303A	
033	B-80151	CARBON BRUSH SET CB-303A	
033	B-80379	CARBON BRUSH SET CB-303A	190
034	651284-9	SWITCH SGEL115CDY-6	610
035	682566-8	CORD GUARD 10	80
036	691134-6	POWER SUPPLY CORD 0.75-3-2.5	1,010
037	687053-2	STRAIN RELIEF	70
038	265995-6	TAPPING SCREW 4X18	40
041	265995-6	TAPPING SCREW 4X18	40
042	265995-6	TAPPING SCREW 4X18	40
043	652014-1	PAN HEAD SCREW M4X8	30
044	265995-6	TAPPING SCREW 4X18	40
045	654571-5	TERMINAL BLOCK	160
046	652014-1	PAN HEAD SCREW M4X8	30
047	417793-6	COVER	160
048	256157-7	PIN 3	50
A01	781008-0	WRENCH 17	160
A02	794176-0	WOOL BONNET 180	1,590
A03	782412-6	LOCK NUT WRENCH 28	230
A04	A-81664	CARBON BRUSH CB-303A	
A04	B-80151	CARBON BRUSH SET CB-303A	
A04	B-80379	CARBON BRUSH SET CB-303A	190
E01	224523-6	SANDING LOCK NUT 16-48	410

SERVICE DRAWING

MODEL NO. PW5001C

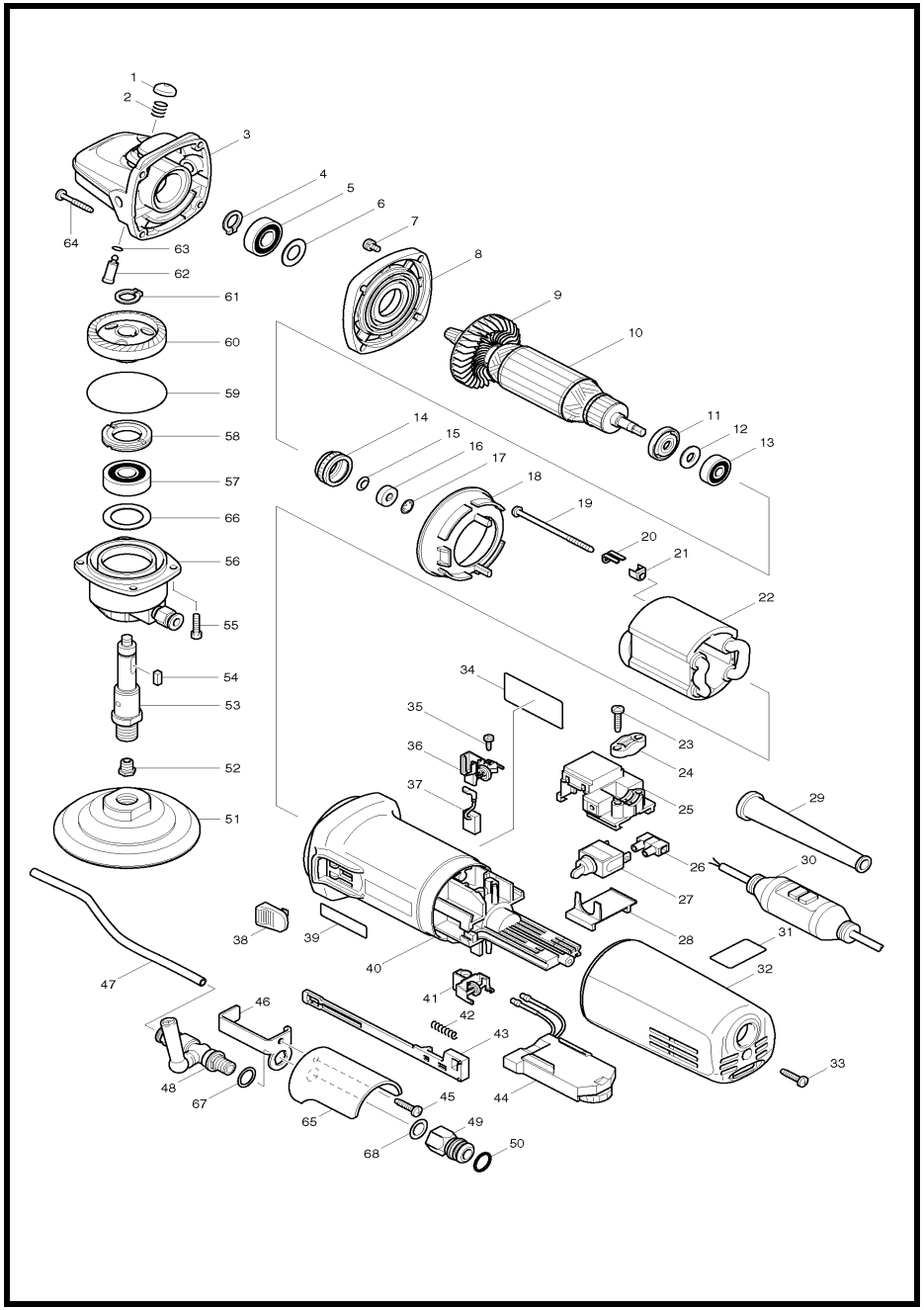

MODEL PW5001C

ITEM	PARTS ID	DESCRIPTION	PRICE/BAHT
001	418067-8	PIN CAP	100
002	233072-2	COMPRESSION SPRING 8	30
003	153488-4	GEAR HOUSING COMPLETE	1,410
004	961052-5	RETAINING RING S-12	40
005	210105-0	BALL BEARING 6001LLU	360
006	253084-9	FLAT WASHER 12	40
007	652014-1	PAN HEAD SCREW M4X8	30
008	317736-7	GEAR HOUSING COVER	470
010	515268-0	ARMATURE ASS'Y 220V	
011	681656-4	INSULATION WASHER	60
012	253823-7	FLAT WASHER 7	60
013	210027-4	BALL BEARING 627DDW	250
014	421738-8	LABYRINTH RUBBER RING 22	510
015	267756-0	WAVE WASHER 6	30
016	688117-5	MAGNET SLEEVE	230
017	259039-2	SELF LOCK 6	20
018	418452-5	BAFFLE PLATE	190
019	266258-3	TAPPING SCREW 4X70	80
020	344871-8	RETAINER	80
021	417237-6	INSULATION COVER	100
022	626548-0	FIELD 220V	
023	265995-6	TAPPING SCREW 4X18	40
024	687053-2	STRAIN RELIEF	70
025	632999-7	SWITCH BLOCK	530
026	654532-5	TERMINAL BLOCK 1P	150
027	651418-4	SWITCH ST115A-40	350
028	687113-0	COVER	100
029	682566-8	CORD GUARD 10	80
030	699039-4	POWER SUPPLY CORD UNIT	6,470
031	816399-1	INDICATION LABEL	100
032	418453-3	REAR COVER	690
033	265995-6	TAPPING SCREW 4X18	40
035	266256-7	TAPPING SCREW PT3X10	40
036	643765-7	BRUSH HOLDER	340
037	194999-0	A.C. CARBON BRUSH CB-318	480
038	417813-6	SWITCH KNOB	100
040	418512-3	MOTOR HOUSING	950
041	643765-7	BRUSH HOLDER	340
042	233071-4	COMPRESSION SPRING 4	30
043	417186-7	SWITCH LEVER	160
044	631636-0	CONTROLLER	3,240
045	265995-6	TAPPING SCREW 4X18	40
046	345372-9	PLATE	130
047	245031-4	HOSE	160
048	154649-9	COCK COMPLETE	2,370
049	331669-2	HOSE JOINT	420
050	213107-5	O RING 12	40
051	743086-8	PAD 100	3,520
052	325967-4	NOZZLE	440
053	325810-7	SPINDLE	2,710
054	254202-2	KEY 4	90
055	265490-6	HEX. SOCKET HEAD BOLT M4X16	50
056	153717-5	BEARING BOX COMPLETE	1,920
057	211129-9	BALL BEARING 6201DDW	300
058	285841-7	BEARING RETAINER	170
059	213673-2	O RING 52	100
060	227455-6	SPIRAL BEVEL GEAR 38	2,380
061	961052-5	RETAINING RING S-12	40
062	256459-1	PIN	100
063	213048-5	O RING 6	30
064	266257-5	TAPPING SCREW 4X28	50
066	267126-3	FLAT WASHER 22	120
067	261128-1	RUBBER WASHER 12	50
068	261127-3	TEFLON WASHER 10	80
A01	152490-4	GRIP 36 COMPLETE	230
A02	265083-9	+ FLAT HEAD SCREW M8X11	150
A03	417322-5	HEAD COVER	690
A04	781008-0	WRENCH 17	160
A05	194999-0	A.C. CARBON BRUSH CB-318	480
E01	154662-7	DUST COVER COMPLETE	570
E02	345587-8	BAND A	270
E03	345588-6	BAND B	210
E04	251391-4	PAN HEAD SCREW M5X16	40

SERVICE DRAWING

MODEL NO. RP1800

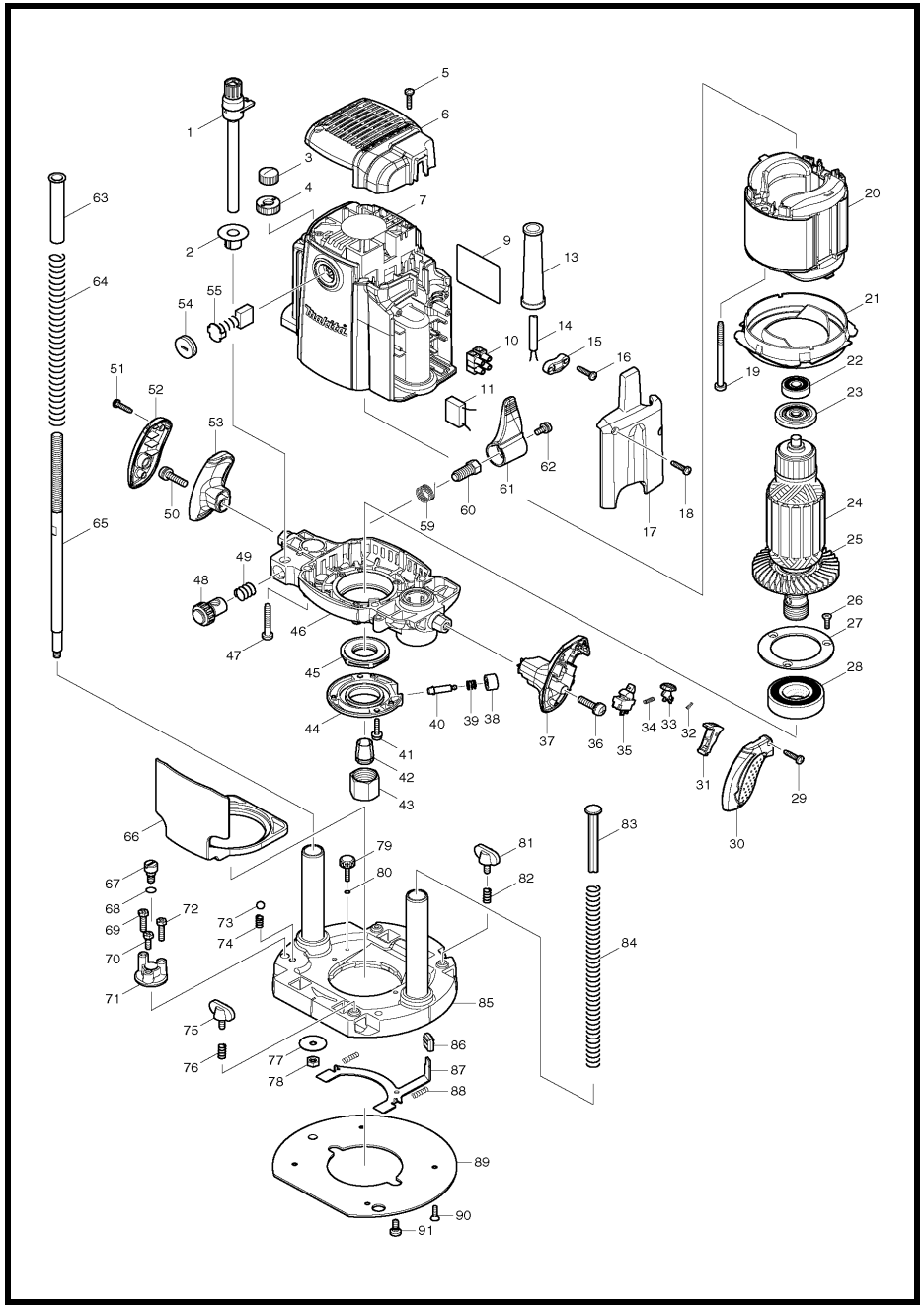

MODEL RP1800

ITEM	PARTS ID	DESCRIPTION	PRICE/BAHT
001	125542-4	THUMB SCREW M10X115 ASS'Y	660
002	450946-4	DEPTH POINTER	110
003	252643-6	WING NUT M10	150
004	410129-8	NYLON NUT M10	120
005	265995-6	TAPPING SCREW 4X18	40
006	450948-0	REAR COVER	390
007	158999-4	MOTOR HOUSING COMPLETE	4,160
010	654531-7	TERMINAL BLOCK 2P	190
013	682505-8	CORD GUARD 10-90	150
014	691015-4	POWER SUPPLY CORD 0.75-2-2.5	740
015	687053-2	STRAIN RELIEF	70
016	265995-6	TAPPING SCREW 4X18	40
017	450949-8	COVER	330
018	265995-6	TAPPING SCREW 4X18	40
019	266059-9	TAPPING SCREW 5X75	150
020	636338-3	FIELD 220V	
021	450944-8	BUFFLE PLATE	150
022	211092-6	BALL BEARING 629DDW	330
023	681671-8	INSULATION WASHER	110
024	517798-7	ARMATURE ASS'Y 220V	
026	251295-0	+ COUNTERSUNK HEAD SCREW M4X1	50
027	285731-4	BEARING RETAINER 60	200
028	211380-1	BALL BEARING 6205DDW	620
029	265995-6	TAPPING SCREW 4X18	40
030	450937-5	GRIP COVER R	380
031	450940-6	SWITCH LEVER	150
032	233024-3	COMPRESSION SPRING 4	50
033	450941-4	LOCK OFF BUTTON	150
034	231372-4	COMPRESSION SPRING 5	80
035	651432-0	SWITCH	610
036	911343-4	PAN HEAD SCREW M6X25	50
037	450936-7	GRIP R	520
038	450942-2	PUSH BUTTON	110
039	233072-2	COMPRESSION SPRING 8	30
040	268234-3	COLLARED PIN 6	190
041	911133-5	PAN HEAD SCREW M4X18	50
042	763622-4	COLLET CONE 1/2"	1,910
043	763674-5	COLLET NUT	480
044	318382-9	RETAINER COVER	570
045	285849-1	RETAINER	230
046	158971-6	MOTOR BRACKET COMPLETE	1,590
047	266012-5	TAPPING SCREW 5X35	60
048	153476-1	HALF NUT COMPLETE	640
049	231231-2	COMPRESSION SPRING 12	80
050	911343-4	PAN HEAD SCREW M6X25	50
051	265995-6	TAPPING SCREW 4X18	40
052	450939-1	GRIP COVER L	380
053	450938-3	GRIP L	530
054	643700-5	BRUSH HOLDER CAP 7-18	110
055	B-80341	CARBON BRUSH SET CB-203A	
059	233538-2	TORSION SPRING 15	50
060	266015-9	SET BOLT M10	290
061	450950-3	LOCK LEVER	150
062	911213-7	PAN HEAD SCREW M5X12	40
063	450943-0	SILENT POLE	130
064	234106-4	COMPRESSION SPRING 13	150
065	325652-9	SCREW M10	460
066	450953-7	TIP DEFLECTOR	290
067	251467-7	- FLAT HEAD SCREW M6	190
068	213030-4	O RING 8	20
069	265587-1	+HEX. BOLT M5X20	90
070	265586-3	+HEX. BOLT M5X14	90
071	315931-3	STOPPER	390
072	265587-1	+HEX. BOLT M5X20	90
073	216009-4	STEEL BALL 7.1	30
074	231419-4	COMPRESSION SPRING 5	100
075	265720-5	THUMB SCREW M5X14	120
076	231240-1	COMPRESSION SPRING 7	20
077	253783-3	FLAT WASHER 6	50
078	931303-0	HEX. NUT M6	20
079	265774-2	THUMB SCREW M4X19	160
080	213022-3	O RING 3	20
081	265720-5	THUMB SCREW M5X14	120
082	231240-1	COMPRESSION SPRING 7	20
083	417252-0	POLE	160
084	234105-6	COMPRESSION SPRING 11	160
085	158973-2	BASE COMPLETE	2,760
086	424176-3	CAP 14	90
087	346032-6	LOCK PLATE	270
088	233105-3	COMPRESSION SPRING 4	30
089	450951-1	BASE PLATE	780
090	912112-6	COUNTERSUNK HEAD SCREW M4X10	30
091	266016-7	SET BOLT M5X10	230
A01	342428-9	STRAIGHT GUIDE	540
A02	266491-7	+PAN HEAD SCREW M6X135	180
A03	763803-0	COLLET SLEEVE FOR 1/4" BIT	450
A04	763805-6	COLLET SLEEVE FOR 3/8" BIT	410
A05	781030-7	WRENCH 24	320
A06	941152-7	FLAT WASHER 6	50
A07	344364-5	TEMPLET GUIDE 16	190
A08	122700-3	GUIDE HOLDER ASS'Y	780
A09	123022-4	TRIMMER GUIDE ASS'Y	410
A10	158980-5	KNOB 55 COMPLETE	460
A11	D-07901	STRAIGHT BIT 12E	860

SERVICE DRAWING

MODEL NO. RP1801

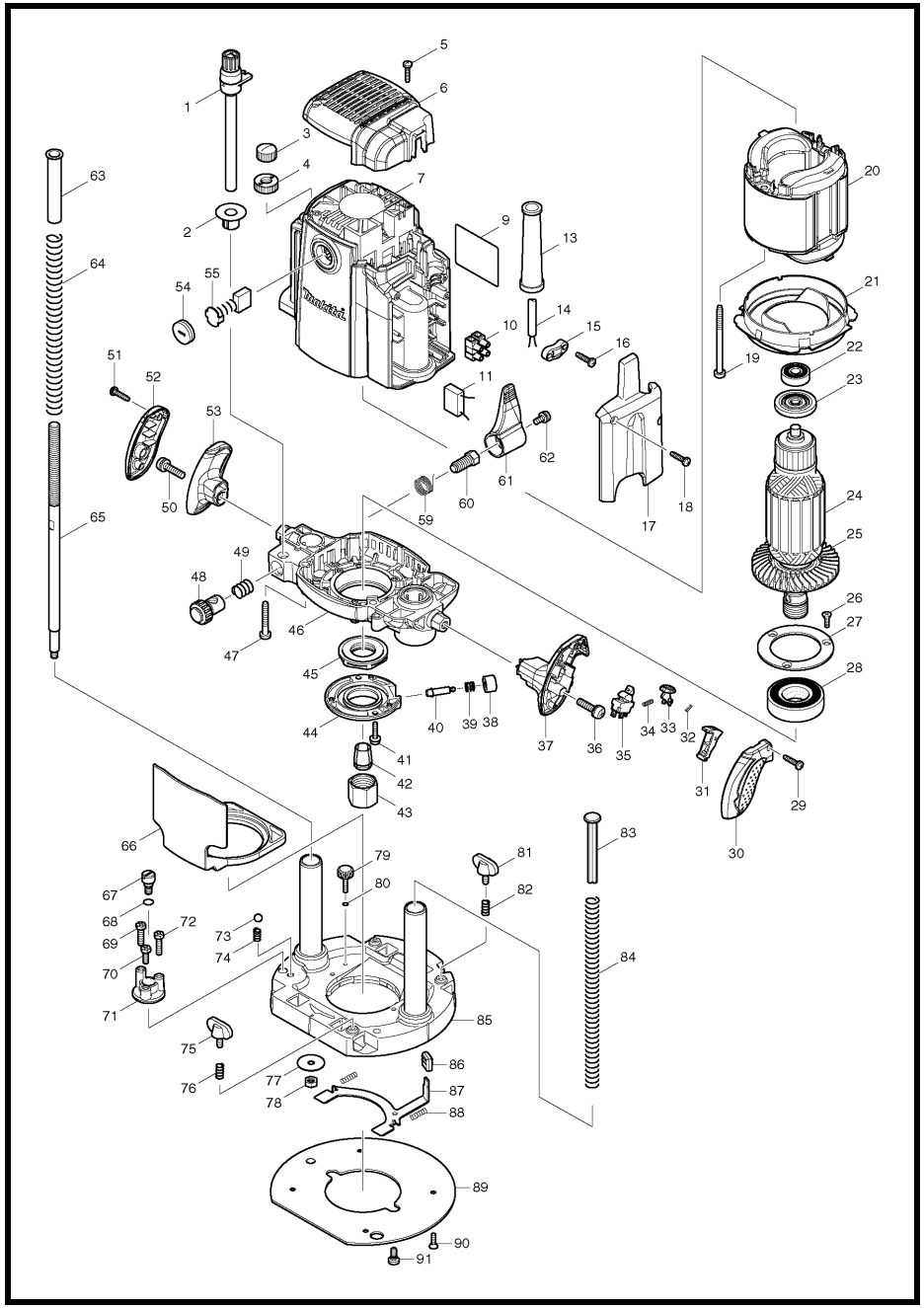

MODEL RP1801

ITEM	PARTS ID	DESCRIPTION	PRICE/BAHT
001	125542-4	THUMB SCREW M10X115 ASS'Y	660
002	450946-4	DEPTH POINTER	110
003	252643-6	WING NUT M10	150
004	410129-8	NYLON NUT M10	120
005	265995-6	TAPPING SCREW 4X18	40
006	450948-0	REAR COVER	390
007	158975-8	MOTOR HOUSING COMPLETE	4,980
010	654531-7	TERMINAL BLOCK 2P	190
013	682505-8	CORD GUARD 10-90	150
014	691015-4	POWER SUPPLY CORD 0.75-2-2.5	740
015	687053-2	STRAIN RELIEF	70
016	265995-6	TAPPING SCREW 4X18	40
017	450949-8	COVER	330
018	265995-6	TAPPING SCREW 4X18	40
019	266059-9	TAPPING SCREW 5X75	150
020	636058-9	FIELD 220V	
021	450944-8	BUFFLE PLATE	150
022	211092-6	BALL BEARING 629DDW	330
023	681671-8	INSULATION WASHER	110
024	517803-0	ARMATURE ASS'Y 220V	
026	251295-0	+ COUNTERSUNK HEAD SCREW M4X1	50
027	285731-4	BEARING RETAINER 60	200
028	211380-1	BALL BEARING 6205DDW	620
029	265995-6	TAPPING SCREW 4X18	40
030	450937-5	GRIP COVER R	380
031	450940-6	SWITCH LEVER	150
032	233024-3	COMPRESSION SPRING 4	50
033	450941-4	LOCK OFF BUTTON	150
034	231372-4	COMPRESSION SPRING 5	80
035	651430-4	SWITCH	690
036	911343-4	PAN HEAD SCREW M6X25	50
037	450936-7	GRIP R	520
038	450942-2	PUSH BUTTON	110
039	233072-2	COMPRESSION SPRING 8	30
040	268234-3	COLLARED PIN 6	190
041	911133-5	PAN HEAD SCREW M4X18	50
042	763622-4	COLLET CONE 1/2"	1,910
043	763674-5	COLLET NUT	480
044	318382-9	RETAINER COVER	570
045	285849-1	RETAINER	230
046	158971-6	MOTOR BRACKET COMPLETE	1,590
047	266012-5	TAPPING SCREW 5X35	60
048	153476-1	HALF NUT COMPLETE	640
049	231231-2	COMPRESSION SPRING 12	80
050	911343-4	PAN HEAD SCREW M6X25	50
051	265995-6	TAPPING SCREW 4X18	40
052	450939-1	GRIP COVER L	380
053	450938-3	GRIP L	530
054	643700-5	BRUSH HOLDER CAP 7-18	110
055	B-80341	CARBON BRUSH SET CB-203A	
059	233538-2	TORSION SPRING 15	50
060	266015-9	SET BOLT M10	290
061	450950-3	LOCK LEVER	150
062	911213-7	PAN HEAD SCREW M5X12	40
063	450943-0	SILENT POLE	130
064	234106-4	COMPRESSION SPRING 13	150
065	325652-9	SCREW M10	460
066	450953-7	TIP DEFLECTOR	290
067	251467-7	- FLAT HEAD SCREW M6	190
068	213030-4	O RING 8	20
069	265587-1	+HEX. BOLT M5X20	90
070	265586-3	+HEX. BOLT M5X14	90
071	315931-3	STOPPER	390
072	265587-1	+HEX. BOLT M5X20	90
073	216009-4	STEEL BALL 7.1	30
074	231419-4	COMPRESSION SPRING 5	100
075	265720-5	THUMB SCREW M5X14	120
076	231240-1	COMPRESSION SPRING 7	20
077	253783-3	FLAT WASHER 6	50
078	931303-0	HEX. NUT M6	20
079	265774-2	THUMB SCREW M4X19	160
080	213022-3	O RING 3	20
081	265720-5	THUMB SCREW M5X14	120
082	231240-1	COMPRESSION SPRING 7	20
083	417252-0	POLE	160
084	234105-6	COMPRESSION SPRING 11	160
085	158973-2	BASE COMPLETE	2,760
086	424176-3	CAP 14	90
087	346032-6	LOCK PLATE	270
088	233105-3	COMPRESSION SPRING 4	30
089	450951-1	BASE PLATE	780
090	912112-6	COUNTERSUNK HEAD SCREW M4X10	30
091	266016-7	SET BOLT M5X10	230
A01	342428-9	STRAIGHT GUIDE	540
A02	266491-7	+PAN HEAD SCREW M6X135	180
A03	763803-0	COLLET SLEEVE FOR 1/4" BIT	450
A04	763805-6	COLLET SLEEVE FOR 3/8" BIT	410
A05	781030-7	WRENCH 24	320
A06	941152-7	FLAT WASHER 6	50
A07	344364-5	TEMPLET GUIDE 16	190
A08	122700-3	GUIDE HOLDER ASS'Y	780
A09	123022-4	TRIMMER GUIDE ASS'Y	410
A10	158980-5	KNOB 55 COMPLETE	460
A11	D-07901	STRAIGHT BIT 12E	860

SERVICE DRAWING

MODEL NO. RP2300FC

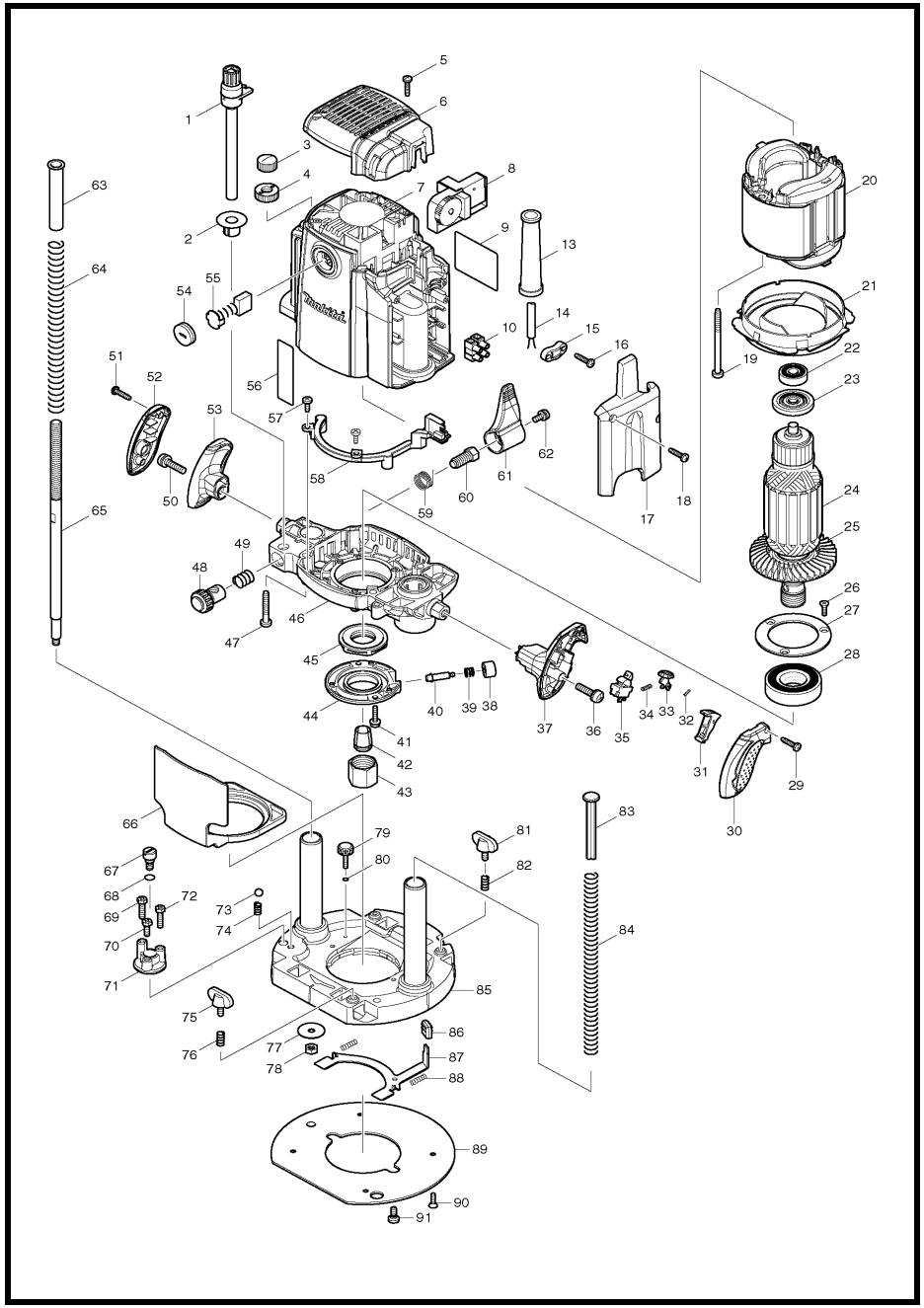

MODEL RP2300FC

ITEM	PARTS ID	DESCRIPTION	PRICE/BAHT
001	125542-4	THUMB SCREW M10X115 ASS'Y	660
002	450946-4	DEPTH POINTER	110
003	252643-6	WING NUT M10	150
004	410129-8	NYLON NUT M10	120
005	265995-6	TAPPING SCREW 4X18	40
006	450947-2	REAR COVER	550
007	158977-4	MOTOR HOUSING COMPLETE	4,370
008	620081-4	CONTROLLER	2,960
009	866377-1	RP2300FC NAME PLATE	
010	654531-7	TERMINAL BLOCK 2P	190
013	682505-8	CORD GUARD 10-90	150
014	691216-4	POWER SUPPLY CORD 1.25-2-2.5	950
015	687054-0	STRAIN RELIEF	50
016	265995-6	TAPPING SCREW 4X18	40
017	450949-8	COVER	330
018	265995-6	TAPPING SCREW 4X18	40
019	266059-9	TAPPING SCREW 5X75	150
020	636343-0	FIELD 220V	
021	450944-8	BUFFLE PLATE	150
022	211092-6	BALL BEARING 629DDW	330
023	681631-0	INSULATION WASHER	710
024	517808-0	ARMATURE ASS'Y 220-240V	
026	251295-0	+ COUNTERSUNK HEAD SCREW M4X1	50
027	285731-4	BEARING RETAINER 60	200
028	211380-1	BALL BEARING 6205DDW	620
029	265995-6	TAPPING SCREW 4X18	40
030	450937-5	GRIP COVER R	380
031	450940-6	SWITCH LEVER	150
032	233024-3	COMPRESSION SPRING 4	50
033	450941-4	LOCK OFF BUTTON	150
034	231372-4	COMPRESSION SPRING 5	80
035	651432-0	SWITCH	610
036	911343-4	PAN HEAD SCREW M6X25	50
037	450936-7	GRIP R	520
038	450942-2	PUSH BUTTON	110
039	233072-2	COMPRESSION SPRING 8	30
040	268234-3	COLLARED PIN 6	190
041	911133-5	PAN HEAD SCREW M4X18	50
042	763622-4	COLLET CONE 1/2"	1,910
043	763674-5	COLLET NUT	480
044	318382-9	RETAINER COVER	570
045	285849-1	RETAINER	230
046	158972-4	MOTOR BRACKET COMPLETE	1,550
047	266012-5	TAPPING SCREW 5X35	60
048	153476-1	HALF NUT COMPLETE	640
049	231231-2	COMPRESSION SPRING 12	80
050	911343-4	PAN HEAD SCREW M6X25	50
051	265995-6	TAPPING SCREW 4X18	40
052	450939-1	GRIP COVER L	380
053	450938-3	GRIP L	530
054	643700-5	BRUSH HOLDER CAP 7-18	110
055	B-80341	CARBON BRUSH SET CB-203A	
057	266026-4	TAPPING SCREW BIND CT 4X12	30

ITEM	PARTS ID	DESCRIPTION	PRICE/BAHT
058	631862-1	LED CIRCUIT	480
059	233538-2	TORSION SPRING 15	50
060	266015-9	SET BOLT M10	290
061	450950-3	LOCK LEVER	150
062	911213-7	PAN HEAD SCREW M5X12	40
063	450943-0	SILENT POLE	130
064	234106-4	COMPRESSION SPRING 13	150
065	325652-9	SCREW M10	460
066	450953-7	TIP DEFLECTOR	290
067	251467-7	- FLAT HEAD SCREW M6	190
068	213030-4	O RING 8	20
069	265587-1	+HEX. BOLT M5X20	90
070	265586-3	+HEX. BOLT M5X14	90
071	315931-3	STOPPER	390
072	265587-1	+HEX. BOLT M5X20	90
073	216009-4	STEEL BALL 7.1	30
074	231419-4	COMPRESSION SPRING 5	100
075	265720-5	THUMB SCREW M5X14	120
076	231240-1	COMPRESSION SPRING 7	20
077	253783-3	FLAT WASHER 6	50
078	931303-0	HEX. NUT M6	20
079	265774-2	THUMB SCREW M4X19	160
080	213022-3	O RING 3	20
081	265720-5	THUMB SCREW M5X14	120
082	231240-1	COMPRESSION SPRING 7	20
083	417252-0	POLE	160
084	234105-6	COMPRESSION SPRING 11	160
085	158973-2	BASE COMPLETE	2,760
086	424176-3	CAP 14	90
087	346032-6	LOCK PLATE	270
088	233105-3	COMPRESSION SPRING 4	30
089	450951-1	BASE PLATE	780
090	912112-6	COUNTERSUNK HEAD SCREW M4X10	30
091	266016-7	SET BOLT M5X10	230
A01	122700-3	GUIDE HOLDER ASS'Y	780
A02	123022-4	TRIMMER GUIDE ASS'Y	410
A03	342428-9	STRAIGHT GUIDE	540
A04	266491-7	+PAN HEAD SCREW M6X135	180
A05	763803-0	COLLET SLEEVE FOR 1/4" BIT	450
A06	763805-6	COLLET SLEEVE FOR 3/8" BIT	410
A07	781030-7	WRENCH 24	320
A08	941152-7	FLAT WASHER 6	50
A09	344364-5	TEMPLET GUIDE 16	190
A10	D-07901	STRAIGHT BIT 12E	860
A11	158980-5	KNOB 55 COMPLETE	460

SERVICE DRAWING

MODEL NO. RP2301FC

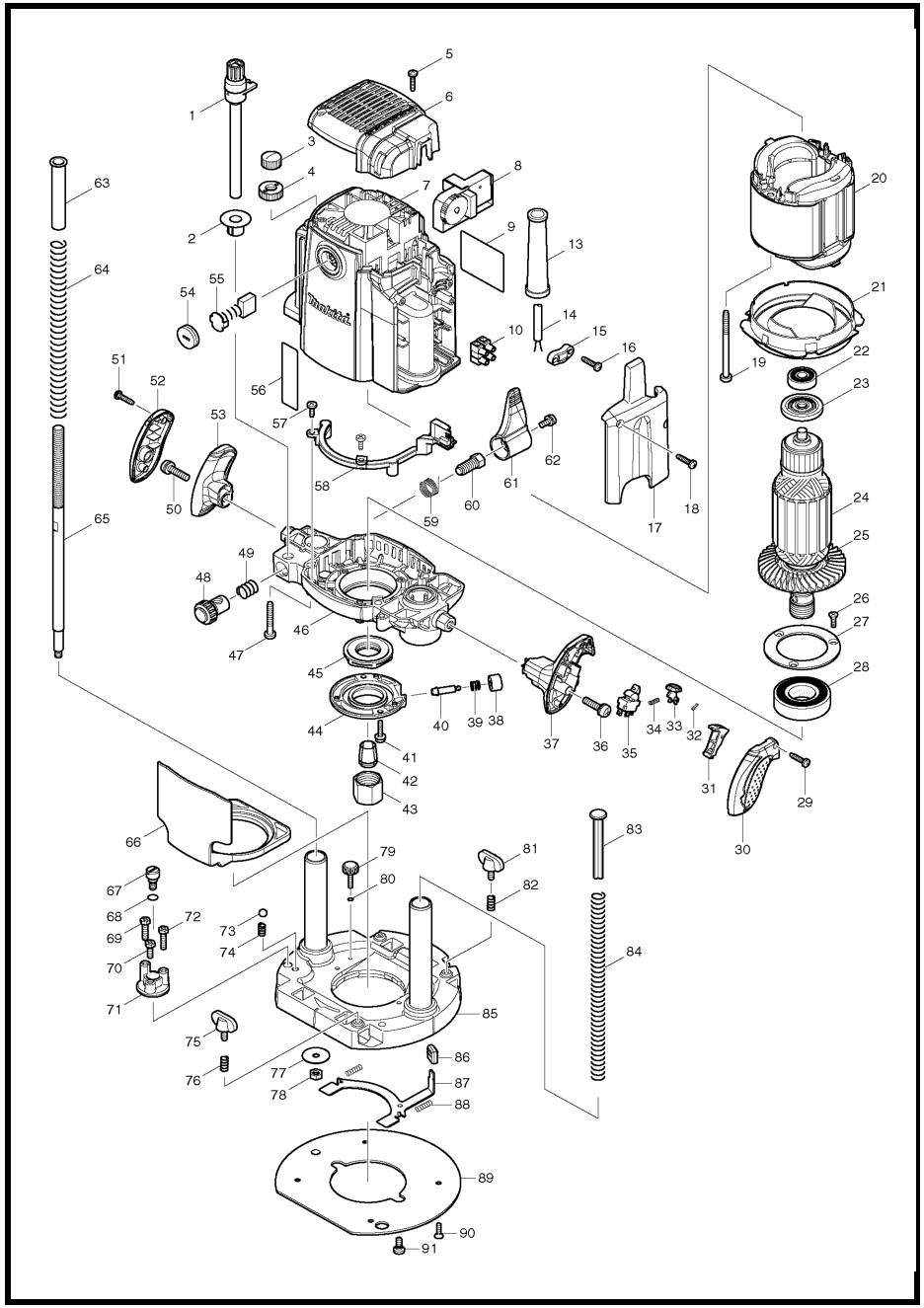

MODEL RP2301FC

ITEM	PARTS ID	DESCRIPTION	PRICE/BAHT
001	125542-4	THUMB SCREW M10X115 ASS'Y	660
002	450946-4	DEPTH POINTER	110
003	252643-6	WING NUT M10	150
004	410129-8	NYLON NUT M10	120
005	265995-6	TAPPING SCREW 4X18	40
006	450947-2	REAR COVER	550
007	158978-2	MOTOR HOUSING COMPLETE	4,450
008	620081-4	CONTROLLER	2,960
010	654531-7	TERMINAL BLOCK 2P	190
013	682505-8	CORD GUARD 10-90	150
014	691216-4	POWER SUPPLY CORD 1.25-2-2.5	950
015	687054-0	STRAIN RELIEF	50
016	265995-6	TAPPING SCREW 4X18	40
017	450949-8	COVER	330
018	265995-6	TAPPING SCREW 4X18	40
019	266059-9	TAPPING SCREW 5X75	150
020	636013-1	FIELD 220V	
021	450944-8	BUFFLE PLATE	150
022	211092-6	BALL BEARING 629DDW	330
023	681631-0	INSULATION WASHER	710
024	517813-7	ARMATURE ASS'Y 220V	
026	251295-0	+ COUNTERSUNK HEAD SCREW M4X1	50
027	285731-4	BEARING RETAINER 60	200
028	211380-1	BALL BEARING 6205DDW	620
029	265995-6	TAPPING SCREW 4X18	40
030	450937-5	GRIP COVER R	380
031	450940-6	SWITCH LEVER	150
032	233024-3	COMPRESSION SPRING 4	50
033	450941-4	LOCK OFF BUTTON	150
034	231372-4	COMPRESSION SPRING 5	80
035	651430-4	SWITCH	690
036	911343-4	PAN HEAD SCREW M6X25	50
037	450936-7	GRIP R	520
038	450942-2	PUSH BUTTON	110
039	233072-2	COMPRESSION SPRING 8	30
040	268234-3	COLLARED PIN 6	190
041	911133-5	PAN HEAD SCREW M4X18	50
042	763622-4	COLLET CONE 1/2"	1,910
043	763674-5	COLLET NUT	480
044	318382-9	RETAINER COVER	570
045	285849-1	RETAINER	230
046	158972-4	MOTOR BRACKET COMPLETE	1,550
047	266012-5	TAPPING SCREW 5X35	60
048	153476-1	HALF NUT COMPLETE	640
049	231231-2	COMPRESSION SPRING 12	80
050	911343-4	PAN HEAD SCREW M6X25	50
051	265995-6	TAPPING SCREW 4X18	40
052	450939-1	GRIP COVER L	380
053	450938-3	GRIP L	530
054	643700-5	BRUSH HOLDER CAP 7-18	110
055	B-80341	CARBON BRUSH SET CB-203A	
057	266026-4	TAPPING SCREW BIND CT 4X12	30
058	631862-1	LED CIRCUIT	480

ITEM	PARTS ID	DESCRIPTION	PRICE/BAHT
059	233538-2	TORSION SPRING 15	50
060	266015-9	SET BOLT M10	290
061	450950-3	LOCK LEVER	150
062	911213-7	PAN HEAD SCREW M5X12	40
063	450943-0	SILENT POLE	130
064	234106-4	COMPRESSION SPRING 13	150
065	325652-9	SCREW M10	460
066	450953-7	TIP DEFLECTOR	290
067	251467-7	- FLAT HEAD SCREW M6	190
068	213030-4	O RING 8	20
069	265587-1	+HEX. BOLT M5X20	90
070	265586-3	+HEX. BOLT M5X14	90
071	315931-3	STOPPER	390
072	265587-1	+HEX. BOLT M5X20	90
073	216009-4	STEEL BALL 7.1	30
074	231419-4	COMPRESSION SPRING 5	100
075	265720-5	THUMB SCREW M5X14	120
076	231240-1	COMPRESSION SPRING 7	20
077	253783-3	FLAT WASHER 6	50
078	931303-0	HEX. NUT M6	20
079	265774-2	THUMB SCREW M4X19	160
080	213022-3	O RING 3	20
081	265720-5	THUMB SCREW M5X14	120
082	231240-1	COMPRESSION SPRING 7	20
083	417252-0	POLE	160
084	234105-6	COMPRESSION SPRING 11	160
085	158973-2	BASE COMPLETE	2,760
086	424176-3	CAP 14	90
087	346032-6	LOCK PLATE	270
088	233105-3	COMPRESSION SPRING 4	30
089	450951-1	BASE PLATE	780
090	912112-6	COUNTERSUNK HEAD SCREW M4X10	30
091	266016-7	SET BOLT M5X10	230
A01	342428-9	STRAIGHT GUIDE	540
A02	266491-7	+PAN HEAD SCREW M6X135	180
A03	763803-0	COLLET SLEEVE FOR 1/4" BIT	450
A04	763805-6	COLLET SLEEVE FOR 3/8" BIT	410
A05	781030-7	WRENCH 24	320
A06	941152-7	FLAT WASHER 6	50
A07	344364-5	TEMPLET GUIDE 16	190
A08	122700-3	GUIDE HOLDER ASS'Y	780
A09	123022-4	TRIMMER GUIDE ASS'Y	410
A10	158980-5	KNOB 55 COMPLETE	460
A11	D-07901	STRAIGHT BIT 12E	860

SERVICE DRAWING

MODEL NO. RT0700C

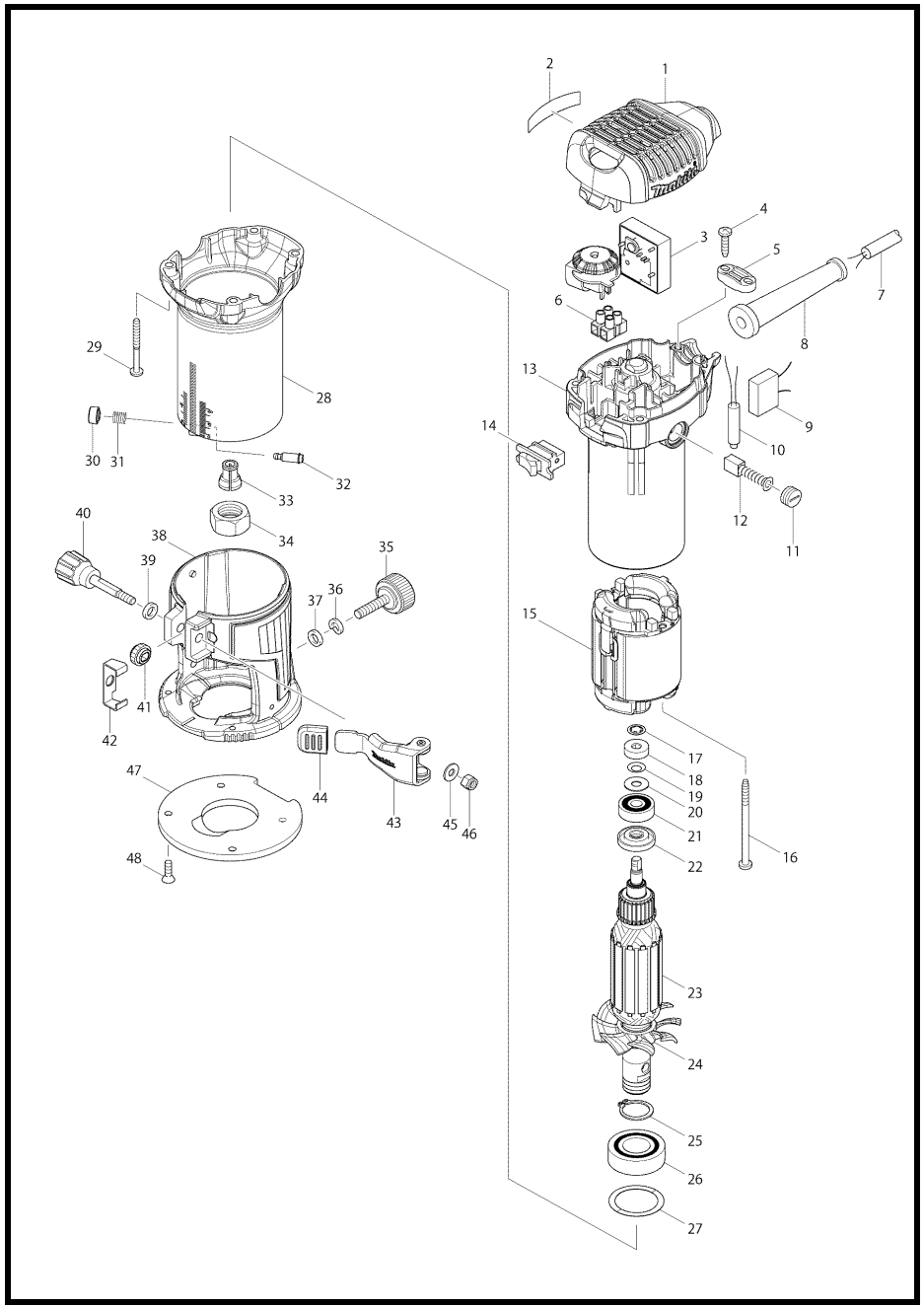

MODEL RT0700C

ITEM	PARTS ID	DESCRIPTION	PRICE/BAHT
001	452465-6	TOP COVER	240
003	620040-8	CONTRLLER	1,780
004	266326-2	TAPPING SCREW 4X18	30
005	687124-5	STRAIN RELIEF	70
006	654542-2	TERMINAL BLOCK 2P	190
007	691065-9	POWER SUPPLY CORD 0.75-2-2.5	690
008	682569-2	CORD GUARD 8-85	110
011	643550-8	BRUSH HOLDER CAP 5-8	100
013	140736-0	BRACKET COMPLETE	590
014	651527-9	SWITCH	220
015	633768-9	FIELD 220V	
016	266340-8	TAPPING SCREW 4X65	70
017	259039-2	SELF LOCK 6	20
018	688174-3	MAGNET SLEEVE	220
019	253332-6	THIN WASHER 6	50
020	267756-0	WAVE WASHER 6	30
021	210023-2	BALL BEARING 627DDW	210
022	681668-7	RESIN WASHER	60
023	515843-2	ARMATURE ASS'Y 220V	
025	961057-5	RETAINING RING S-17	40
026	210301-0	BALL BEARING 6003DDW	600
027	253906-3	WAVE WASHER 26	80
028	140735-2	OUTER HOUSING COMPLETE	1,520
029	266560-4	TAPPING SCREW 4X40	50
030	452468-0	PUSH BUTTON	70
031	233127-3	COMPRESSION SPRING 7	100
032	256437-1	PIN 4	100
033	763637-1	COLLET CONE 1/4"	800
034	763615-1	COLLET NUT	230
035	265763-7	THUMB SCREW M6X25	70
036	942151-2	SPRING WASHER 6	100
037	941151-9	FLAT WASHER 6	30
038	140739-4	TRIMMER BASE COMPLETE	1,560
039	941151-9	FLAT WASHER 6	30
040	265792-0	THUMB SCREW M5X35	150
041	227262-7	SPUR GEAR 16	100
042	346392-6	CAM PLATE	60
043	163524-8	LOCK LEVER COMPLETE	240
044	424396-9	RUBBER CAP	60
045	941101-4	FLAT WASHER 5	20
046	252103-8	HEX. LOCK NUT M5-8	110
047	413149-1	BASE PROTECTOR	220
048	912112-6	COUNTERSUNK HEAD SCREW M4X10	30
A01	122965-7	STRAIGHT GUIDE ASSEMBLY	350
A02	195559-1	DUST NOZZLE SET	290
A03	343577-5	TEMPLET GUIDE 10	150
A04	763619-3	COLLET CONE 3/8"	270
A05	781011-1	WRENCH 22	230
A06	781039-9	WRENCH 13	150

SERVICE DRAWING

MODEL NO. SJ401

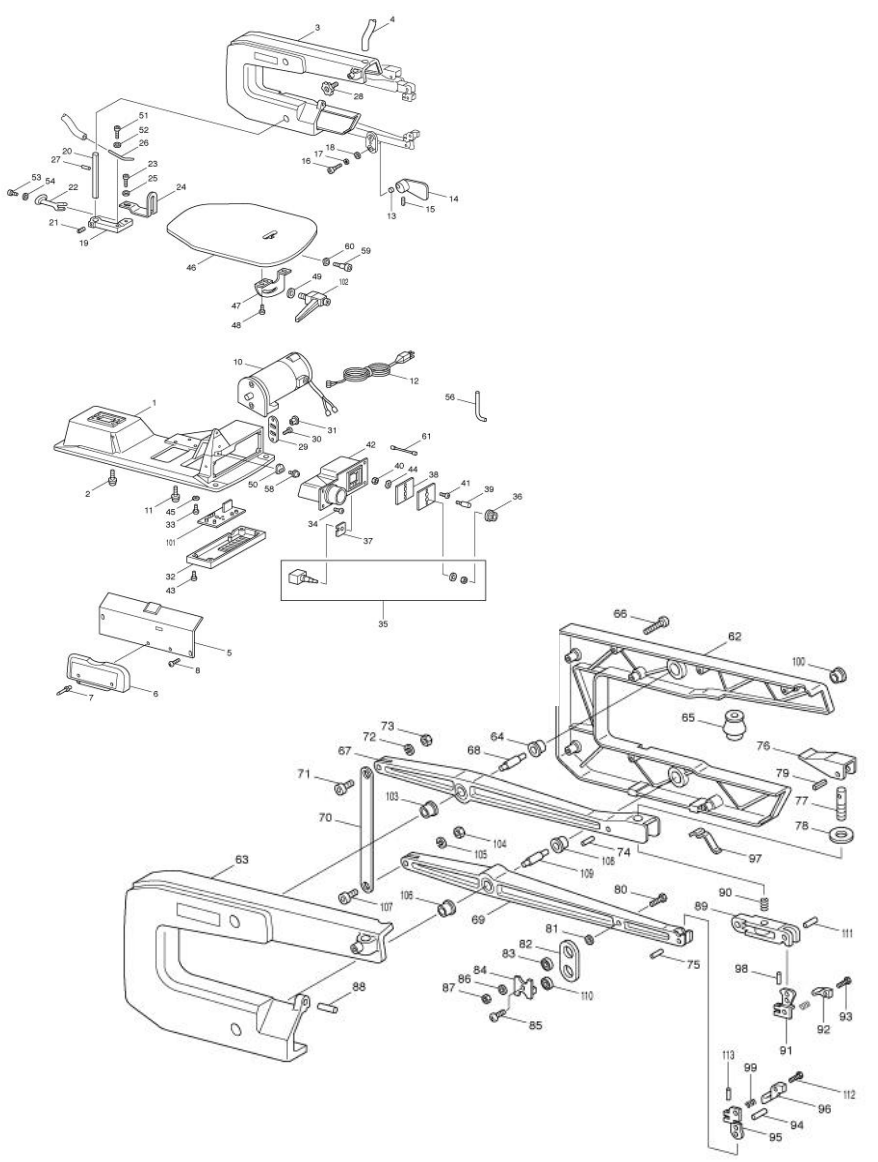

MODEL SJ401

ITEM	PARTS ID	DESCRIPTION	PRICE/BAHT
001	240051-000	BASE	4,720
002	020720-003	SCREW & WASHER (4)	50
003	900567-000	BODY	7,440
004	303209-000	HOSE	70
005	270308-000	PLATE COVER	360
006	303202-000	BLADE STORAGE CASE	140
007	024201-001	PULL NAIL (2)	20
008	020106-013	SCREW (2)	20
009	351011-000	BLADE	130
10A	375009-000	CARBON BRUSH	
10B	303000-000	BRUSH HOLDER CAP	70
10C	880084-000	ARMATURE ASS'Y WITH BEARINGS	
10D	900312-000	FIELD ASS'Y WITH MOTOR HOUSING	1,940
10E	303205-000	BRUSH HOLDER	250
10F	303204-000	MOTOR REAR COVER	300
*	225083-000	MOTOR FRONT COVER	380
10G	020127-003	SCREW (2)	60
011	020723-007	SCREW & WASHER (3)	30
013	060047-000	SPACER	30
014	240042-000	COUNTER WEIGHT	320
015	020508-001	SET SCREW	90
016	020613-001	HEX SOCKET BOLT	110
017	021200-001	SPRING WASHER	20
018	021101-027	FLAT WASHER	20
019	225070-000	HOLD DOWN BLOCK	250
020	290079-000	SUPPORT ROD	170
021	020505-003	SET SCREW	50
022	270309-000	HOLD DOWN FOOT	140
023	020601-003	HEX SOCKET BOLT (3)	50
024	270310-000	BLADE SUPPORT & GUARD	200
025	021104-023	FLAT WASHER	20
026	290081-000	DUST BLOWER	130
027	026104-001	PIN SPRING	20
028	303071-001	KNOB	110
029	270248-000	BUSHING SET COVER	110
030	020103-015	SCREW	20
031	913002-000	BUSHING	50
032	303203-000	BOARD COVER	200
033	020216-005	SCREW	20
035	370021-000	SWITCH,WASHER & NUT	230
036	303207-000	CONTROL KNOB	200
037	914019-000	SPONGE	110
038-A	863305-007	INDICATION LABEL	120
038	303259-001	SWITCH COVER	90
040-1	022804-000	NUT	50
041	020228-001	SCREW (2)	20
042	302043-003	SWITCH CASE	250
043	020200-001	SCREW (4)	20
044	090042-000	SWITCH	390
045	021306-001	LOCK WASHER (2)	20
046	224053-000	TABLE	2,020
047	270311-000	TILT BRACKET	200
048	020219-001	SCREW (3)	20

ITEM	PARTS ID	DESCRIPTION	PRICE/BAHT
049	021101-025	FLAT WASHER	20
050	303242-000	POINTER	70
051	303215-000	BEVEL LEVER	110
052	132060-000	SHAFT	170
053	132057-000	BOLT	160
054	029143-001	COMPRESSING SPRING	50
055	040005-003	HEX WRENCH "L" M3	90
056	040026-001	BLADE CHANGING ROD	60
057	040006-001	HEX WRENCH "L" M4	40
058	020726-001	PAN HEAD SCREW	20
059	020614-001	SOCKET HEAD SCREW	110
060	021402-001	WAVE WASHER	60
62+63	900570-000	ARM COVER	3,490
064	053014-000	BEARING FLANGE (4)	130
065	330026-000	AIR DIAPHRAGM	150
066	020702-001	COVER SET SCREW (8)	20
067	224041-000	UPPER ARM	690
068	290077-000	ARM PIN (2)	220
069	224042-000	LOWER ARM	730
070	270251-000	CONNECTOR	180
071	028935-001	SET SCREW (2)	110
072	021202-003	SPRING WASHER (2)	20
073	022101-001	NUT (2)	20
074	026102-007	PIN	30
075	026103-015	ROLL PIN (2)	20
076	225069-000	BLADE TENSION LEVER	130
077	290078-000	TENSION ADJUSTING BOLT	90
078	021100-011	FLAT WASHER	20
079	026104-009	PIN	20
080	020600-001	HEX SOCKET BOLT	50
081	060052-000	SPACER	50
082	303201-000	LINK ARM	110
083	050012-000	BEARING	310
084	270252-000	BEARING FENCE	90
085	020200-015	SCREW	20
086	021101-027	FLAT WASHER	20
087	022101-001	NUT	20
088	026202-007	PIN	50
089	225073-000	BLADE SUPPORT	240
090	029141-001	SPRING	30
091	250005-000	UPPER BLADE HOLDER	350
092	250006-000	UPPER BLADE NUT	270
093	020608-003	HEX SOCKET BOLT (2)	50
094	026103-015	ROLL PIN	20
095	250003-000	LOWER BLADE HOLDER	350
096	250004-000	LOWER BLADE NUT	270
097	026107-001	PIN (2)	20
098	029144-001	COMPRESSING SPRING (2)	50
099	330029-000	ARM COVER RUBBER CUP	50
101	900403-000	LOCK HANDLE ASS'Y	350
*	803305-001	STYROFOAM	800

SERVICE DRAWING

MODEL NO. SP6000

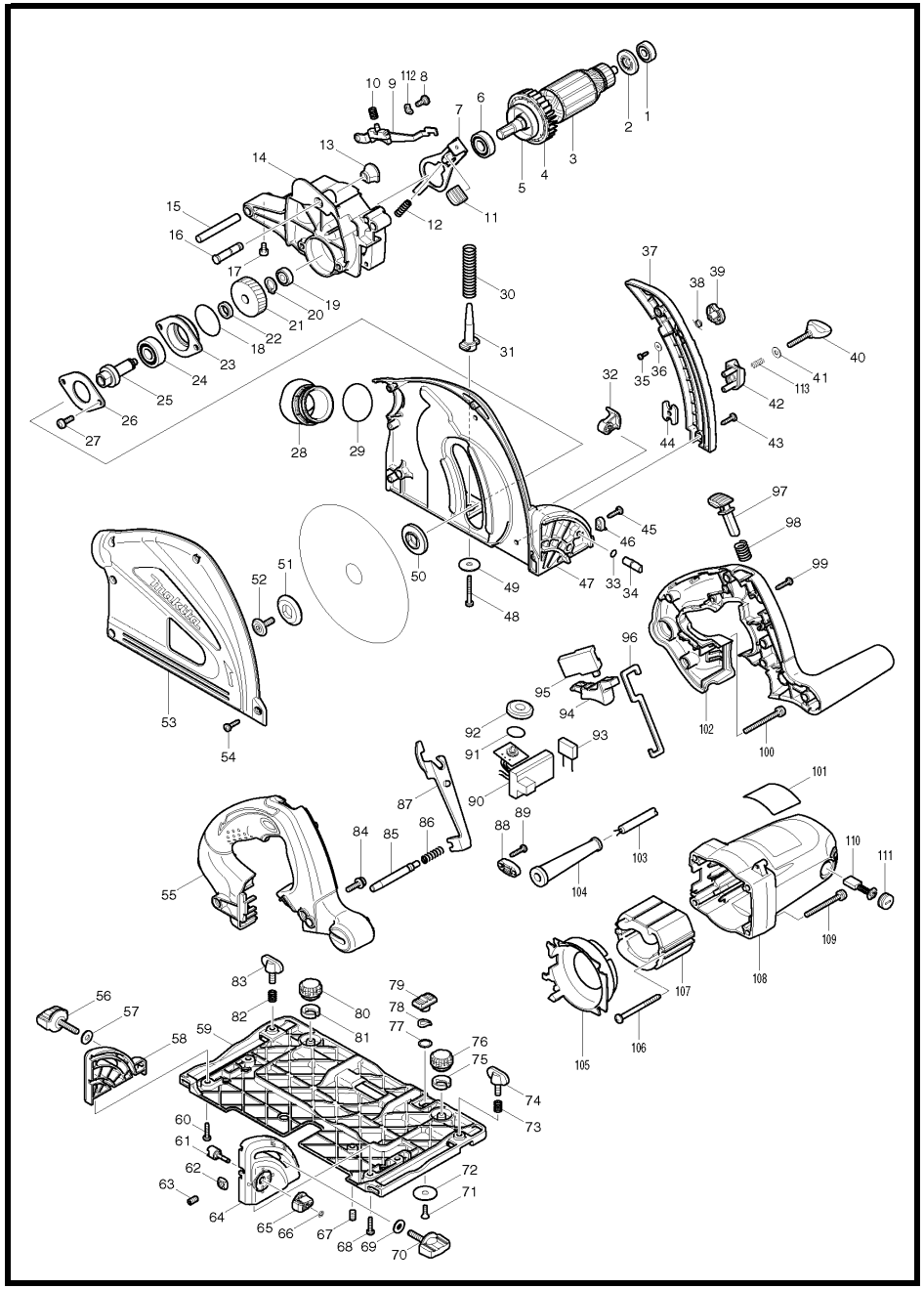

MODEL SP6000

ITEM	PARTS ID	DESCRIPTION	PRICE/BAHT
001	210013-5	BALL BEARING 698VV	410
002	681634-4	INSULATION WASHER	120
003	513678-5	ARMATURE ASS'Y 220-240V	
005	345767-6	DRUM	260
006	211131-2	BALL BEARING 6001DDW	310
007	345742-2	SHAFT LOCK	250
008	265011-4	+ BINDING HEAD SCREW M5	120
009	158096-6	SHOE COMPLETE	510
010	233480-7	COMPRESSION SPRING 7	40
011	286275-7	CAP	50
012	233084-5	COMPRESSION SPRING 6	30
013	286278-1	CAP	110
014	158092-4	GEAR HOUSING COMPLETE	3,210
015	324716-6	PIN 8	150
016	324708-5	STOPPER PIN 8	150
017	265913-4	HEX. SOCKET HEAD BOLT M5X8	80
018	213512-6	O RING 39	130
019	211021-9	BALL BEARING 607LLB	240
020	961052-5	RETAINING RING S-12	40
021	226637-7	HELICAL GEAR 39	700
022	257010-0	RING 12	110
023	318088-9	BEARING BOX	280
024	211129-9	BALL BEARING 6201DDW	300
025	324707-7	SPINDLE	620
026	285689-7	BEARING RETAINER 55	120
027	911221-8	PAN HEAD SCREW M5X16	30
028	419620-3	DUST NOZZLE	200
029	213460-9	O RING 35	50
030	233479-2	COMPRESSION SPRING 11	110
031	419624-5	SPRING HOLDER	150
032	158095-8	LEVER 20 COMPLETE	170
033	213021-5	O RING 5	20
034	324710-8	PIN 8	110
035	266007-8	TAPPING SCREW BIND PT 3X10	30
036	253821-1	FLAT WASHER 3	50
037	419625-3	DEPTH GUIDE	420
038	231665-9	TORSION SPRING 7	50
039	419630-0	LOCK LEVER	160
040	251867-1	SCREW M5X30	150
041	941101-4	FLAT WASHER 5	20
042	419623-7	STOPPER BLOCK	180
043	266034-5	TAPPING SCREW CT 4X16	50
044	345744-8	NUT PLATE	150
045	266034-5	TAPPING SCREW CT 4X16	50
046	419632-6	POSITION PLATE	110
047	158547-9	BLADE CASE COMPLETE	2,920
048	266053-1	TAPPING SCREW 4X35	40
049	253010-8	FLAT WASHER 6	50
050	224406-0	INNER FLANGE 35	570
051	224405-2	OUTER FLANGE 35	630
052	266403-0	HEX. SOCKET HEAD BOLT M6	190
053	318084-7	BLADE CASE COVER	1,880
054	266034-5	TAPPING SCREW CT 4X16	50

ITEM	PARTS ID	DESCRIPTION	PRICE/BAHT
055	188197-6	HANDLE SET	2,570
056	265776-8	THUMB SCREW M6X26	120
057	253111-2	FLAT WASHER 6	40
058	419596-4	REAR ANGULAR GUIDE	330
059	318179-6	BASE	3,620
060	265995-6	TAPPING SCREW 4X18	40
061	324731-0	STOPPER PIN	250
062	252157-5	SQUARE NUT M6	30
063	266085-8	H.S.SET SCREW(FLAT POINT)M6X10	120
064	419595-6	FRONT ANGULAR GUIDE	430
065	419571-0	DIAL 22	70
066	961017-7	STOP RING E-3	20
067	266085-8	H.S.SET SCREW(FLAT POINT)M6X10	120
068	265995-6	TAPPING SCREW 4X18	40
069	253111-2	FLAT WASHER 6	40
070	265776-8	THUMB SCREW M6X26	120
071	912112-6	COUNTERSUNK HEAD SCREW M4X10	30
072	345748-0	LOCK WASHER	120
073	231316-4	COMPRESSION SPRING 7	50
074	265701-9	SCREW M6X14	100
075	419627-9	HOLDER	80
076	265775-0	THUMB SCREW M4X3	180
077	345977-5	PLATE	40
078	253932-2	WAVE WASHER 10	30
079	419621-1	SLIDE LEVER	
080	265775-0	THUMB SCREW M4X3	180
081	419627-9	HOLDER	80
082	231316-4	COMPRESSION SPRING 7	50
083	265701-9	SCREW M6X14	100
084	922232-8	HEX. SOCKET HEAD BOLT M5X20	50
085	324709-3	LOCK PIN 8	230
086	233267-7	COMPRESSION SPRING 7	100
087	419631-8	LOCK PLATE	150
088	687052-4	STRAIN RELIEF	80
089	265995-6	TAPPING SCREW 4X18	40
090	631729-3	CONTROLLER	3,770
091	213261-5	O RING 17	40
092	418905-4	DIAL	110
094	419622-9	SWITCH LEVER	130
095	651922-3	SWITCH TG71B	850
096	345745-6	LINK PLATE	180
097	419629-5	LOCK OFF BUTTON	120
098	233089-5	COMPRESSION SPRING 12	60
099	265995-6	TAPPING SCREW 4X18	40
100	911273-9	PAN HEAD SCREW M5X50	60
102	188197-6	HANDLE SET	2,750
103	666216-3	POWER SUPPLY CORD 1.5-2-2.5	640
104	682503-2	CORD GUARD 8-90	120
105	419626-1	BAFFLE PLATE	150
106	266044-2	TAPPING SCREW 5X60	130
107	525743-8	FIELD ASS'Y 220-240V	
108	158094-0	MOTOR HOUSING COMPLETE	1,540
109	911273-9	PAN HEAD SCREW M5X50	60

SERVICE DRAWING

MODEL NO. SP6000

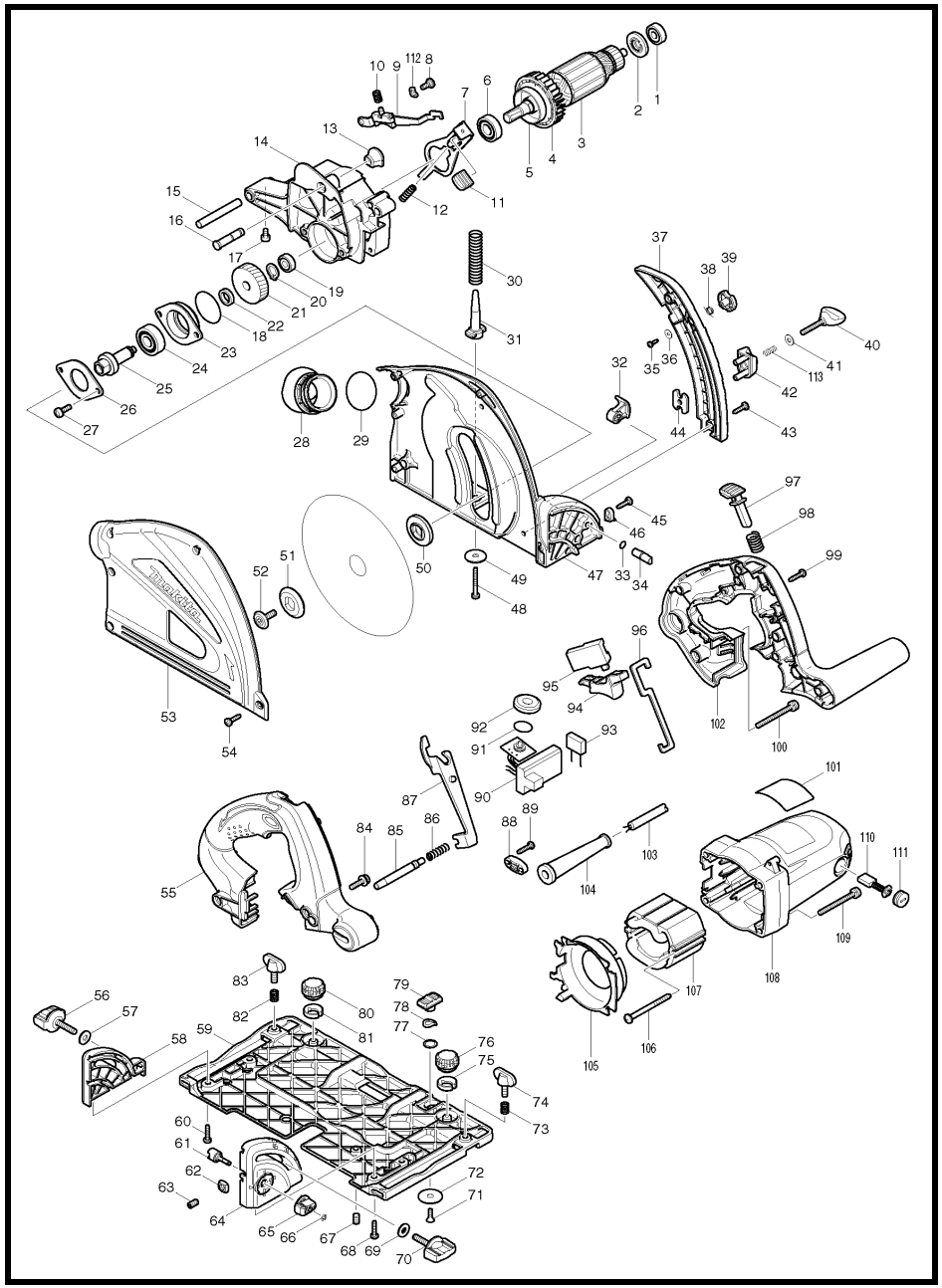

MODEL SP6000

ITEM	PARTS ID	DESCRIPTION	PRICE/BAHT
110	B-80151	CARBON BRUSH SET CB-303A	
110	B-80379	CARBON BRUSH SET CB-303A	190
111	643750-0	BRUSH HOLDER CAP	70
112	267781-1	WAVE WASHER 7	150
113	231372-4	COMPRESSION SPRING 5	80
115	421479-6	RUBBER RING 19	290
116	424047-4	PACKING	70
117	424050-5	SPONGE	50
118	443137-4	FELT	40
A01	B-07353	TCT SAW BLADE 165X20X48T	3,740
A02	783203-8	HEX. WRENCH 5	100
A03	165447-6	SUB BASE	850

SERVICE DRAWING

MODEL NO. TD0100

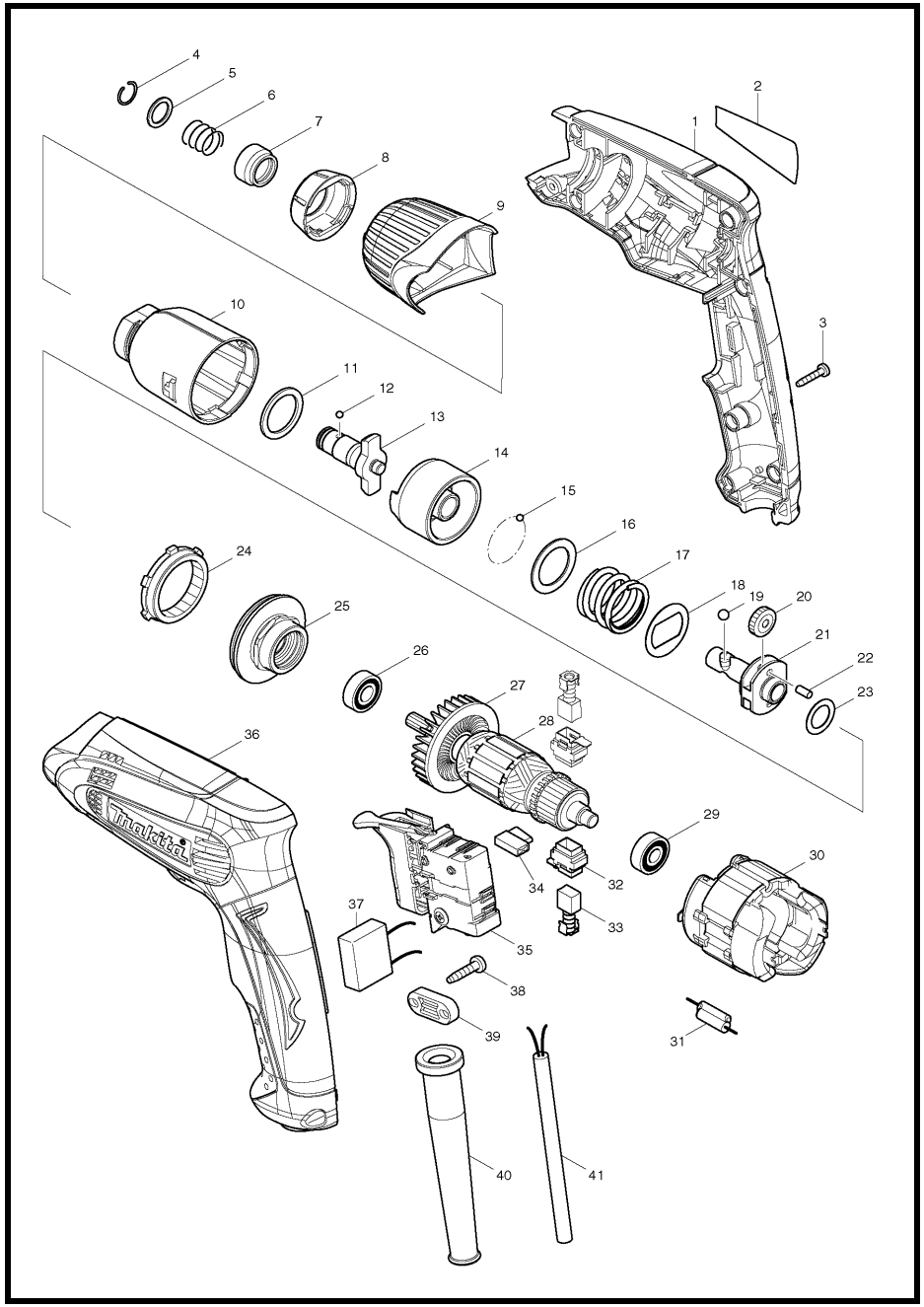

MODEL TD0100

ITEM	PARTS ID	DESCRIPTION	PRICE/BAHT
001	188619-6	HOUSING SET	760
003	266429-2	TAPPING SCREW 3X16	50
004	231965-7	RING SPRING 10	40
005	267143-3	FLAT WASHER 11	110
006	233005-7	COMPRESSION SPRING 13	60
007	324711-6	BIT SLEEVE	180
008	424376-5	BAMPER	190
009	452440-2	HAMMER CASE COVER	190
010	158898-0	HAMMER CASE COMPLETE	480
011	261140-1	NYLON WASHER 20	50
012	216019-1	STEEL BALL 3	20
013	325618-9	ANVIL N	480
014	324894-2	HAMMER	490
015	216019-1	STEEL BALL 3	20
016	267380-9	FLAT WASHER 20	50
017	234096-1	COMPRESSION SPRING 21	90
018	267813-4	WASHER 21	50
019	216002-8	STEEL BALL 4.8	20
020	227213-0	SPUR GEAR 17	90
021	324897-6	SPINDLE	360
022	268217-3	PIN 3.5	50
023	253052-2	FLAT WASHER 12	80
024	227215-6	INTERNAL GEAR 43	200
025	158899-8	BEARING BOX COMPLETE	360
026	210013-5	BALL BEARING 698VV	410
028	517653-3	ARMATURE ASSY 220V	
029	210062-2	BALL BEARING 607ZZ	130
030	635103-7	FIELD 220V	
032	643936-6	BRUSH HOLDER	230
033	B-80422	CARBON BRUSH SET CB-419A	
034	686039-3	RECEPTACLE SLEEVE	30
036	188619-6	HOUSING SET	760
038	266326-2	TAPPING SCREW 4X18	30
039	687124-5	STRAIN RELIEF	70
040	682559-5	CORD GUARD 8	110
041	691065-9	POWER SUPPLY CORD 0.75-2-2.5	690
A01	784203-1	PHILLIPS BIT 2-65	190

SERVICE DRAWING

MODEL NO. TD0101F

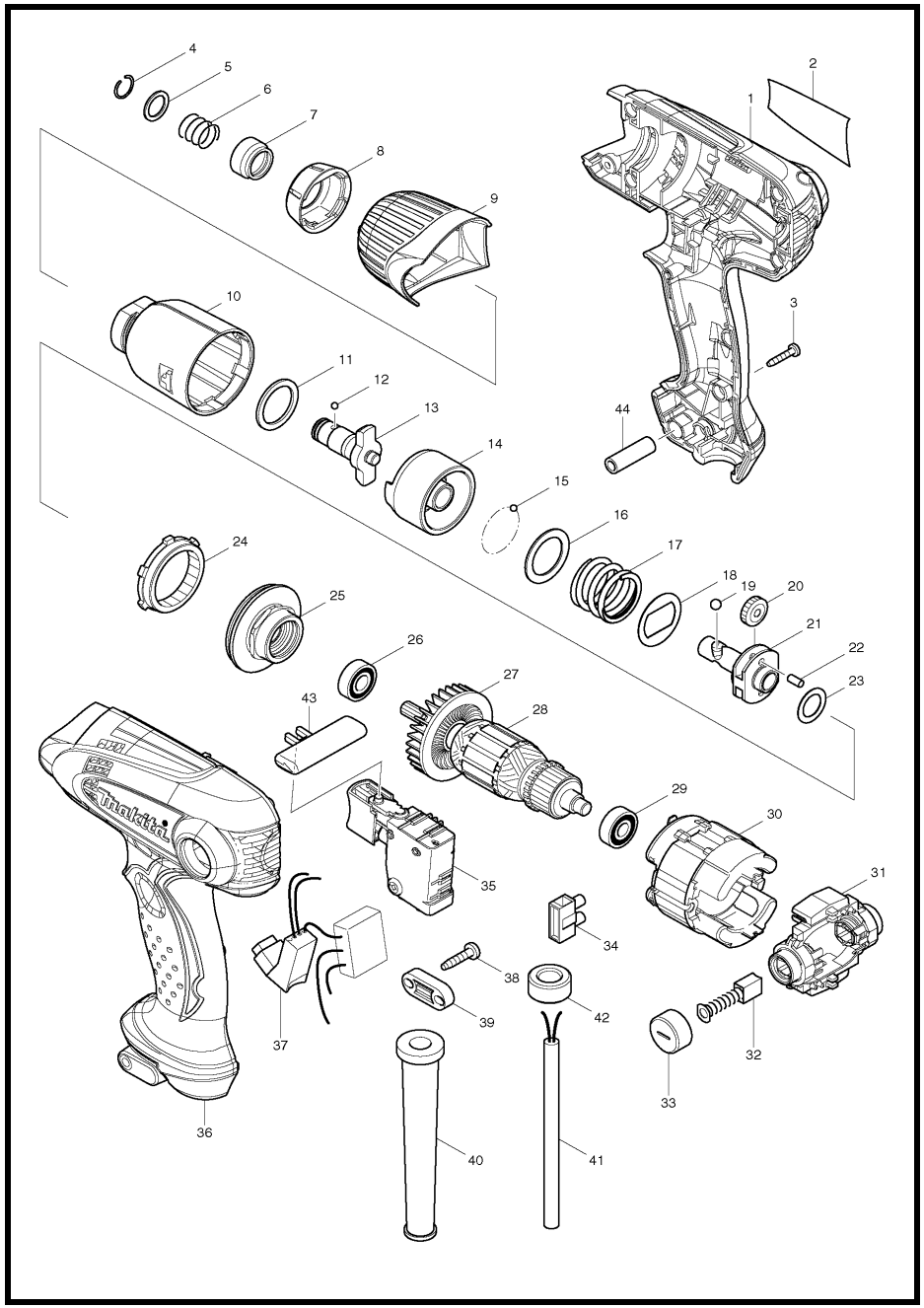

MODEL TD0101F

ITEM	PARTS ID	DESCRIPTION	PRICE/BAHT
001	188664-1	HOUSING SET	930
003	266429-2	TAPPING SCREW 3X16	50
004	231965-7	RING SPRING 10	40
005	267143-3	FLAT WASHER 11	110
006	233005-7	COMPRESSION SPRING 13	60
007	324711-6	BIT SLEEVE	180
008	424376-5	BAMPER	190
009	452440-2	HAMMER CASE COVER	190
010	158898-0	HAMMER CASE COMPLETE	480
011	261140-1	NYLON WASHER 20	50
012	216019-1	STEEL BALL 3	20
013	325618-9	ANVIL N	480
014	324894-2	HAMMER	490
015	216019-1	STEEL BALL 3	20
016	267380-9	FLAT WASHER 20	50
017	234096-1	COMPRESSION SPRING 21	90
018	267813-4	WASHER 21	50
019	216002-8	STEEL BALL 4.8	20
020	227213-0	SPUR GEAR 17	90
021	324897-6	SPINDLE	360
022	268217-3	PIN 3.5	50
023	253052-2	FLAT WASHER 12	80
024	227215-6	INTERNAL GEAR 43	200
025	158899-8	BEARING BOX COMPLETE	360
026	210013-5	BALL BEARING 698VV	410
028	517653-3	ARMATURE ASSY 220V	
029	210062-2	BALL BEARING 607ZZ	130
031	638643-4	HOLDER ARM COMPLETE	540
032	B-80391	CARBON BRUSH SET CB-411A	
033	643928-5	BRUSH HOLDER CAP	100
035	650613-3	SWITCH C3TA	1,090
036	188664-1	HOUSING SET	930
037	631873-6	LIGHT CIRCUIT	560
038	266326-2	TAPPING SCREW 4X18	30
039	687124-5	STRAIN RELIEF	70
040	682559-5	CORD GUARD 8	110
041	691065-9	POWER SUPPLY CORD 0.75-2-2.5	690
043	419250-0	F/R CHANGE LEVER	50
044	262560-2	SLEEVE 5	90
A01	784203-1	PHILLIPS BIT 2-65	190

SERVICE DRAWING

MODEL NO. TD090DW

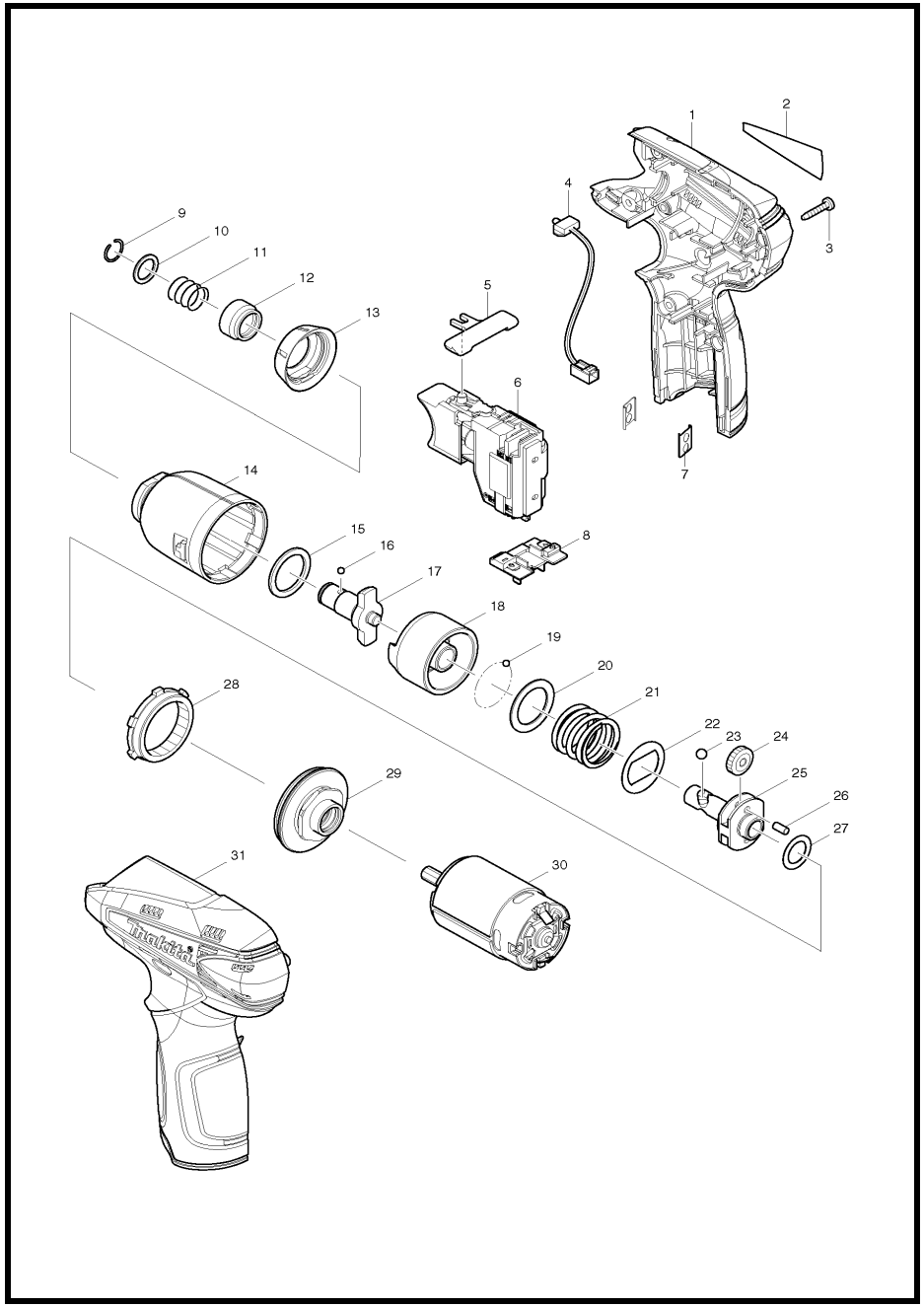

MODEL TD090DW

ITEM	PARTS ID	DESCRIPTION	PRICE/BAHT
001	187160-6	HOUSING SET	530
003	266130-9	TAPPING SCREW BIND PT 3X16	30
004	631813-4	LED CIRCUIT	370
005	450504-6	F/R CHANGE LEVER	50
006	650699-7	SWITCH C3HW-3A-LF1M	1,890
007	345998-7	SET PLATE	50
008	643830-2	TERMINAL	130
009	231965-7	RING SPRING 10	40
010	267143-3	FLAT WASHER 11	110
011	233005-7	COMPRESSION SPRING 13	60
012	324711-6	BIT SLEEVE	180
013	424109-8	BUMPER	190
014	158670-0	HAMMER CASE COMPLETE	400
015	261140-1	NYLON WASHER 20	50
016	216019-1	STEEL BALL 3	20
017	324896-8	ANVIL N	360
018	324894-2	HAMMER	490
019	216019-1	STEEL BALL 3	20
020	267380-9	FLAT WASHER 20	50
021	234064-4	COMPRESSION SPRING 21	50
022	267813-4	WASHER 21	50
023	216002-8	STEEL BALL 4.8	20
024	227213-0	SPUR GEAR 17	90
025	324897-6	SPINDLE	360
026	268217-3	PIN 3.5	50
027	253052-2	FLAT WASHER 12	80
028	227215-6	INTERNAL GEAR 43	200
029	158671-8	BEARING BOX COMPLETE	320
030	629851-8	DC MOTOR	760
031	187160-6	HOUSING SET	530
A01	168467-9	HOLSTER	270
A02	194588-1	DC10WA BATTERY CHARGER	
A03	194550-6	BATTERY BL1013 SET	
A04	784202-3	PHILLIPS BIT 2-45	170

SERVICE DRAWING

MODEL NO. TM3000C

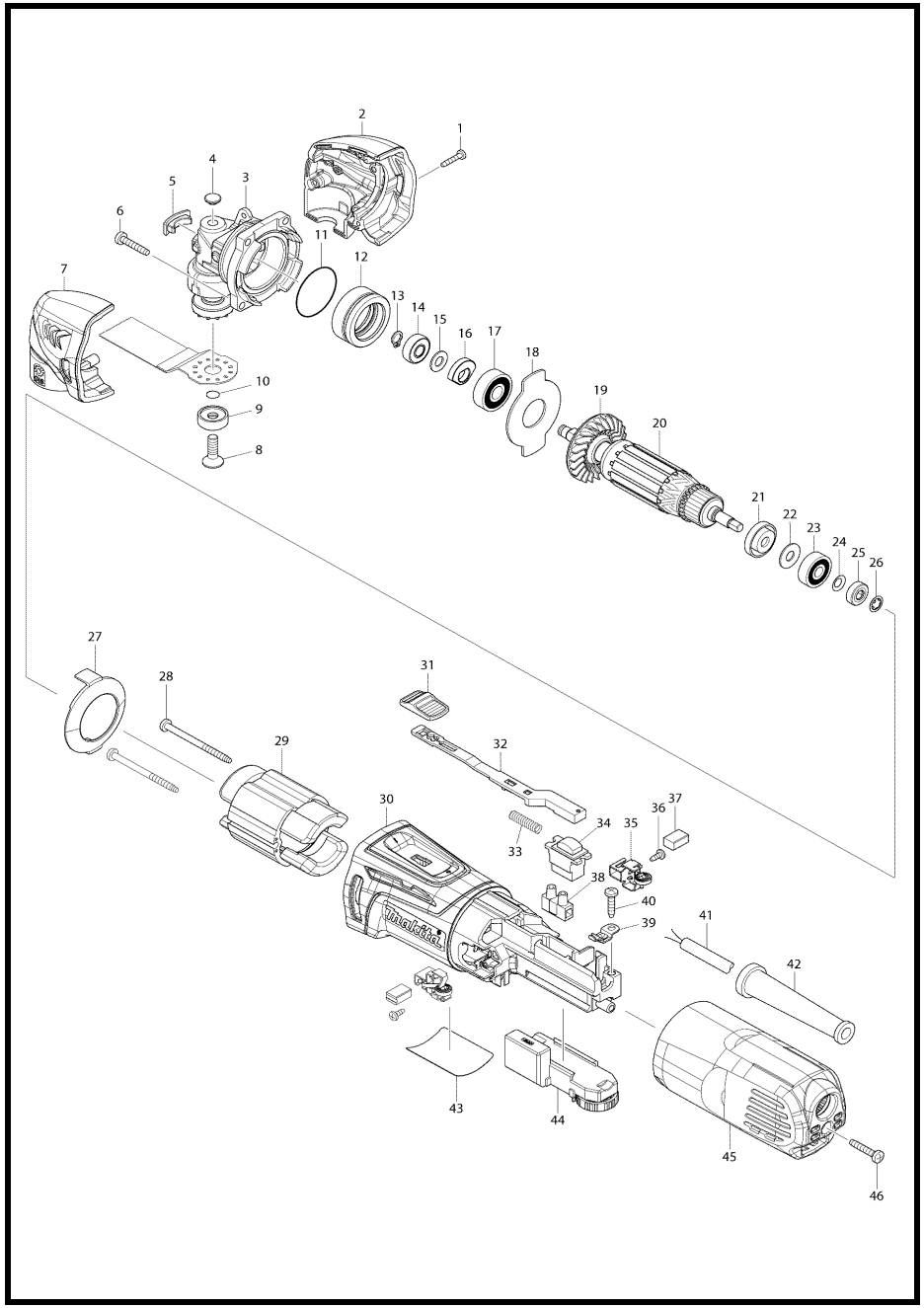

MODEL TM3000C

ITEM	PARTS ID	DESCRIPTION	PRICE/BAHT
001	266429-2	TAPPING SCREW 3X16	50
002	187373-9	HEAD COVER SET	480
003	142075-4	CRANK HOUSING COMPLETE	
004	424511-5	CRANK HOUSING CAP B	30
005	424510-7	CRANK HOUSING CAP A	60
006	266424-2	TAPPING SCREW 4X20	70
007	187373-9	HEAD COVER SET	480
008	266783-4	HEX.SOCKET C.S.H.SCREW M6X20	40
009	224455-7	OUTER FLANGE 22	150
010	213021-5	O RING 5	20
011	213479-8	O RING 33	80
012	326199-6	BEARING BOX	330
013	961003-8	RETAINING RING S-7	20
014	211392-4	SPHERE BEARING 706	1,800
015	253133-2	FLAT WASHER 7	50
016	313245-4	BALANCER	90
017	211092-6	BALL BEARING 629DDW	330
018	285857-2	BEARING RETAINNER	110
020	517683-4	ARMATURE ASSEMBLY 220-240V	
021	681636-0	INSULATION WASHER	60
022	267426-1	FLAT WASHER 7	40
023	210023-2	BALL BEARING 627DDW	210
024	267756-0	WAVE WASHER 6	30
025	688174-3	MAGNET SLEEVE	220
026	259039-2	SELF LOCK 6	20
027	453828-9	BAFFLE PLATE	80
028	266415-3	TAPPING SCREW 4X55	40
029	623558-8	FIELD 220-240V	
030	453823-9	MOTOR HOUSING	780
031	453761-5	SWITCH KNOB	40
032	453825-5	SWITCH LEVER	110
033	234263-8	COMPRESSION SPRING 5	20
034	651609-7	SWITCH SS106A-7-1	610
035	643839-4	BRUSH HOLDER 6X9	130
036	266492-5	TAPPING SCREW 3X8	50
037	195026-6	CARBON BRUSH CB-459	190
038	654532-5	TERMINAL BLOCK 1P	150
039	687682-1	STRAIN RELIEF	50
040	266326-2	TAPPING SCREW 4X18	30
041	691025-1	POWER SUPPLY CORD 0.75-2-5.0	1,070
042	682504-0	CORD GUARD 10-85	190
044	620149-6	CONTROLLER	2,870
045	453824-7	REAR COVER	300
046	266424-2	TAPPING SCREW 4X20	70
A01	410047-0	WRENCH HOLDER 5.6	100
A02	783203-8	HEX. WRENCH 5	100
A06	196271-6	ADAPTER A SET	490
A07	B-21325	SEGMENT SAW BLADE 85 TMA006	1,550
A08	B-21353	PLUNGE CUT SAW BLADE 28 TMA009	1,160
A09	B-21381	PLUNGE CUT SAW BLADE 32 TMA012	900
A10	B-21434	PLUNGE CUT SAW BLADE 10 TMA017	720
A11	B-21456	SCRAPER 52 FLEXIBLE TMA019	720
A12	B-21490	HM SEG SAW BLADE 85 TMA023	2,230
A13	B-21624	ABRASIVEPAPER DELTA RED 60	280
A14	B-22947	ABRASIVEPAPER DELTA RED 100	270
A15	B-22953	ABRASIVEPAPER DELTA RED 150	270
A16	B-21537	SANDING PAD	860
A17	821538-0	TOOL BOX	440

SERVICE DRAWING

MODEL NO. TW0200

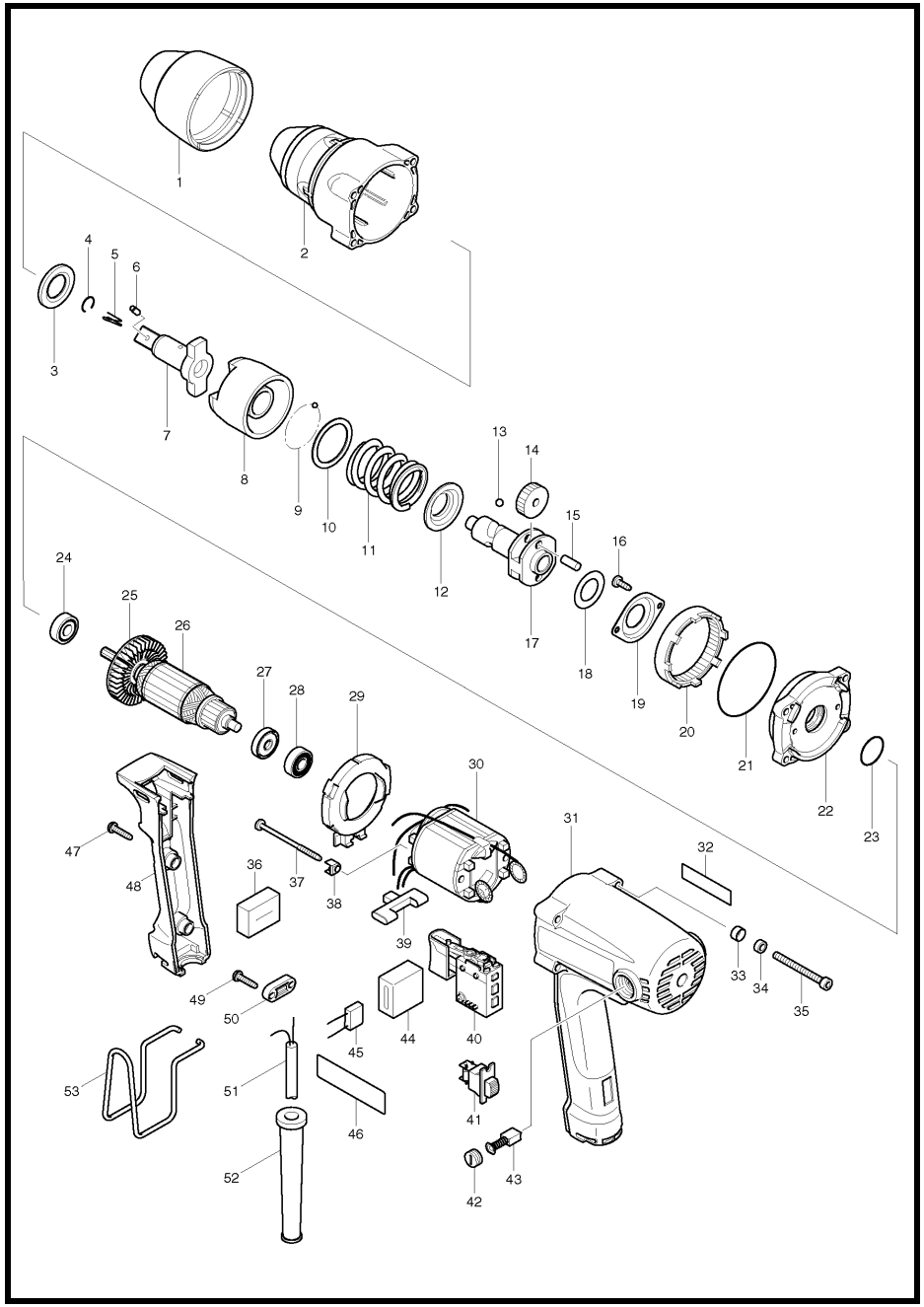

MODEL TW0200

ITEM	PARTS ID	DESCRIPTION	PRICE/BAHT
001	421839-2	BUMPER	190
002	153581-4	HAMMER CASE COMPLETE	2,030
003	267268-3	FLAT WASHER 19	130
004	231907-1	RING SPRING 10	50
007	324344-7	ANVIL	1,810
008	324341-3	HAMMER	1,960
009	216001-0	STEEL BALL 3.5	20
010	267269-1	FLAT WASHER 32	130
011	233377-0	COMPRESSION SPRING 30	230
012	267777-2	CUP WASHER 19	110
013	216007-8	STEEL BALL 6.4	30
014	227092-6	SPUR GEAR 32	520
015	256002-6	PIN 6	80
016	266026-4	TAPPING SCREW BIND CT 4X12	30
017	324339-0	SPINDLE	2,030
018	253794-8	FLAT WASHER 18	80
019	285709-7	BEARING RETAINER 44	150
020	227093-4	INTERNAL GEAR 71	520
021	213670-8	O RING 58	100
022	153583-0	INTERNAL GEAR COVER COMPLETE	680
023	213373-4	O RING 22	50
024	210005-4	BALL BEARING 608DDW	240
026	517448-4	ARMATURE ASS'Y 220-240V	
027	681652-2	INSULATION WASHER	60
028	211021-9	BALL BEARING 607LLB	240
029	418187-8	BAFFLE PLATE	130
030	593563-8	FIELD ASS'Y 220-240V	
031	140021-1	MOTOR HOUSING COMPLETE	2,220
032	819063-3	MAKITA LABEL	30
033	253929-1	CUP WASHER 5	80
034	262001-8	URETHANE RING 5	150
035	266331-9	HEX. SOCKET HEAD BOLT M5X50	80
037	266091-3	TAPPING SCREW 4X50	40
038	417237-6	INSULATION COVER	100
039	418186-0	F/L CHANGE LEVER	190
040	650523-4	SWITCH C3MA-DB	2,140
042	643550-8	BRUSH HOLDER CAP 5-8	100
043	B-80391	CARBON BRUSH SET CB-411A	
047	265995-6	TAPPING SCREW 4X18	40
048	418189-4	HANDLE COVER	440
049	265995-6	TAPPING SCREW 4X18	40
050	687053-2	STRAIN RELIEF	70
051	691015-4	POWER SUPPLY CORD 0.75-2-2.5	740
052	682566-8	CORD GUARD 10	80
053	324284-9	HOOK	320
A01	134841-3	SOCKET 24-45 ASS'Y	600

SERVICE DRAWING

MODEL NO. TW0350

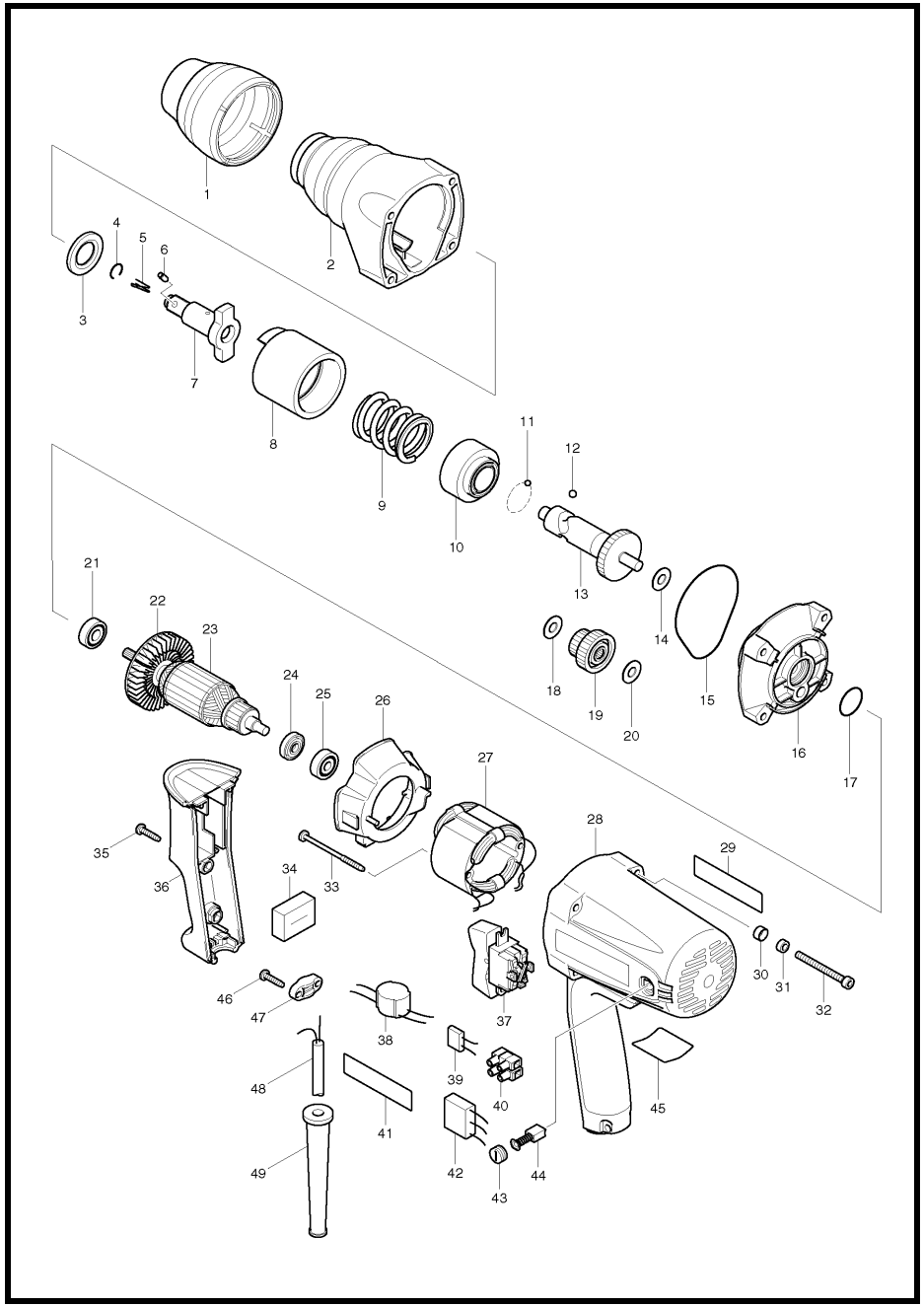

MODEL TW0350

ITEM	PARTS ID	DESCRIPTION	PRICE/BAHT
001	421837-6	BUMPER	190
002	153623-4	HAMMER CASE COMPLETE	2,880
003	267268-3	FLAT WASHER 19	130
004	231907-1	RING SPRING 10	50
007	324406-1	ANVIL	2,450
008	324336-6	HAMMER	2,440
009	233383-5	COMPRESSION SPRING 28	230
010	313115-7	SPRING HOLDER	600
011	216008-6	STEEL BALL 4	20
012	216007-8	STEEL BALL 6.4	30
013	324338-2	SPINDLE	2,570
014	253139-0	FLAT WASHER 8	50
015	421838-4	SEAL RING	80
016	153624-2	HAMMER CASE COVER COMPLETE	1,460
017	213373-4	O RING 22	50
018	253139-0	FLAT WASHER 8	50
019	153626-8	SPUR GEAR 19-41 COMPLETE	1,190
020	253139-0	FLAT WASHER 8	50
021	210024-0	BALL BEARING 608LLU	240
023	515263-0	ARMATURE ASS'Y 220-240V	
024	681614-0	INSULATION WASHER	80
025	210025-8	BALL BEARING 627LLB	250
026	418180-2	BAFFLE PLATE	150
028	153625-0	MOTOR HOUSING	2,140
030	253929-1	CUP WASHER 5	80
031	262001-8	URETHANE RING 5	150
032	266331-9	HEX. SOCKET HEAD BOLT M5X50	80
033	266091-3	TAPPING SCREW 4X50	40
035	265995-6	TAPPING SCREW 4X18	40
036	418179-7	HANDLE COVER	370
037	651572-4	SWITCH SL220SD-19	1,490
043	643550-8	BRUSH HOLDER CAP 5-8	100
044	B-80391	CARBON BRUSH SET CB-411A	
046	265995-6	TAPPING SCREW 4X18	40
047	687053-2	STRAIN RELIEF	70
048	691015-4	POWER SUPPLY CORD 0.75-2-2.5	740
049	682566-8	CORD GUARD 10	80
A02	134841-3	SOCKET 24-45 ASS'Y	600

SERVICE DRAWING

MODEL NO. TW1000

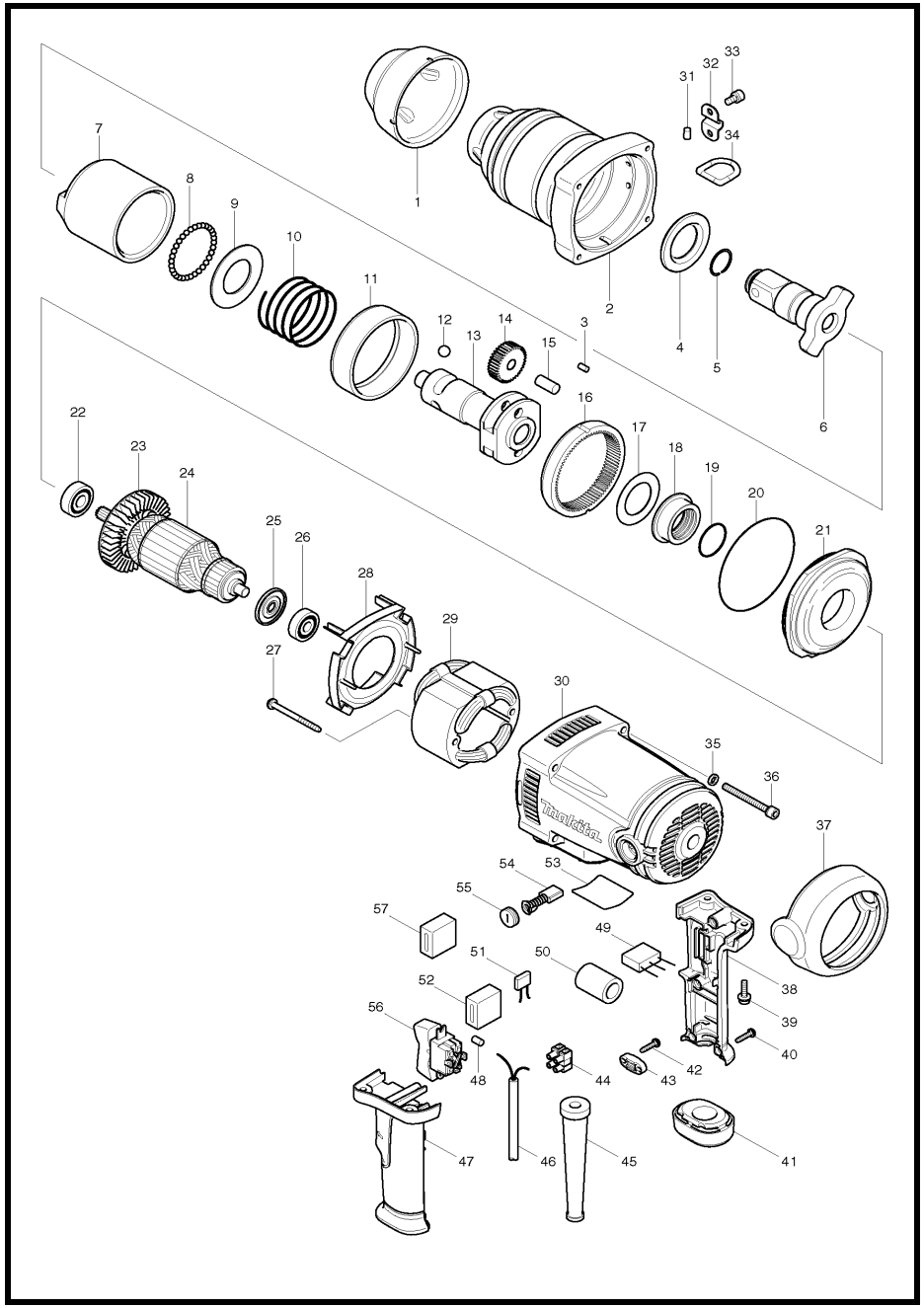

MODEL TW1000

ITEM	PARTS ID	DESCRIPTION	PRICE/BAHT
001	421895-2	FRONT BUMPER	660
002	154555-8	HAMMER CASE COMPLETE	8,630
003	256253-1	PIN 5	60
004	253909-7	FLAT WASHER 35	690
005	231921-7	RING SPRING 22	100
006	325587-4	ANVIL	8,350
007	325415-3	HAMMER	10,190
008	216002-8	STEEL BALL 4.8	20
009	253712-6	FLAT WASHER 36	290
010	231211-8	COMPRESSION SPRING 36	870
011	333112-7	RING 79	1,890
012	216010-9	STEEL BALL 10.3	80
013	324666-5	SPINDLE	6,550
014	227149-3	SPUR GEAR 37	970
015	256051-3	PIN 10	190
016	221815-4	INTERNAL GEAR 82	6,570
017	267170-0	FLAT WASHER 34	210
018	310154-8	BEARING BOX	1,520
019	213459-4	O RING 32	50
020	213855-6	O RING 95	150
021	317841-0	HAMMER CASE COVER	1,700
022	211137-0	BALL BEARING 6201LLU	380
024	516918-0	ARMATURE ASS'Y 220V	
025	681665-3	INSULATION WASHER	90
026	211066-7	BALL BEARING 6200LLB	410
027	265345-5	+ HEX. BOLT M5X60	130
028	418814-7	BAFFLE PLATE	380
029	526148-5	FIELD ASS'Y 220V	
030	154556-6	MOTOR HOUSING COMPLETE	3,400
031	263005-3	RUBBER PIN 6	30
032	345517-9	PLATE	180
033	266157-9	HEX. SOCKET HEAD BOLT M6X12	80
034	282018-5	D-RING	390
035	941151-9	FLAT WASHER 6	30
036	265538-4	HEX.SOCKET HEAD BOLT M6X60	190
037	421896-0	REAR BUMPER	530
038	183935-1	HANDLE SET	1,810
039	911233-1	PAN HEAD SCREW M5X20	30
040	265995-6	TAPPING SCREW 4X18	40
041	421897-8	BUMPER	360
042	265995-6	TAPPING SCREW 4X18	40
043	687053-2	STRAIN RELIEF	70
044	654531-7	TERMINAL BLOCK 2P	190
045	682564-2	CORD GUARD	150
046	691015-4	POWER SUPPLY CORD 0.75-2-2.5	740
047	183935-1	HANDLE SET	1,810
048	263005-3	RUBBER PIN 6	30
052	685725-3	SPONGE SHEET	40
054	B-80329	CARBON BRUSH SET CB-153A	
055	643650-4	BRUSH HOLDER CAP 6.5-13.5	70
A01	122727-3	SIDE GRIP ASS'Y	1,500
A02	134872-2	SOCKET 41-80 ASS'Y	1,770
A03	213570-2	O-RING 44	190
A04	256284-0	PIN 5	210

SERVICE DRAWING

MODEL NO. TW100D

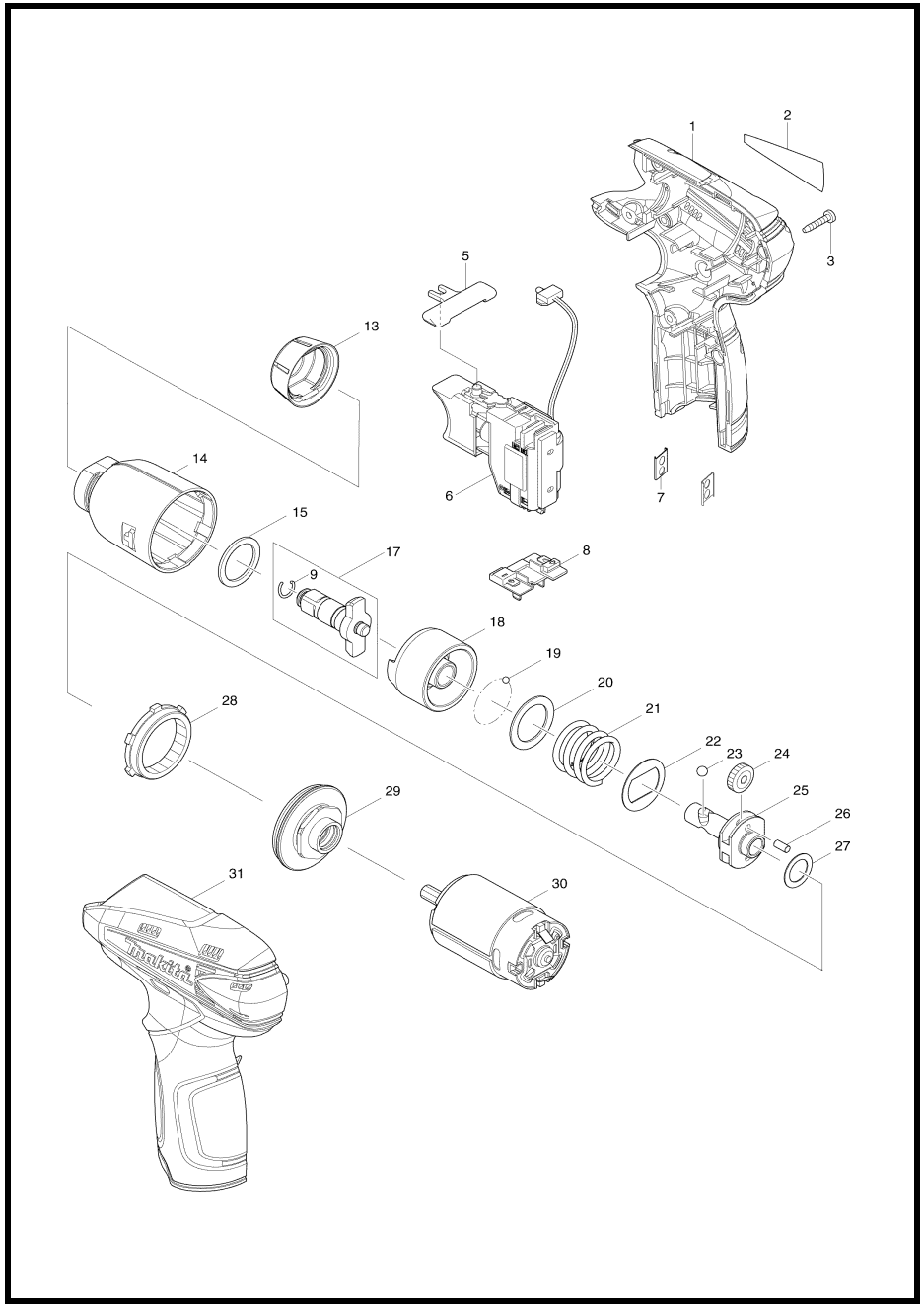

MODEL TW100D

ITEM	PARTS ID	DESCRIPTION	PRICE/BAHT
001	187347-0	HOUSING SET	670
003	266429-2	TAPPING SCREW 3X16	50
005	450504-6	F/R CHANGE LEVER	50
006	650691-3	SWITCH C3HW-3A-EF1M	2,170
007	345998-7	SET PLATE	50
008	643830-2	TERMINAL	130
009	231964-9	RING SPRING 7	140
013	424428-2	BUMPER	120
014	140929-9	HAMMER CASE COMPLETE	620
015	261140-1	NYLON WASHER 20	50
017	135473-9	ANVIL ASSEMBLY	600
018	324894-2	HAMMER	490
019	216019-1	STEEL BALL 3	20
020	267380-9	FLAT WASHER 20	50
021	234217-5	COMPRESSION SPRING 21	90
022	267813-4	WASHER 21	50
023	216002-8	STEEL BALL 4.8	20
024	227213-0	SPUR GEAR 17	90
025	324897-6	SPINDLE	360
026	268217-3	PIN 3.5	50
027	253052-2	FLAT WASHER 12	80
028	227215-6	INTERNAL GEAR 43	200
029	158671-8	BEARING BOX COMPLETE	320
030	629904-3	DC MOTOR	690
031	187347-0	HOUSING SET	670
032	268284-8	PIN 1.5	20
033	263038-8	RUBBER PIN 6	90
034	533020-4	LEAD ASS'Y	160
035	533019-9	LEAD ASS'Y	170
A01	194588-1	DC10WA BATTERY CHARGER	3,150
A02	194550-6	BATTERY BL1013 SET	

SERVICE DRAWING

MODEL NO. UB1100

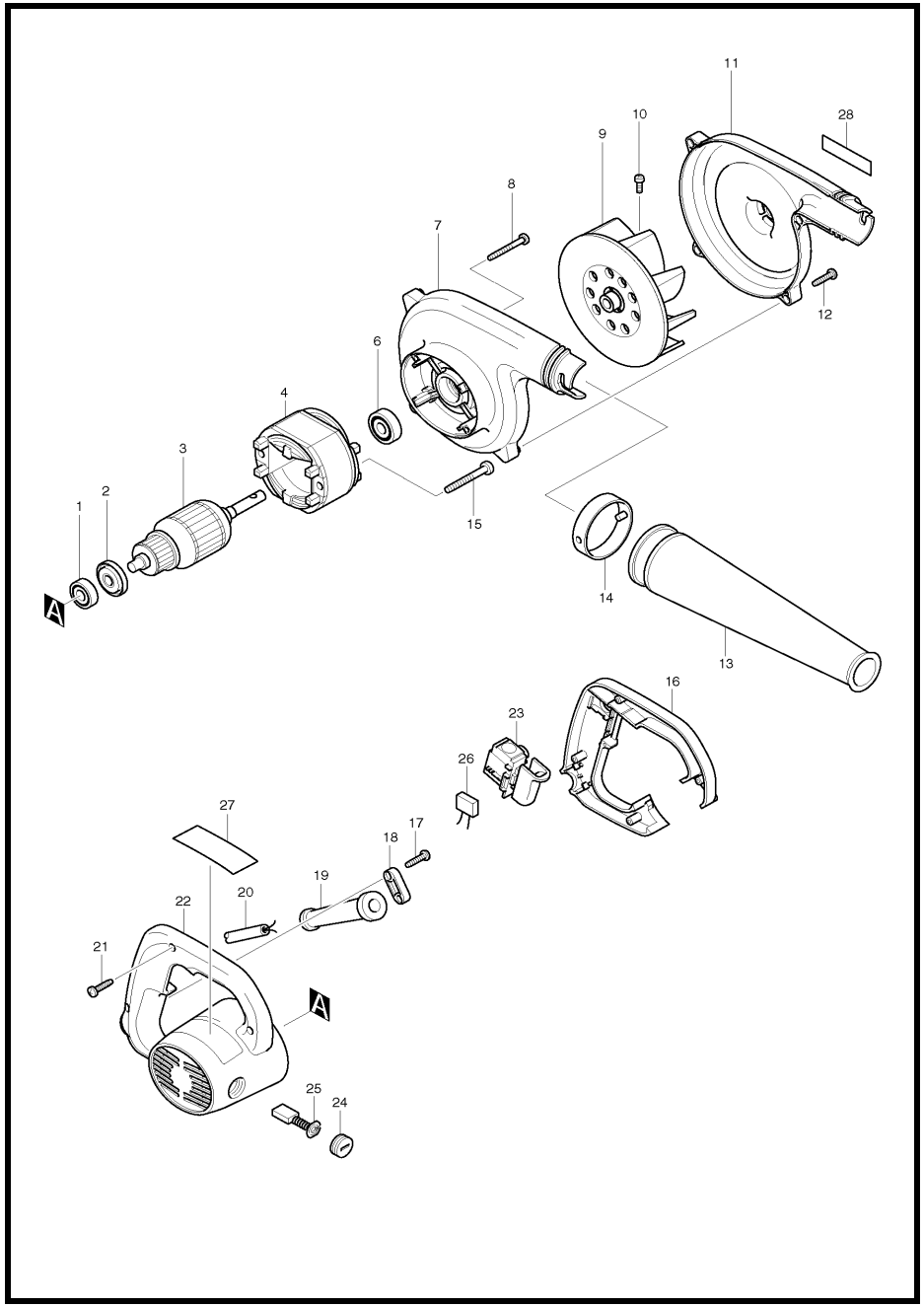

MODEL UB1100

ITEM	PARTS ID	DESCRIPTION	PRICE/BAHT
001	210005-4	BALL BEARING 608DDW	240
002	681644-1	INSULATION WASHER	60
003	516478-2	ARMATURE ASS'Y 220-240V	
004	594438-4	FIELD ASS'Y 220-240V	
006	211092-6	BALL BEARING 629DDW	330
007	152902-7	FAN HOUSING COMPLETE	610
008	266053-1	TAPPING SCREW 4X35	40
009	241888-1	FAN 110	690
010	911117-3	PAN HEAD SCREW M4X12	30
011	417655-8	FAN COVER	460
012	265995-6	TAPPING SCREW 4X18	40
013	132025-7	NOZZLE ASS'Y	460
014	414145-2	JOINT	130
015	266211-9	TAPPING SCREW 5X40	60
016	417657-4	HANDLE COVER	410
017	265995-6	TAPPING SCREW 4X18	40
018	687053-2	STRAIN RELIEF	70
019	682504-0	CORD GUARD 10-85	190
020	691015-4	POWER SUPPLY CORD 0.75-2-2.5	740
021	265995-6	TAPPING SCREW 4X18	40
022	152903-5	MOTOR HOUSING COMPLETE	1,190
023	651359-4	SWITCH TG813TB-3	990
024	643755-0	HOLDER CAP	100
025	B-80379	CARBON BRUSH SET CB-303A	190
A01	122321-1	DUST BAG ASS'Y	940

SERVICE DRAWING

MODEL NO. UB1101

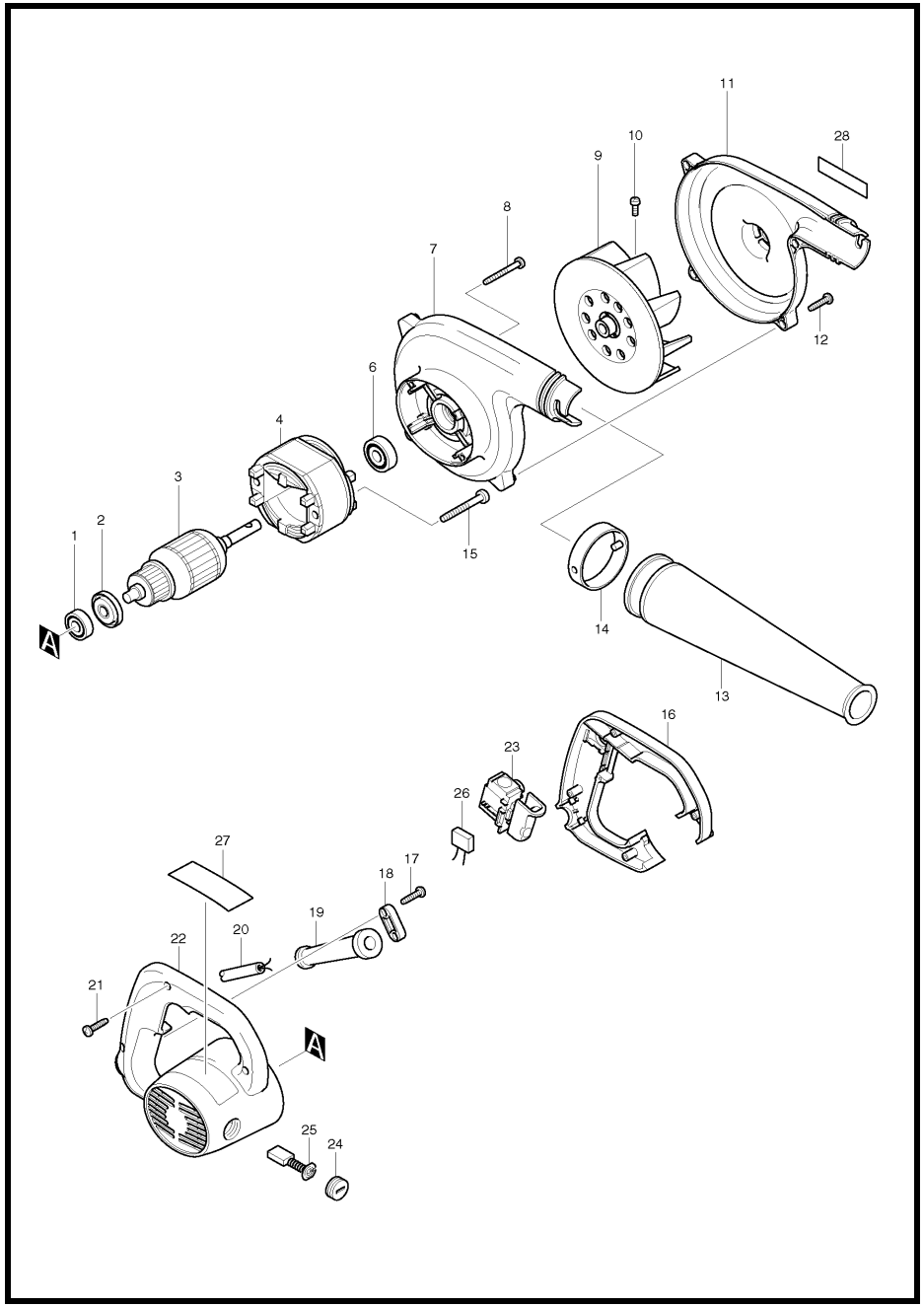

MODEL UB1101

ITEM	PARTS ID	DESCRIPTION	PRICE/BAHT
001	210005-4	BALL BEARING 608DDW	240
002	681644-1	INSULATION WASHER	60
003	516478-2	ARMATURE ASS'Y 220-240V	
004	594438-4	FIELD ASS'Y 220-240V	
006	211092-6	BALL BEARING 629DDW	330
007	152902-7	FAN HOUSING COMPLETE	610
008	266053-1	TAPPING SCREW 4X35	40
009	241888-1	FAN 110	690
010	911117-3	PAN HEAD SCREW M4X12	30
011	417655-8	FAN COVER	460
012	265995-6	TAPPING SCREW 4X18	40
013	132025-7	NOZZLE ASS'Y	460
014	414145-2	JOINT	130
015	266211-9	TAPPING SCREW 5X40	60
016	417657-4	HANDLE COVER	410
017	265995-6	TAPPING SCREW 4X18	40
018	687053-2	STRAIN RELIEF	70
019	682504-0	CORD GUARD 10-85	190
020	691015-4	POWER SUPPLY CORD 0.75-2-2.5	740
021	265995-6	TAPPING SCREW 4X18	40
022	152903-5	MOTOR HOUSING COMPLETE	1,190
023	651298-8	SWITCH TG813AB-1	1,830
024	643755-0	HOLDER CAP	100
025	B-80379	CARBON BRUSH SET CB-303A	190
A01	122321-1	DUST BAG ASS'Y	940

SERVICE DRAWING

MODEL NO. UB1102

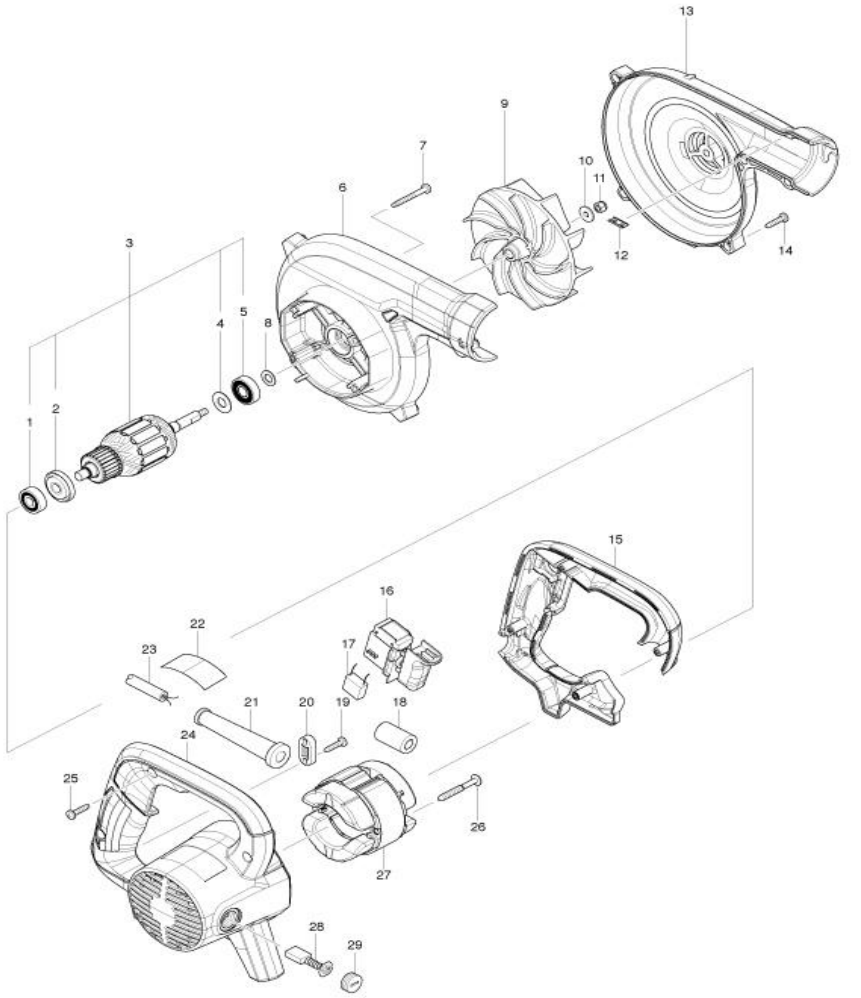

MODEL UB1102

ITEM	PARTS ID	DESCRIPTION	PRICE/BAHT
001	210044-4	BALL BEARING 608DDW	130
002	681644-1	INSULATION WASHER	60
003	513903-4	ARMATURE ASS'Y 220V	
004	267237-4	FLAT WASHER 9	100
005	211491-2	BALL BEARING 609DDW	210
006	142292-6	FAN HOUSING COMPLETE	530
007	266351-3	TAPPING SCREW 4X35	30
008	267240-5	FLAT WASHER 8	100
009	240148-8	FAN 110	
010	267294-2	FLAT WASHER 5	70
011	252103-8	HEX. LOCK NUT M5-8	110
012	345998-7	SET PLATE	50
013	454702-4	FAN COVER	460
014	266326-2	TAPPING SCREW 4X18	30
015	454700-8	HANDLE COVER	370
016	651359-4	SWITCH TG813TB-3	990
019	266326-2	TAPPING SCREW 4X18	30
020	687140-7	STRAIN RELIEF	40
021	682504-0	CORD GUARD 10-85	190
023	691015-4	POWER SUPPLY CORD 0.75-2-2.5	740
024	142291-8	MOTOR HOUSING COMPLETE	1,090
024	643708-9	BRUSH HOLDER 5-11	230
025	266326-2	TAPPING SCREW 4X18	30
026	266211-9	TAPPING SCREW 5X40	60
027	594633-6	FIELD ASS'Y 220V	
027	654020-2	RING TERMINAL	50
027	654501-6	CONNECTOR P-1.25	40
028	B-80379	CARBON BRUSH SET CB-303A	190
029	643750-0	BRUSH HOLDER CAP 7-11	70
A01	123245-4	NOZZLE ASS'Y	340
A01	454703-2	JOINT	70
A02	123241-2	DUST BAG ASSEMBLY	620
A02	410602-8	FASTENER	60

SERVICE DRAWING

MODEL NO. UB1103

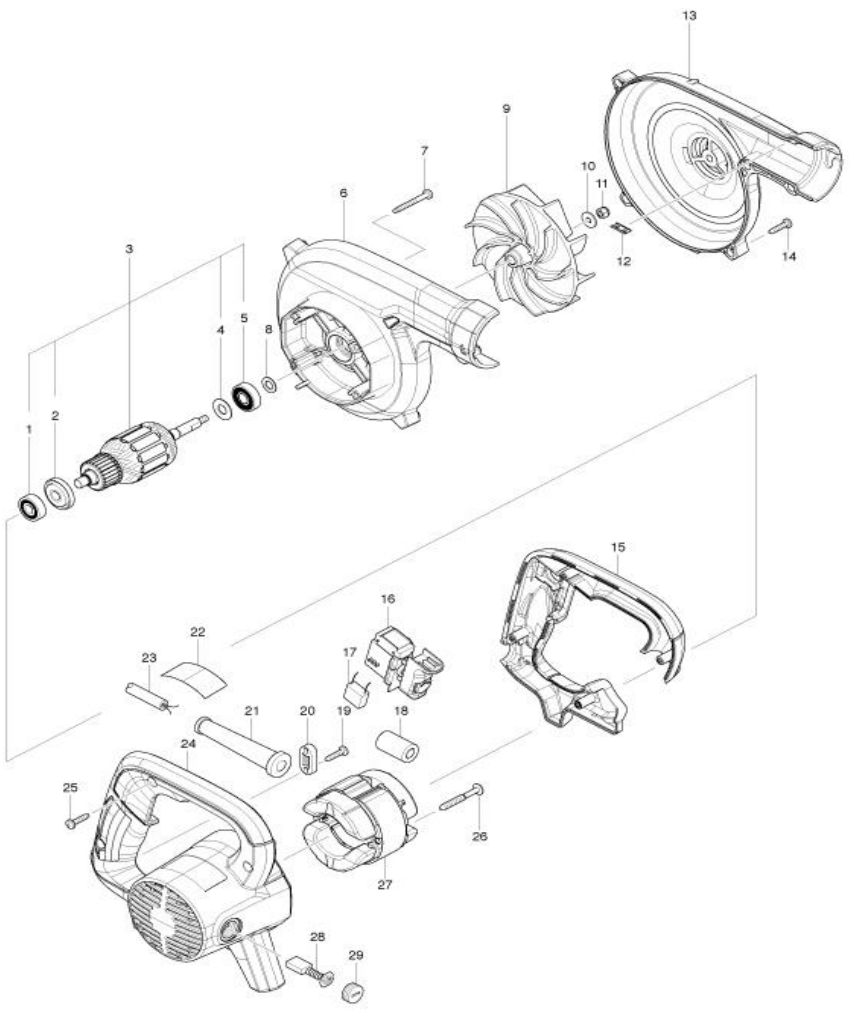

MODEL UB1103

ITEM	PARTS ID	DESCRIPTION	PRICE/BAHT
001	210044-4	BALL BEARING 608DDW	130
002	681644-1	INSULATION WASHER	60
003	513903-4	ARMATURE ASS'Y 220V	
004	267237-4	FLAT WASHER 9	100
005	211491-2	BALL BEARING 609DDW	210
006	142292-6	FAN HOUSING COMPLETE	530
007	266351-3	TAPPING SCREW 4X35	30
008	267240-5	FLAT WASHER 8	100
010	267294-2	FLAT WASHER 5	70
011	252103-8	HEX. LOCK NUT M5-8	110
012	345998-7	SET PLATE	50
013	454702-4	FAN COVER	460
014	266326-2	TAPPING SCREW 4X18	30
015	454700-8	HANDLE COVER	370
016	651298-8	SWITCH TG813AB-1	1,830
019	266326-2	TAPPING SCREW 4X18	30
020	687140-7	STRAIN RELIEF	40
021	682504-0	CORD GUARD 10-85	190
023	691015-4	POWER SUPPLY CORD 0.75-2-2.5	740
024	142291-8	MOTOR HOUSING COMPLETE	1,090
024	643708-9	BRUSH HOLDER 5-11	230
025	266326-2	TAPPING SCREW 4X18	30
026	266211-9	TAPPING SCREW 5X40	60
027	594633-6	FIELD ASS'Y 220V	
027	654020-2	RING TERMINAL	50
027	654501-6	CONNECTOR P-1.25	40
028	B-80379	CARBON BRUSH SET CB-303A	190
029	643750-0	BRUSH HOLDER CAP 7-11	70
A01	123245-4	NOZZLE ASS'Y	340
A01	454703-2	JOINT	70
A02	123241-2	DUST BAG ASSEMBLY	620
A02	410602-8	FASTENER	60

SERVICE DRAWING

MODEL NO. UH200D

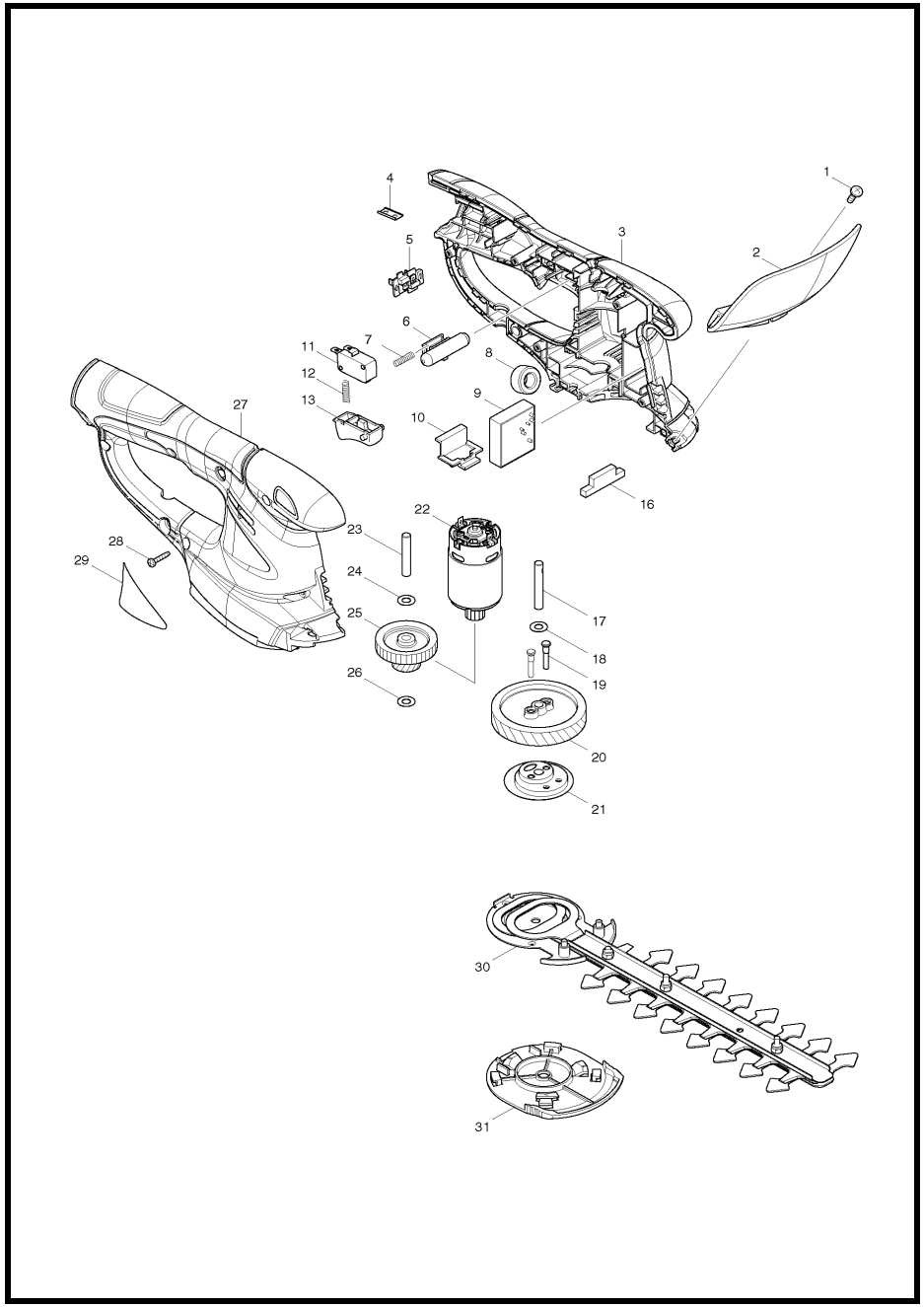

MODEL UH200D

ITEM	PARTS ID	DESCRIPTION	PRICE/BAHT
001	915116-7	BINDING HEAD SCREW M4X12	20
002	140599-4	PROTECTOR COMPLETE	
003	188830-0	HOUSING SET	920
004	345998-7	SET PLATE	50
005	643817-4	TERMINAL	130
006	452438-9	LOCK OFF BUTTON	60
007	231473-8	COMPRESSION SPRING 4	50
009	135384-8	CONTROLLER ASSY	1,930
010	451812-8	LOCK LEVER	60
011	651944-3	SWITCH DMC-1115-13	200
012	231473-8	COMPRESSION SPRING 4	50
013	417564-1	SWITCH LEVER	40
016	451814-4	DUST GUARD	40
017	268254-7	PIN 6	90
018	261122-3	WASHER 6	40
019	268256-3	PIN 4	90
020	227728-7	HELICAL GEAR 47	140
021	165609-6	CRANK COMPLETE	360
022	629877-0	DC MOTOR	620
023	268076-5	PIN 6	70
024	261122-3	WASHER 6	40
025	226831-1	GEAR 12-31	130
026	261122-3	WASHER 6	40
027	188830-0	HOUSING SET	920
028	266429-2	TAPPING SCREW 3X16	50
029	867914-4	UH200D NAME PLATE	
030	195178-3	SHEAR BLADE ASSEMBLY SET	2,400
031	140451-6	UNDER COVER COMPLETE	150
A01	451816-0	BLADE COVER	220
A02	195278-9	CHIP RECEIVER SET	420
A03	194588-1	DC10WA BATTERY CHARGER	3,150
A04	194550-6	BATTERY BL1013 SET	
A05	195176-7	SHEAR BLADE ASSEMBLY SET	3,710
A06	325896-1	BASE FRAME	450
A07	451813-6	CHANGE LEVER	90
A08	452055-5	BLADE COVER	320
A09	452198-3	STORAGE CASE	180

SERVICE DRAWING

MODEL NO. UH4261

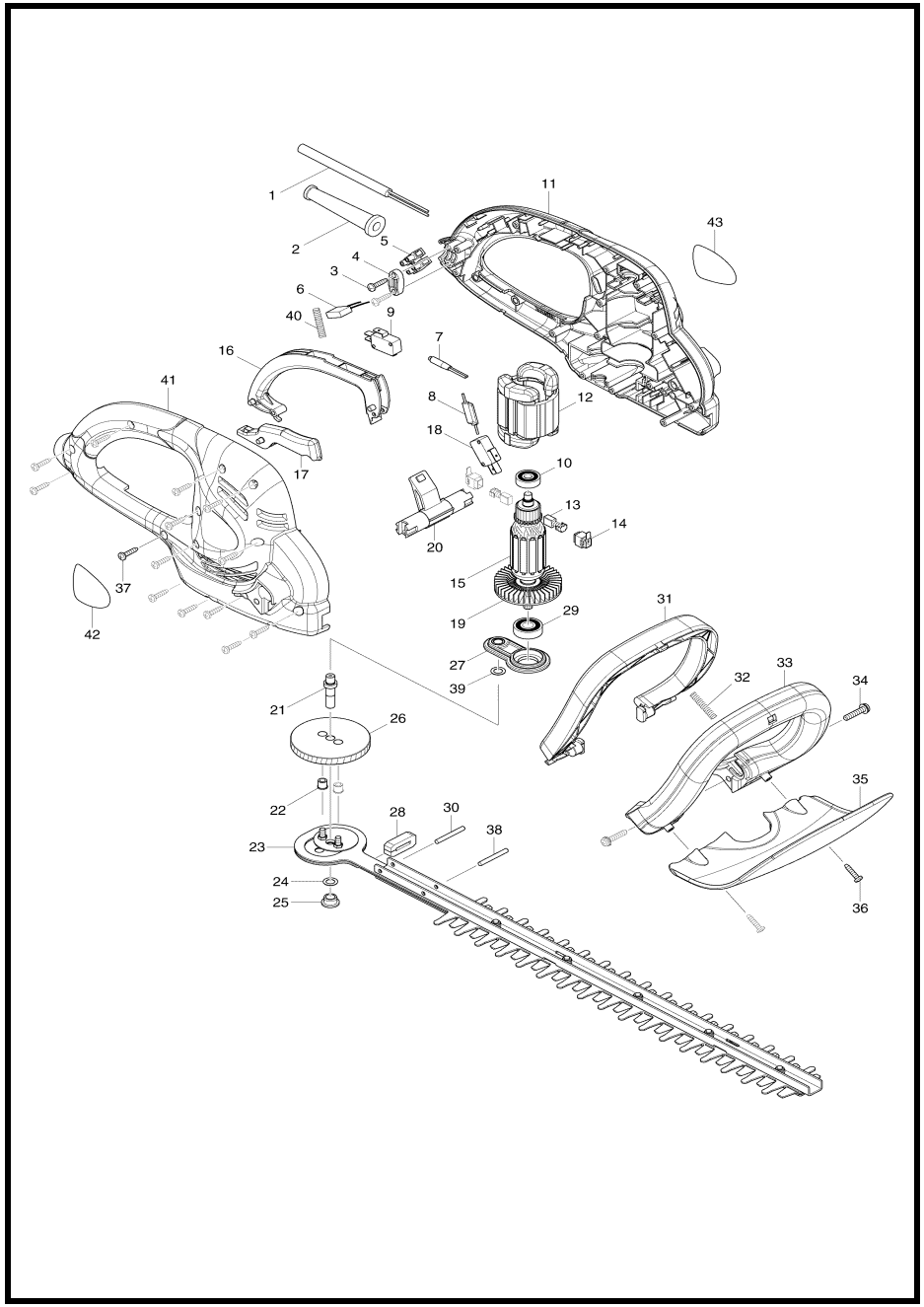

MODEL UH4261

ITEM	PARTS ID	DESCRIPTION	PRICE/BAHT
001	668160-0	POWER SUPPLY CORD 0.75-2-0.3	
002	682569-2	CORD GUARD 8-85	110
003	266326-2	TAPPING SCREW 4X18	30
004	687124-5	STRAIN RELIEF	70
005	654531-7	TERMINAL BLOCK 2P	190
009	650642-6	SWITCH	220
010	210030-5	BALL BEARING 627ZZ	150
011	187052-9	HOUSING SET	770
012	621753-4	FIELD 220-240V	
014	643923-5	BRUSH HOLDER	130
015	515823-8	ARMATURE ASS'Y 220V	
016	452677-1	SWITCH LEVER A	150
017	452680-2	SWITCH LEVER C	80
018	650642-6	SWITCH	220
019	241850-6	FAN 60	210
020	452681-0	SWITCH ARM	130
021	326034-8	SPINDLE	180
022	262570-9	NYLON SLEEVE 5	50
023	140826-9	SHEAR BLADE COMPLETE	3,020
024	253777-8	FLAT WASHER 8	80
025	214064-0	PLANE BEARING 8	60
026	227745-7	HELICAL GEAR 67	480
027	140828-5	BEARING BOX COMPLETE	380
028	423417-4	DUST GUARD	110
029	211062-5	BALL BEARING 6000ZZ	360
030	268136-3	PIN 4	90
031	452678-9	SWITCH LEVER B	170
032	233156-6	COMPRESSION SPRING 5	20
033	452682-8	FRONT GRIP	360
034	911243-8	PAN HEAD SCREW M5X25	30
035	140829-3	PROTECTOR COMPLETE	310
036	266326-2	TAPPING SCREW 4X18	30
037	266326-2	TAPPING SCREW 4X18	30
038	268136-3	PIN 4	90
039	253777-8	FLAT WASHER 8	80
040	233156-6	COMPRESSION SPRING 5	20
041	187052-9	HOUSING SET	770
A01	194677-2	CORD HOLDER COMPLETE SET	190
A02	158024-1	HOOK COMPLETE	170
A03	452683-6	BLADE COVER	320
A04	661905-5	EXTENSION CORD 0.75-2-10.0	930

SERVICE DRAWING

MODEL NO. UH4861

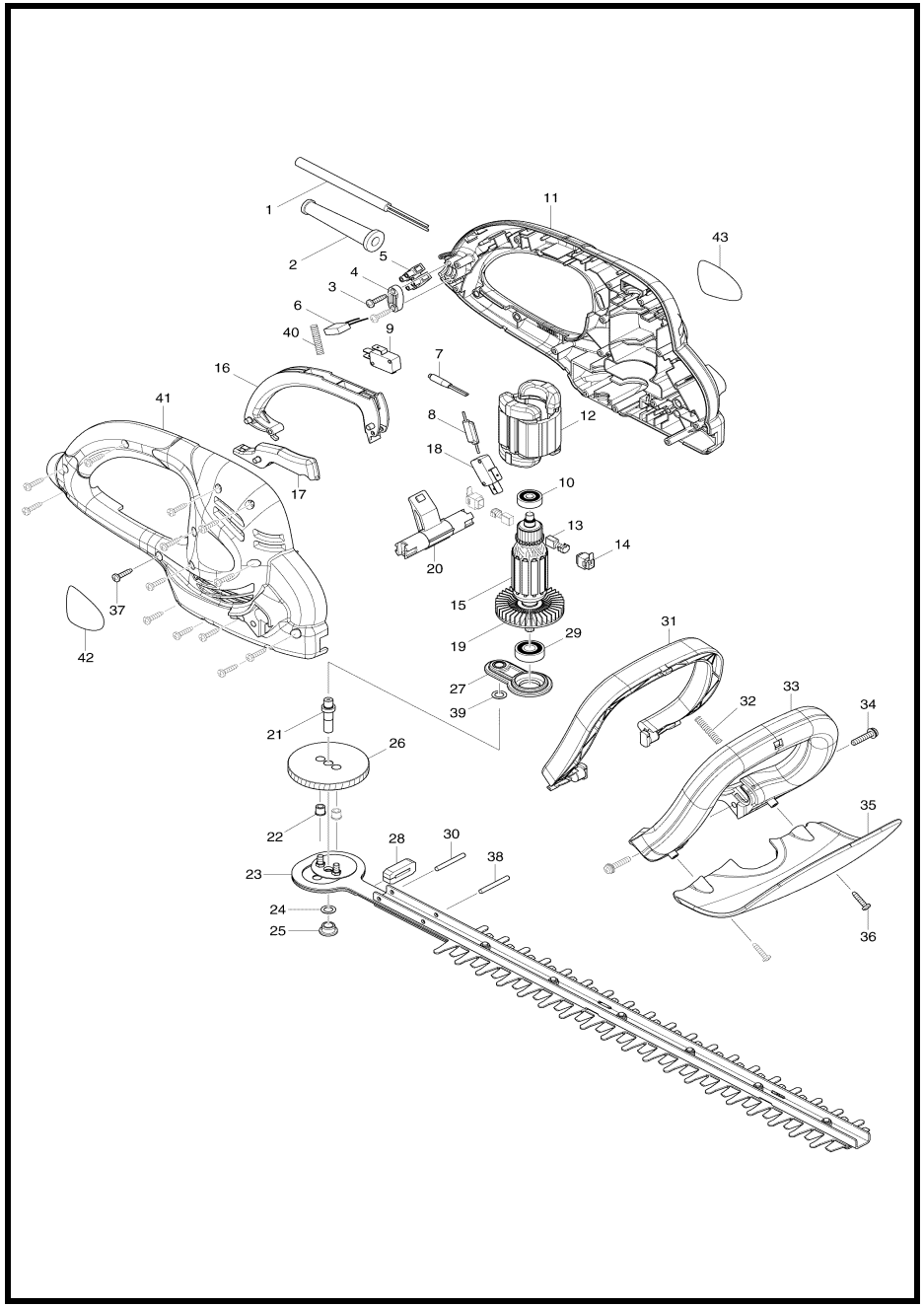

MODEL UH4861

ITEM	PARTS ID	DESCRIPTION	PRICE/BAHT
001	668160-0	POWER SUPPLY CORD 0.75-2-0.3	
002	682569-2	CORD GUARD 8-85	110
003	266326-2	TAPPING SCREW 4X18	30
004	687124-5	STRAIN RELIEF	70
005	654531-7	TERMINAL BLOCK 2P	190
009	650642-6	SWITCH	220
010	210030-5	BALL BEARING 627ZZ	150
011	187052-9	HOUSING SET	770
012	621753-4	FIELD 220-240V	
014	643923-5	BRUSH HOLDER	130
015	515823-8	ARMATURE ASS'Y 220V	
016	452677-1	SWITCH LEVER A	150
017	452680-2	SWITCH LEVER C	80
018	650642-6	SWITCH	220
020	452681-0	SWITCH ARM	130
021	326034-8	SPINDLE	180
022	262570-9	NYLON SLEEVE 5	50
023	140830-8	SHEAR BLADE COMPLETE	3,130
024	253777-8	FLAT WASHER 8	80
025	214064-0	PLANE BEARING 8	60
026	227745-7	HELICAL GEAR 67	480
027	140828-5	BEARING BOX COMPLETE	380
028	423417-4	DUST GUARD	110
029	211062-5	BALL BEARING 6000ZZ	360
030	268136-3	PIN 4	90
031	452678-9	SWITCH LEVER B	170
032	233156-6	COMPRESSION SPRING 5	20
033	452682-8	FRONT GRIP	360
034	911243-8	PAN HEAD SCREW M5X25	30
035	140829-3	PROTECTOR COMPLETE	310
036	266326-2	TAPPING SCREW 4X18	30
037	266326-2	TAPPING SCREW 4X18	30
038	268136-3	PIN 4	90
039	253777-8	FLAT WASHER 8	80
040	233156-6	COMPRESSION SPRING 5	20
041	187052-9	HOUSING SET	770
A01	194677-2	CORD HOLDER COMPLETE SET	190
A02	158024-1	HOOK COMPLETE	170
A03	452684-4	BLADE COVER	360
A04	661905-5	EXTENSION CORD 0.75-2-10.0	930

SERVICE DRAWING

MODEL NO. UH5261

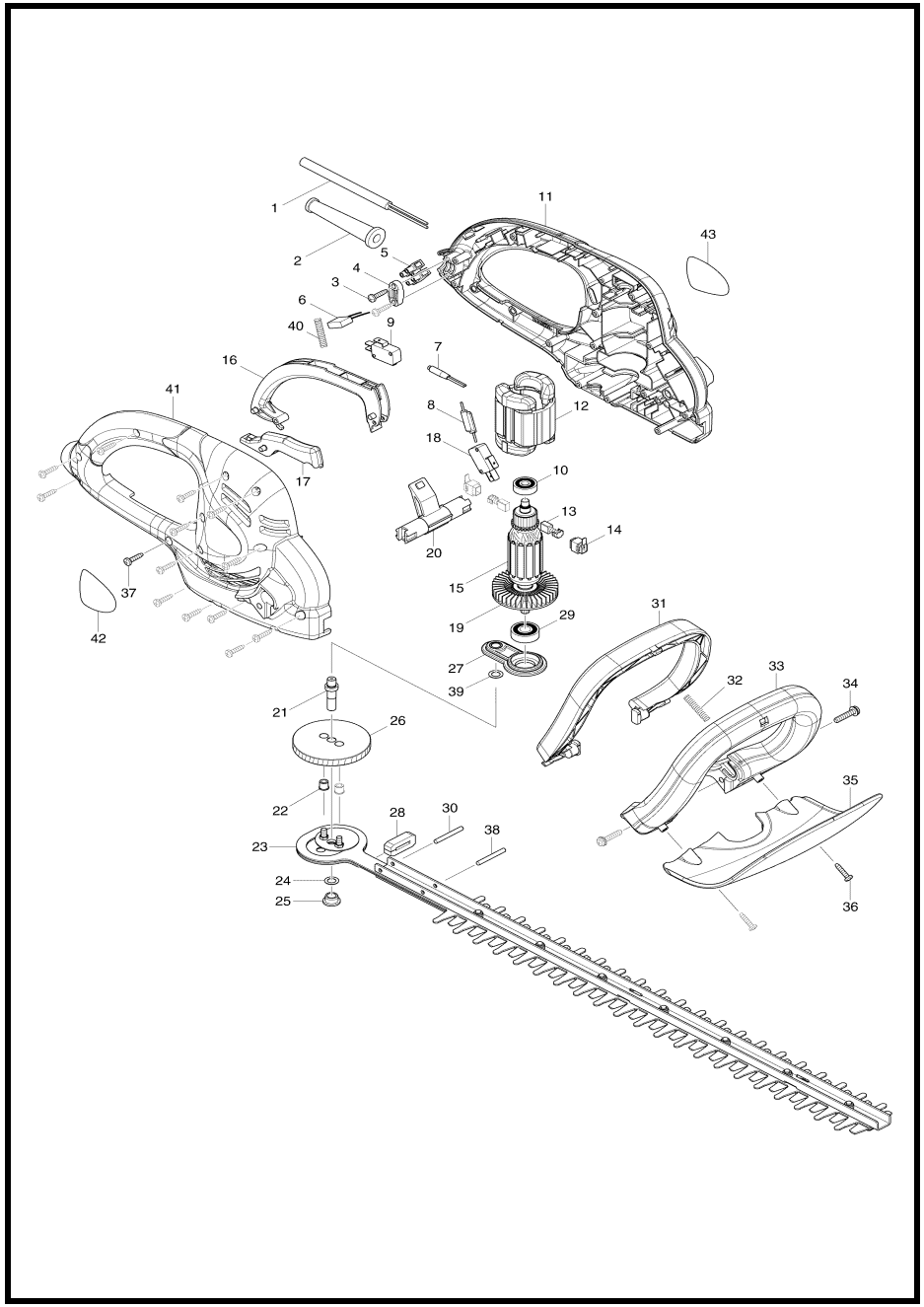

MODEL UH5261

ITEM	PARTS ID	DESCRIPTION	PRICE/BAHT
001	668160-0	POWER SUPPLY CORD 0.75-2-0.3	
002	682569-2	CORD GUARD 8-85	110
003	266326-2	TAPPING SCREW 4X18	30
004	687124-5	STRAIN RELIEF	70
005	654531-7	TERMINAL BLOCK 2P	190
009	650642-6	SWITCH	220
010	210030-5	BALL BEARING 627ZZ	150
011	187052-9	HOUSING SET	770
012	621753-4	FIELD 220-240V	
014	643923-5	BRUSH HOLDER	130
015	515823-8	ARMATURE ASS'Y 220V	
016	452677-1	SWITCH LEVER A	150
017	452680-2	SWITCH LEVER C	80
018	650642-6	SWITCH	220
020	452681-0	SWITCH ARM	130
021	326034-8	SPINDLE	180
022	262570-9	NYLON SLEEVE 5	50
023	140827-7	SHEAR BLADE COMPLETE	3,540
024	253777-8	FLAT WASHER 8	80
025	214064-0	PLANE BEARING 8	60
026	227745-7	HELICAL GEAR 67	480
027	140828-5	BEARING BOX COMPLETE	380
028	423417-4	DUST GUARD	110
029	211062-5	BALL BEARING 6000ZZ	360
030	268136-3	PIN 4	90
031	452678-9	SWITCH LEVER B	170
032	233156-6	COMPRESSION SPRING 5	20
033	452682-8	FRONT GRIP	360
034	911243-8	PAN HEAD SCREW M5X25	30
035	140829-3	PROTECTOR COMPLETE	310
036	266326-2	TAPPING SCREW 4X18	30
037	266326-2	TAPPING SCREW 4X18	30
038	268136-3	PIN 4	90
039	253777-8	FLAT WASHER 8	80
040	233156-6	COMPRESSION SPRING 5	20
041	187052-9	HOUSING SET	770
A01	194677-2	CORD HOLDER COMPLETE SET	190
A02	158024-1	HOOK COMPLETE	170
A03	452685-2	BLADE COVER	360
A04	661905-5	EXTENSION CORD 0.75-2-10.0	930

SERVICE DRAWING

MODEL NO. UM164D

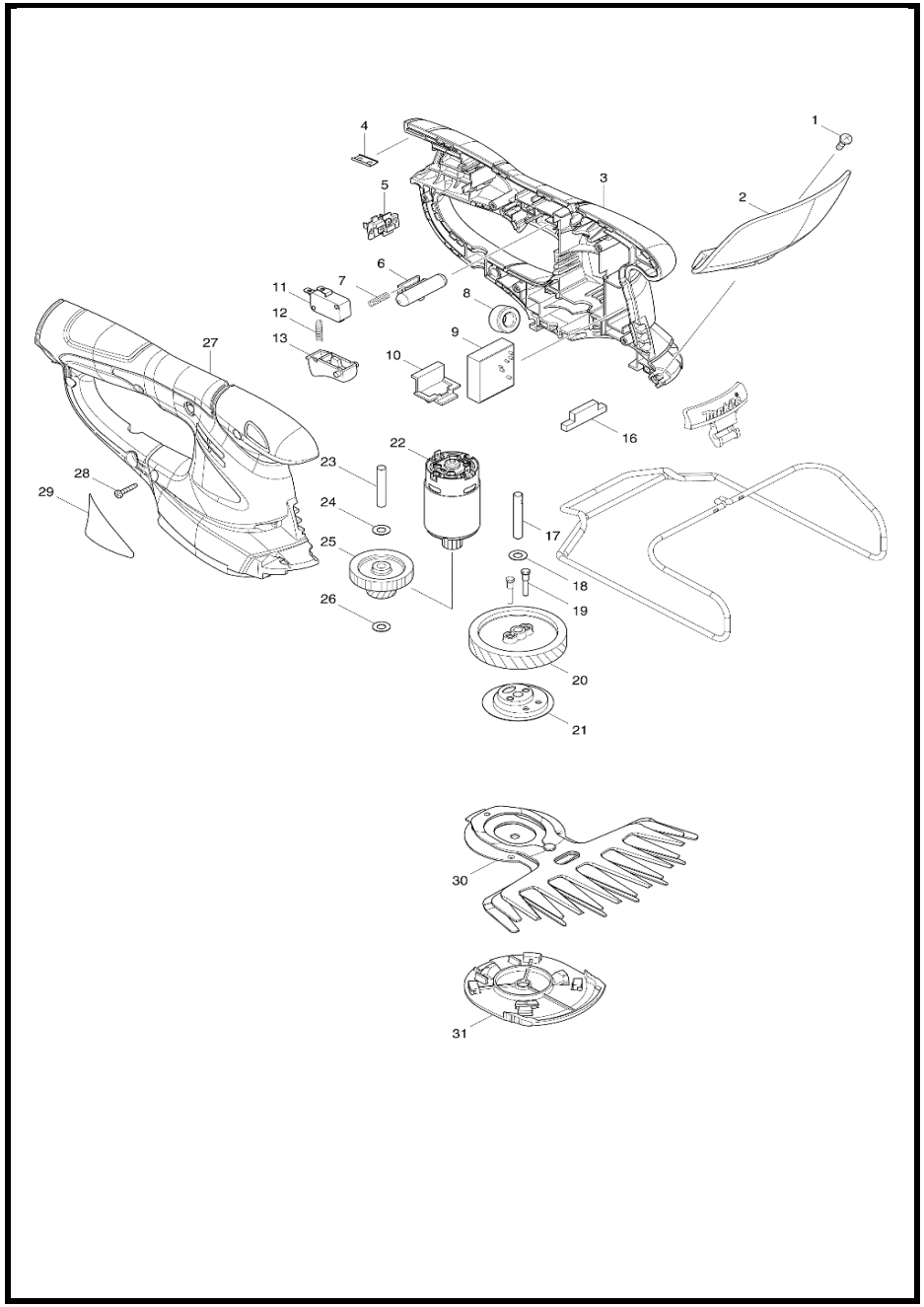

MODEL UM164D

ITEM	PARTS ID	DESCRIPTION	PRICE/BAHT
001	915116-7	BINDING HEAD SCREW M4X12	20
002	140599-4	PROTECTOR COMPLETE	180
003	188830-0	HOUSING SET	920
004	345998-7	SET PLATE	50
005	643817-4	TERMINAL	130
006	452438-9	LOCK OFF BUTTON	60
007	231473-8	COMPRESSION SPRING 4	50
009	135384-8	CONTROLLER ASSY	1,930
010	451812-8	LOCK LEVER	60
011	651944-3	SWITCH DMC-1115-13	200
012	231473-8	COMPRESSION SPRING 4	50
013	417564-1	SWITCH LEVER	40
016	451814-4	DUST GUARD	40
017	268254-7	PIN 6	90
018	261122-3	WASHER 6	40
019	268256-3	PIN 4	90
020	227728-7	HELICAL GEAR 47	140
021	165609-6	CRANK COMPLETE	360
022	629877-0	DC MOTOR	620
023	268076-5	PIN 6	70
024	261122-3	WASHER 6	40
025	226831-1	GEAR 12-31	130
026	261122-3	WASHER 6	40
027	188830-0	HOUSING SET	920
028	266429-2	TAPPING SCREW 3X16	50
030	195176-7	SHEAR BLADE ASSEMBLY SET	3,710
031	140451-6	UNDER COVER COMPLETE	150
A01	325896-1	BASE FRAME	450
A02	451813-6	CHANGE LEVER	90
A03	452055-5	BLADE COVER	320
A04	194550-6	BATTERY BL1013 SET	
A05	***DC10WA	DC10WA BATTERY CHARGER	3,150

SERVICE DRAWING

MODEL NO. UR3000

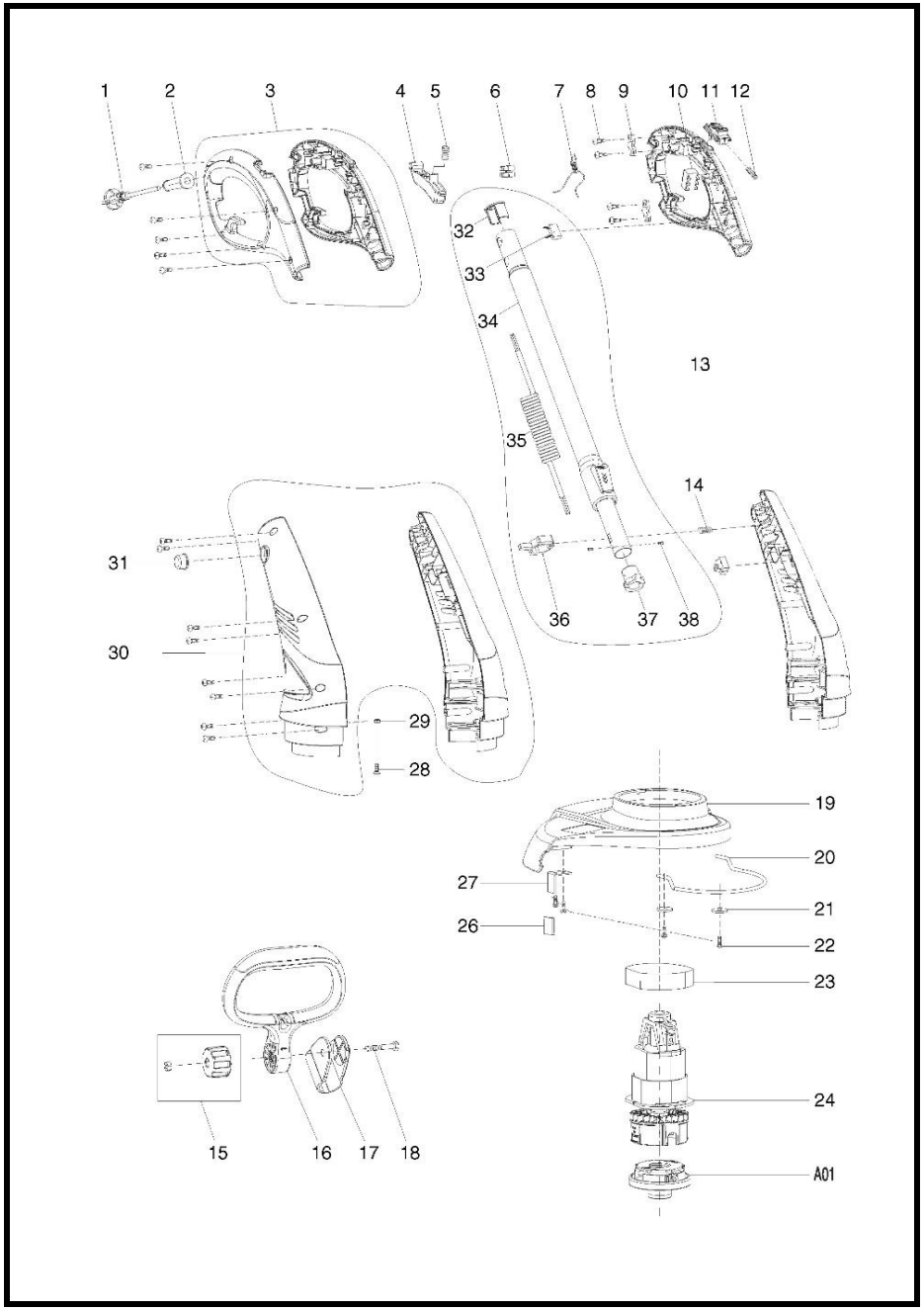

MODEL UR3000

ITEM	PARTS ID	DESCRIPTION	PRICE/BAHT
001	DA00000040	POWER SUPPLY CORD	340
002	DA00000041	CORD GUARD	90
003	DA00000042	HANDLE SET	670
004	DA00000008	SWITCH TRIGGER	120
005	DA00000009	SPRING	80
006	DA00000010	TERMINAL BLOCK	110
007	DA00000043	INTERNAL WIRE	180
008	DA00000012	SCREW ST4X16	40
009	DA00000013	CORD CLAMP	60
010	DA00000044	SWITCH	280
011	DA00000015	LOCK OFF LEVER	80
012	DA00000016	SPRING	80
013	DA00000017	PIPE SHAFT ASS'Y	1,630
014	DA00000018	SPRING	40
015	DA00000019	KNOB ASS'Y	140
016	DA00000045	LOOP HANDLE	460
017	DA00000046	LOOP HANDLE BASE	300
018	DA00000022	HEX BOLT M6X45	80
019	DA00000047	SAFETY COVER	610
020	DA00000024	GUARD	180
021	DA00000025	WASHER	60
022	DA00000026	SCREW ST4X12	40
023	DA00000027	MOTOR FORM RING	170
024	DA00000048	MOTOR	3,970
026	DA00000030	BLADE COVER	40
027	DA00000031	BLADE	130
028	DA00000032	SCREW M4X12	40
029	DA00000033	HEX NUT M4	40
030	DA00000049	MOTOR HOUSING SET	1,100
031	DA00000035	LOCK BUTTON	90
032	DA00000053	PIPE END	110
033	DA00000054	CAPACITANCE	150
034	DA00000055	TELESCOPIC TUBE	930
035	DA00000056	SPRING CABLE	440
036	DA00000057	ROTATING BRACKET	110
037	DA00000058	PIPE END	110
038	DA00000059	SCREW ST3X6	40
A01	DA00000001	SPOOL ASS'Y	700
A02	DA00000036	SAFETY GOGGLE	400
A03	DA00000037	SHOULDER BELT	340
A05	DA00000003	NYLON CORD	380

SERVICE DRAWING

MODEL NO. UT1305

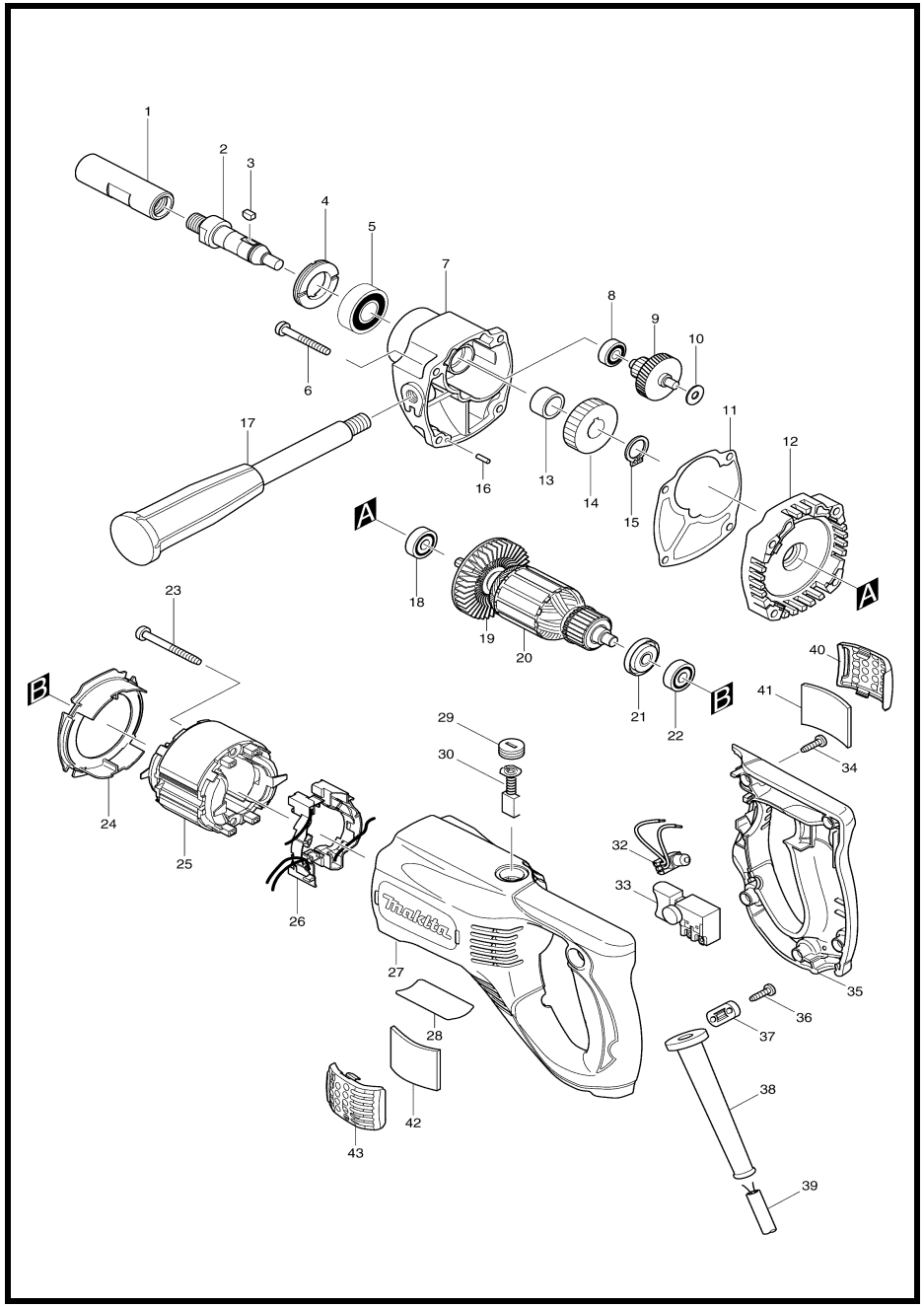

MODEL UT1305

ITEM	PARTS ID	DESCRIPTION	PRICE/BAHT
001	323962-8	SHAFT HOLDER	620
002	324259-8	SPINDLE	1,470
003	254011-9	WOODRUFF KEY 4	90
004	285807-7	BEARING RETAINER 22-36	170
005	211206-7	BALL BEARING 6202LLB	460
006	266211-9	TAPPING SCREW 5X40	60
007	317551-9	GEAR HOUSING	1,220
008	211021-9	BALL BEARING 607LLB	240
009	226153-9	GEAR COMPLETE 12-41	1,000
010	253804-1	FLAT WASHER 6	40
011	419528-1	GASKET	320
012	153386-2	GEAR HOUSING COVER COMPLETE	1,430
013	257719-4	SLEEVE 15	100
014	226559-1	HELICAL GEAR 34	730
015	961055-9	RETAINING RING S-15	50
016	256180-2	PIN 3	40
017	152892-4	GRIP COMPLETE	690
018	211031-6	BALL BEARING 608LLB	190
020	513653-1	ARMATURE ASS'Y 220V	
021	681644-1	INSULATION WASHER	60
022	211031-6	BALL BEARING 608LLB	190
023	266046-8	TAPPING SCREW 5X50	100
024	419417-0	BAFFLE PLATE	150
025	634553-3	FIELD 220V	
026	638439-3	SUPPORT COMPLETE	400
027	154874-2	MOTOR HOUSING COMPLETE	2,200
029	643750-0	BRUSH HOLDER CAP	70
030	B-80379	CARBON BRUSH SET CB-303A	190
032	631706-5	PILOT LAMP	490
033	650203-2	SWITCH SGEL115CD-1	390
034	265995-6	TAPPING SCREW 4X18	40
035	419416-2	HANDLE COVER	850
036	265995-6	TAPPING SCREW 4X18	40
037	687053-2	STRAIN RELIEF	70
038	682566-8	CORD GUARD 10	80
039	691015-4	POWER SUPPLY CORD 0.75-2-2.5	740
040	345691-3	COVER	450
041	423322-5	FILTER	50
042	423322-5	FILTER	50
043	345691-3	COVER	450
A01	A-43692	MIXING BLADE 165	780
A02	A-43751	SHAFT COMPLETE	1,720
A03	265220-5	HEX. BOLT M8X18	430
A04	781006-4	WRENCH 13	160
A05	781010-3	WRENCH 19	230

SERVICE DRAWING

MODEL NO. UT2204

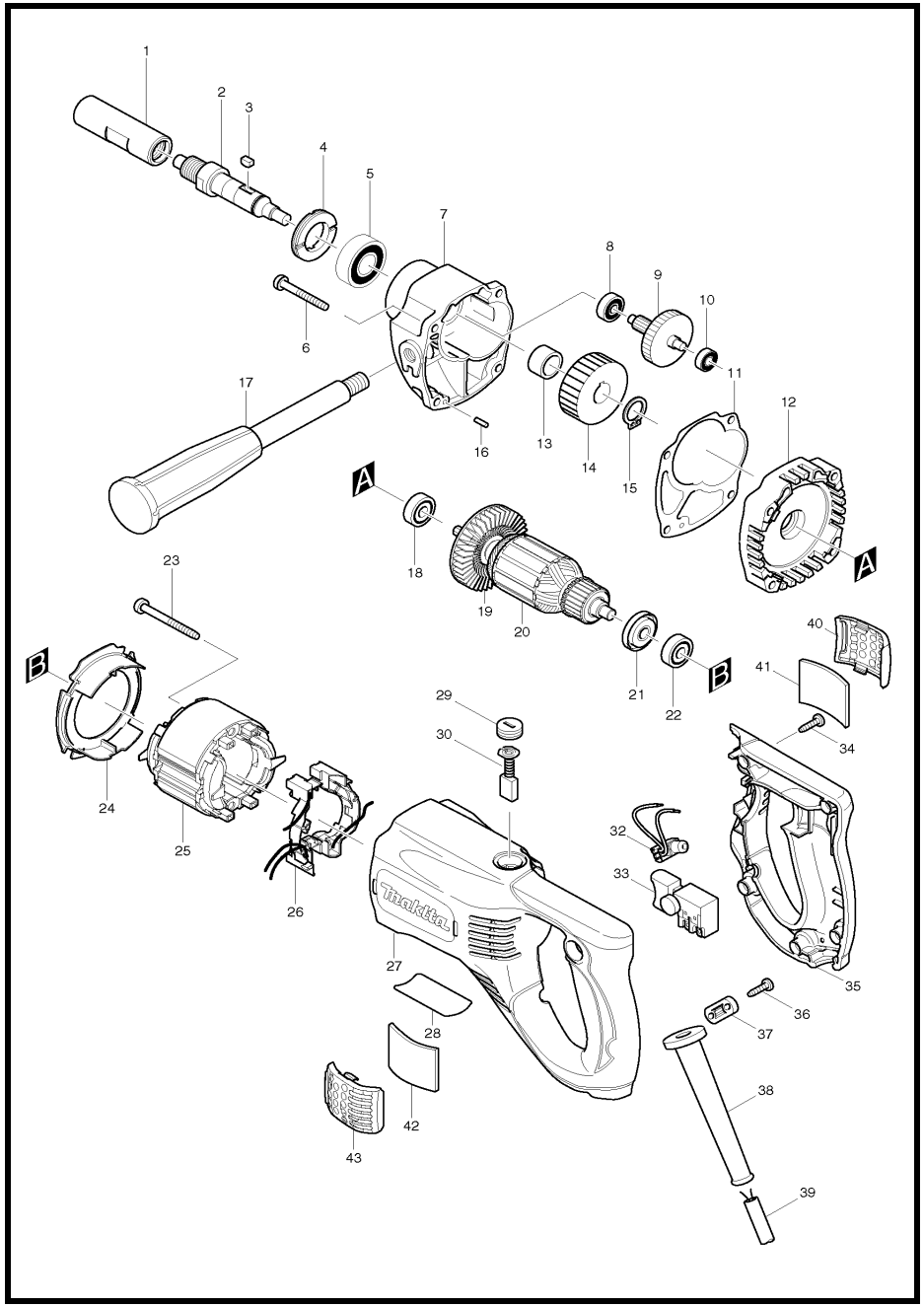

MODEL UT2204

ITEM	PARTS ID	DESCRIPTION	PRICE/BAHT
001	324265-3	SHAFT HOLDER	800
002	324273-4	SPINDLE	1,400
003	254011-9	WOODRUFF KEY 4	90
004	285807-7	BEARING RETAINER 22-36	170
005	211206-7	BALL BEARING 6202LLB	460
006	266211-9	TAPPING SCREW 5X40	60
007	317598-3	GEAR HOUSING	1,750
008	211016-2	BALL BEARING 626LLB	320
009	226826-4	GEAR COMPLETE 7-46	1,120
010	210006-2	BALL BEARING 696ZZ	310
011	419529-9	GASKET	320
012	153414-3	GEAR HOUSING COVER COMPLETE	1,380
013	257719-4	SLEEVE 15	100
014	226561-4	HERICAL GEAR 43	880
015	961055-9	RETAINING RING S-15	50
016	256180-2	PIN 3	40
017	152892-4	GRIP COMPLETE	690
018	211031-6	BALL BEARING 608LLB	190
020	513653-1	ARMATURE ASS'Y 220V	
021	681644-1	INSULATION WASHER	60
022	211031-6	BALL BEARING 608LLB	190
023	266046-8	TAPPING SCREW 5X50	100
024	419417-0	BAFFLE PLATE	150
025	634553-3	FIELD 220V	
026	638439-3	SUPPORT COMPLETE	400
027	154874-2	MOTOR HOUSING COMPLETE	2,200
029	643750-0	BRUSH HOLDER CAP	70
030	B-80379	CARBON BRUSH SET CB-303A	190
032	631706-5	PILOT LAMP	490
033	650203-2	SWITCH SGEL115CD-1	390
034	265995-6	TAPPING SCREW 4X18	40
035	419416-2	HANDLE COVER	850
036	265995-6	TAPPING SCREW 4X18	40
037	687053-2	STRAIN RELIEF	70
038	682566-8	CORD GUARD 10	80
039	691015-4	POWER SUPPLY CORD 0.75-2-2.5	740
040	345691-3	COVER	450
041	423322-5	FILTER	50
042	423322-5	FILTER	50
043	345691-3	COVER	450
A01	315113-7	MIXING BLADE	3,860
A02	A-43773	SHAFT COMPLETE	2,370
A03	265440-1	HEX. BOLT M8X16	100
A04	781006-4	WRENCH 13	160
A05	781010-3	WRENCH 19	230
A06	B-80151	CARBON BRUSH SET CB-303A	
A06	B-80379	CARBON BRUSH SET CB-303A	190